Fuel System

GENERAL

GASOLINE ENGINE CONTROL SYSTEM
- ENGINE CONTROL MODULE (ECM)
- ENGINE COOLANT TEMPERATURE SENSOR (ECTS)
- MASS AIR FLOW SENSOR (MAFS)
- INTAKE AIR TEMPERATURE (IAT) SENSOR
- CAMSHAFT POSITION SENSOR (CMPS)
- CRANKSHAFT POSITION SENSOR
- OXYGEN SENSOR (HO2S)
- KNOCK SENSOR (KS)
- ELECTRONIC THROTTLE SYSTEM (ETS)
- CONTINUOUS VARIABLE VALVE TIMING(CVVT) SYSTEM

DTC TROUBLESHOOTING PROCEDURES

FUEL DELIVERY SYSTEM
- FUEL LINE AND VAPOR LINE
- INJECTOR
- FUEL FILTER
- FUEL PUMP (FP)
- FUEL TANK

GENERAL

SPECIFICATION E2CEBD02

FUEL DELIVERY SYSTEM

Items	Specification	
Feul Tank	Capacity	70 lit (18.5U.S.gal, 15.4Imp.gal)
Fuel Return System	Type	Returnless
Fuel Filter	Type	High pressure type (Bulit in fuel pump assembly)
Fuel Pressure Regulator	Type	Bulit in fuel pump assembly
	Regulated Fuel Pressure	343 ± 5kpa (3.50 ± 0.05 kgf/㎠)
Fuel Pump	Type	Electrical, In-tank type
Fuel - Cut Engine Speed		6800rpm

INPUT SENSORS

MASS AIR FLOW SENSOR (MAFS)

▶ Type : Hot film type
▶ Specification

Test Condition	Output Voltage (V)	Mass Air Flow (kg/h)
Idle & No load	1.0 ~ 1.3	10 ~ 11
Idle & A/C ON	1.2 ~ 1.4	15 ~ 18

THROTTLE POSITION SERNSOR

▶ Type : Variable resistor type
▶ Specification

Test Condition	Output Voltage (V)
Close Throttle (TPS1)	0.3 ~ 0.7
Wide Open Throttle (TPS1)	4.45 ~ 4.85

Test Condition	Output Voltage (V)
Close Throttle (TPS2)	4.3 ~ 4.7
Wide Open Throttle (TPS2)	0.15 ~ 0.55

ACCELERATOR POSITION SENSOR

▶ Input Voltage : 4.8 ~ 5.2V

▶ Specification

Test Condition	APS1(V)	APS2(V)
Not depressed	0.58 ~ 0.93	0.29 ~ 0.36
Depressed fully	3.85 ~ 4.35	1.93 ~ 2.18

HEATED OXYGEN SENSOR (HO2S)

▶ Type: Zirconia sensor
▶ Output Voltage: 0 ~ 1V
▶ Specification(Heater)

Temperature ℃(℉)	Heater Resistance (Ω)	
	Front	Rear
18 ~ 28	3.3 ~ 4.1	3.3 ~ 4.1

INTAKE AIR TEMPERATURE SENSOR (IATS)

▶ Type: Thremistor type
▶ Specification

Temperature ℃(℉)	Resistance (kΩ)
-40(-40)	41.26 ~ 47.49
-10(14)	8.72 ~ 9.69
0(32)	5.50 ~ 6.05
10(50)	3.55 ~ 3.88
20(68)	2.35 ~ 2.54
30(86)	1.61 ~ 1.73

80(176)	0.31 ~ 0.32
130(266)	0.087

ENGINE COOLANT TEMPERATURE SENSOR (ECTS)

▶ Type: Thremistor type
▶ Specification

Temperature ℃(°F)	Resistance (kΩ)
-40(-40)	48.14
-20(-4)	14.13 ~ 16.83
0(32)	5.79
20(68)	2.31 ~ 2.59
40(104)	1.15
60(140)	0.59
80(176)	0.32
100(176)	0.19
110(176)	0.15
120(176)	0.12

CVVT OIL TEMPERATURE SENSOR (OTS)

▶ Type: Thremistor type
▶ Specification

Temperature ℃(°F)	Resistance (kΩ)
-40(-40)	52.15
-30(-22)	28.82
-10(-14)	9.80
0(32)	6
20(68)	2.45
40(104)	1.10
50(122)	0.77
60(140)	0.54
70(158)	0.39
90(194)	0.22
100(212)	0.16
110(230)	0.13
120(248)	0.1
130(266)	0.08
140(284)	0.06
150(302)	0.05

KNOCK SENSOR

▶ Type: Piezoelectric type

VEHICLE(or WHEEL) SPEED SENSOR

▶ Type: Inductive type

CAMSHAFT POSITION SENSOR (CMPS)

▶ Type: Hall effect sensor (Magnet Resistance Element type)
▶ Output voltage(V): 0 ~ 5

CRANKSHAFT POSITION SENSOR (CKPS)

▶ Type: Hall effect sensor
▶ Output voltage(V): 0 ~ 5

OUTPUT ACTUATORS

IDLE SPEED CONTROL ACTUATOR (ISCA)

▶ Type: Electromagnetic type
▶ Number: 4
▶ Specification

Temperature ℃(°F)	Resistance (kΩ)
20 (68)	13.8 ~ 15.2

PURGE CONTROL SOLENOID VALVE (PCSV)

▶ Type: Duty control typr
▶ Specification

Temperature ℃(°F)	Resistance (kΩ)
20 (68)	19 ~ 22

IGNITION COIL

▶ Type: Distibutorless Ignition type
▶ Specification

Temperature ℃(°F)	Resistance	
	Primary Coil (Ω)	Secondary Coil (kΩ)
20 (68)	0.56 ~ 0.68	6 ~8

ETS(ELECTRONIC THROTTLE SYSTEM) MOTOR

▶ Type: DC motor
▶ Specification

Temperature ℃(°F)	Resistance (Ω)
23 (73.4)	1.2 ~ 1.8

CVVT OIL CONTROL VALVE(OCV)

▶ Specification

Temperature ℃(℉)	**Resistance (Ω)**
0 (32)	6.2 ~ 7.4
20 (68)	6.8 ~ 8.0
40 (104)	7.4 ~ 8.6
60 (140)	8.0 ~ 9.2
80 (176)	8.6 ~ 9.8

SERVICE STANDARD E2B4E7BA

Basic Idle RPM (After warm up)	A/C OFF	650±100
	A/C ON	650±100
Ignition Timing(After warm up, at idle)	BTDC 10° ± 5°	

SEALANT

Engine Coolant Temperature Sensor(ECTS) assembly	LOCTITE 962T or equivalent

TIGHTENING TORQUE

ENGINE CONTROL SYSTEM

Items	N·m	kgf·m	lbf·ft
ECM Bracket Mounting Bolt	3.922 ~5.88	0.4 ~ 0.6	2.89 ~ 4.34
Heated Oxygen Sensor(Front)	34.32 ~ 44.13	3.5 ~ 4.5	25.32 ~ 32.55
Heated Oxygen Sensor(Rear)	34.32 ~ 44.13	3.5 ~ 4.5	25.32 ~ 32.55
Knock Sensor	16.67~25.5	1.7~2.6	12.3~18.8
Crankshaft Position Sensor (CKPS)	3.92 ~5.88	0.4 ~ 0.6	2.89 ~ 4.34
Camshaft Position Sensor (CMPS)	3.92 ~5.88	0.4 ~ 0.6	2.89 ~ 4.34
Engine Coolant Temperature Sensor (ECTS)	29.42 ~ 39.23	3.0~4.0	21.67 ~ 28.9
Mass Air Flow Sensor (MAFS)	3.92~5.88	0.4 ~ 0.6	2.89 ~ 4.34
CVVT Oil Temperature Sensor(OTS)	19.61~39.23	2.0~4.0	14.47~28.9
CVVT Oil Control Valve(OCV)	9.8~11.77	1.0~1.2	7.23~8.69
Ignition Coil	19.61~39.23	2.0~4.0	14.47~28.9
Purge Control Solenoid Valve(PCSV)	3.92 ~5.88	0.4 ~ 0.6	2.89 ~ 4.34

FUEL DELIVERY SYSTEM

Items	N·m	kgf·m	lbf·ft
	39.23 ~ 53.94	4.0 ~ 5.5	28.9 ~ 39.8
Delivery Pipe Mounting Bolt	19.61 ~ 24.52	2.0~2.5	14.47 ~ 18.08
Fuel Pump & Guage Plate Mounting Bolt	1.96 ~ 2.94	0.2~0.3	1.45 ~ 2.17
Two-way Valve Mounting Bolt	1.96 ~ 2.94	0.2~0.3	1.45 ~ 2.17

SPECIAL SERVICE TOOLS EA75BD2A

Tool (Number and name)	Illustration	Application
09353-24100 Fuel Pressure Gauge	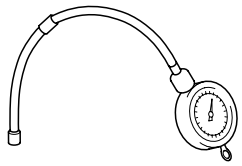 KFRE993A	Measuring the fuel line pressure
09353-38000 Fuel Pressure Gauge Adapter	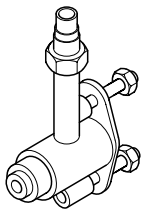 KFRE601A	Connecting between the delivery pipe and fuel feed line
09353-24000 Fuel Pressure Gauge Connector	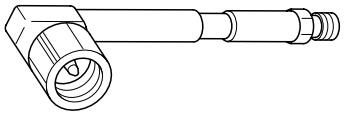 KFRE003C	Connecting between Fuel Pressure Gauge (09353-24100) and Fuel Pressure Gauge Adapter (09353-38000)

BASIC TROUBLESHOOTING EABEFE6B

BASIC TROUBLESHOOTING GUIDE

1	Bring Vehicle to Workshop

2	Analyze Customer's Problem

- Ask the customer about the conditions and environment relative to the issue (Use CUSTOMER PROBLEM ANALYSIS SHEET).

3	Verify Symptom, and then Check DTC and Freeze Frame Data

- Connect Hi-Scan (Pro) to Diagnostic Link Connector (DLC).
- Record the DTC and freeze frame data.

NOTE

To erase DTC and freeze frame data, refer to Step 5.

4	Confirm the Inspection Procedure for the System or Part

- Using the SYMPTOM TROUBLESHOOTING GUIDE CHART, choose the correct inspection procedure for the system or part to be checked.

5	Erase the DTC and Freeze Frame Data

WARNING

NEVER erase DTC and freeze frame data before completing Step 2 MIL/DTC in "CUSTOMER PROBLEM ANALYSIS SHEET".

6	Inspect Vehicle Visually

- Go to Step 11, if you recognize the problem.

7	Recreate (Simulate) Symptoms the DTC

- Try to recreate or simulate the symptoms and conditions of the malfunction as described by customer.
- If DTC(s) is/are displayed, simulate the condition according to troubleshooting procedure for the DTC.

8	Confirm Symptoms of Problem

- If DTC(s) is/are not displayed, go to Step 9.
- If DTC(s) is/are displayed, go to Step 11.

9	Recreate (Simulate) Symptom

- Try to recreate or simulate the condition of the malfunction as described by the customer.

10	Check the DTC

- If DTC(s) does(do) not occur, refer to INTERMITTENT PROBLEM PROCEDURE in BASIC INSPECTION PROCEDURE.
- If DTC(s) occur(s), go to Step 11.

11	Perform troubleshooting procedure for DTC

12	Adjust or repair the vehicle

13	Confirmation test

14	END

LW8F1001

CUSTOMER PROBLEM ANALYSIS SHEET

1. VEHICLE INFORMATION

(I) VIN:
(II) Production Date:
(III) Odometer Reading: (km)

2. SYMPTOMS

☐ Unable to start	☐ Engine does not turn over ☐ Incomplete combustion ☐ Initial combustion does not occur
☐ Difficult to start	☐ Engine turns over slowly ☐ Other_____
☐ Poor idling	☐ Rough idling ☐ Incorrect idling ☐ Unstable idling (High: _____ rpm, Low: _____rpm) ☐ Other _____
☐ Engine stall	☐ Soon after starting ☐ After accelerator pedal depressed ☐ After accelerator pedal released ☐ During A/C ON ☐ Shifting from N to D-range ☐ Other _____
☐ Others	☐ Poor driving (Surge) ☐ Knocking ☐ Poor fuel economy ☐ Back fire ☐ After fire ☐ Other _____

3. ENVIRONMENT

Problem frequency	☐ Constant ☐ Sometimes (_____) ☐ Once only ☐ Other _____
Weather	☐ Fine ☐ Cloudy ☐ Rainy ☐ Snowy ☐ Other _____
Outdoor temperature	Approx. _____ °C/°F
Place	☐ Highway ☐ Suburbs ☐ Inner City ☐ Uphill ☐ Downhill ☐ Rough road ☐ Other _____
Engine temperature	☐ Cold ☐ Warming up ☐ After warming up ☐ Any temperature
Engine operation	☐ Starting ☐ Just after starting (____ min) ☐ Idling ☐ Racing ☐ Driving ☐ Constant speed ☐ Acceleration ☐ Deceleration ☐ A/C switch ON/OFF ☐ Other _____

4. MIL/DTC

MIL (Malfunction Indicator Lamp)	☐ Remains ON ☐ Sometimes lights up ☐ Does not light
DTC	☐ Normal ☐ DTC (_____) ☐ Freeze Frame Data

BASIC INSPECTION PROCEDURE

MEASURING CONDITION OF ELECTRONIC PARTS' RESISTANCE

The measured resistance at high temperature after vehicle running may be high or low. So all resistance must be measured at ambient temperature (20°C, 68°F), unless there is any notice.

NOTE

The measured resistance in except for ambient temperature (20°C, 68°F) is reference value.

INTERMITTENT PROBLEM INSPECTION PROCEDURE

Sometimes the most difficult case in troubleshooting is when a problem symptom occurs but does not occur again during testing. An example would be if a problem appears only when the vehicle is cold but has not appeared when warm. In this case, technician should thoroughly make out a "CUSTOMER PROBLEM ANALYSIS SHEET" and recreate (simulate) the environment and condition which occurred when the vehicle was having the issue.

1. Clear Diagnostic Trouble Code (DTC).
2. Inspect connector connection, and check terminal for poor connections, loose wires, bent, broken or corroded pins, and then verify that the connectors are always securely fastened.

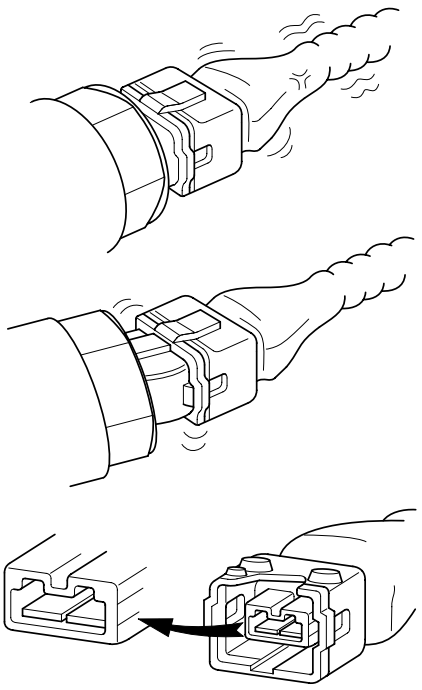

BFGE321A

3. Slightly shake the connector and wiring harness vertically and horizontally.
4. Repair or replace the component that has a problem.
5. Verify that the problem has disappeared with the road test.

● SIMULATING VIBRATION

a. Sensors and Actuators
: Slightly vibrate sensors, actuators or relays with finger.

WARNING

Strong vibration may break sensors, actuators or relays

b. Connectors and Harness
: Lightly shake the connector and wiring harness vertically and then horizontally.

● SIMULATING HEAT

a. Heat components suspected of causing the malfunction with a hair dryer or other heat sourre.

WARNING

- **DO NOT heat components to the point where they may be damaged.**
- **DO NOT heat the ECM directly.**

● SIMULATING WATER SPRINKLING

a. Sprinkle water onto vehicle to simulate a rainy day or a high humidity condition.

WARNING

DO NOT sprinkle water directly into the engine compartment or electronic components.

● SIMULATING ELECTRICAL LOAD

a. Turn on all electrical systems to simulate excessive electrical loads (Radios, fans, lights, etc.).

CONNECTOR INSPECTION PROCEDURE

1. Handling of Connector
   a. Never pull on the wiring harness when disconnecting connectors.

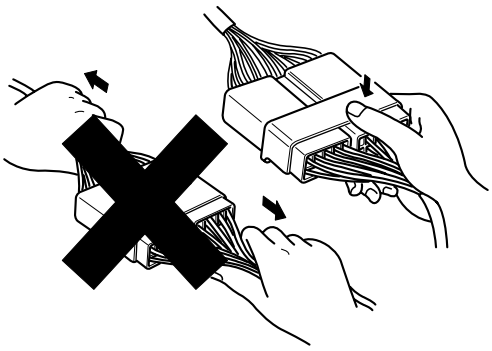

BFGE015F

   b. When removing the connector with a lock, press or pull locking lever.

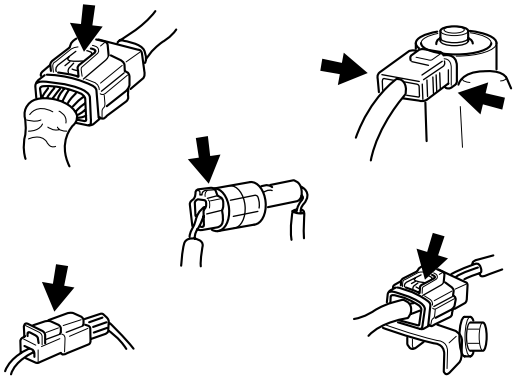

BFGE015G

   c. Listen for a click when locking connectors. This sound indicates that they are securely locked.

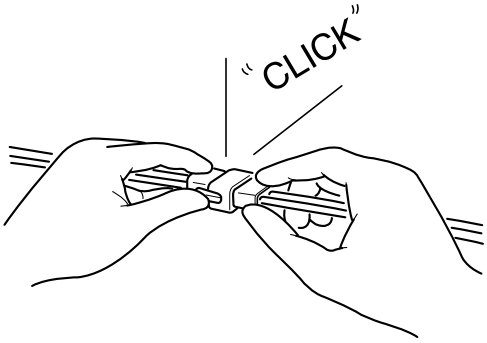

BFGE015H

   d. When a tester is used to check for continuity, or to measure voltage, always insert tester probe from wire harness side.

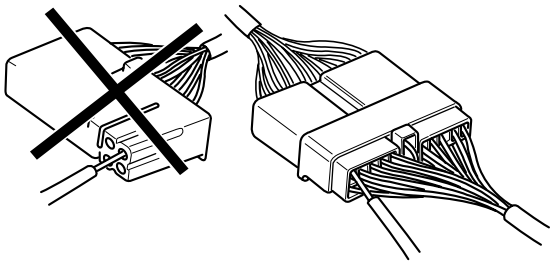

BFGE015I

   e. Check waterproof connector terminals from the connector side. Waterproof connectors cannot be accessed from harness side.

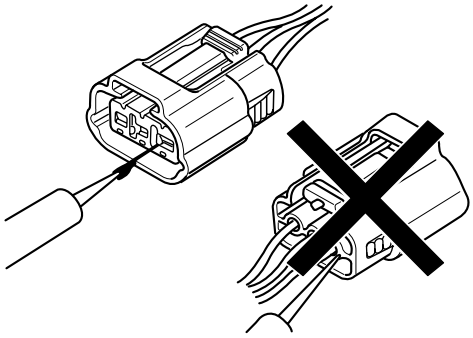

BFGE015J

NOTE

- *Use a fine wire to prevent damage to the terminal.*
- *Do not damage the terminal when inserting the tester lead.*

2. Checking Point for Connector
   a. While the connector is connected:
      Hold the connector, check connecting condition and locking efficiency.
   b. When the connector is disconnected:
      Check missed terminal, crimped terminal or broken core wire by slightly pulling the wire harness. Visually check for rust, contamination, deformation and bend.
   c. Check terminal tightening condition:
      Insert a spare male terminal into a female terminal, and then check terminal tightening conditions.

d. Pull lightly on individual wires to ensure that each wire is secured in the terminal.

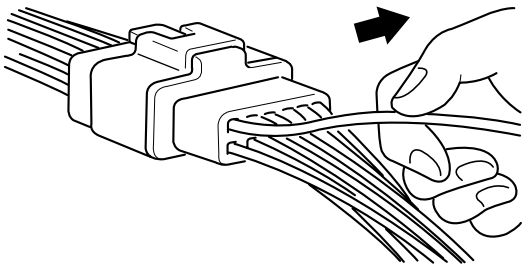

BFGE015K

3. Repair Method of Connector Terminal
   a. Clean the contact points using air gun and/or shop rag.

   NOTE

   Never use sand paper when polishing the contact points, otherwise the contact point may be damaged.

   b. In case of abnormal contact pressure, replace the female terminal.

WIRE HARNESS INSPECTION PROCEDURE

1. Before removing the wire harness, check the wire harness position and crimping in order to restore it correctly.
2. Check whether the wire harness is twisted, pulled or loosened.
3. Check whether the temperature of the wire harness is abnormally high.
4. Check whether the wire harness is rotating, moving or vibrating against the sharp edge of a part.
5. Check the connection between the wire harness and any installed part.
6. If the covering of wire harness is damaged; secure, repair or replace the harness.

ELECTRICAL CIRCUIT INSPECTION PROCEDURE

● CHECK OPEN CIRCUIT

1. Procedures for Open Circuit
   - Continuity Check
   - Voltage Check

If an open circuit occurs (as seen in [FIG. 1]), it can be found by performing Step 2 (Continuity Check Method) or Step 3 (Voltage Check Method) as shown below.

FIG 1

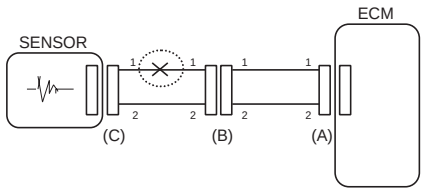

BFGE501A

2. Continuity Check Method

   NOTE

   When measuring for resistance, lightly shake the wire harness above and below or from side to side.

   Specification (Resistance)
   1Ω or less → Normal Circuit
   1MΩ or Higher → Open Circuit

   a. Disconnect connectors (A), (C) and measure resistance between connector (A) and (C) as shown in [FIG. 2].

      In [FIG.2.] the measured resistance of line 1 and 2 is higher than 1MΩ and below 1 Ω respectively. Specifically the open circuit is line 1 (Line 2 is normal). To find exact break point, check sub line of line 1 as described in next step.

FIG 2

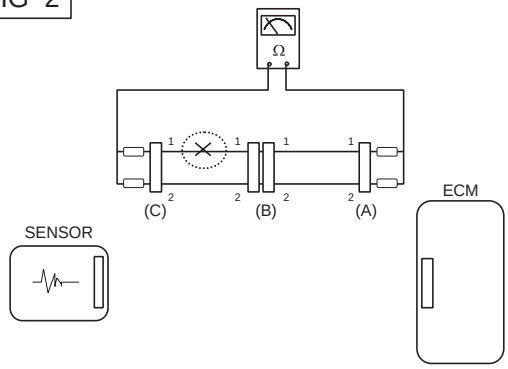

BFGE501B

   b. Disconnect connector (B), and measure for resistance between connector (C) and (B1) and between (B2) and (A) as shown in [FIG. 3].

In this case the measured resistance between connector (C) and (B1) is higher than 1MΩ and the open circuit is between terminal 1 of connector (C) and terminal 1 of connector (B1).

FIG 3

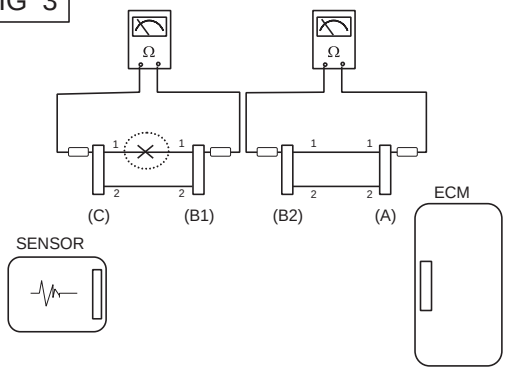

BFGE501C

3. Voltage Check Method
   a. With each connector still connected, measure the voltage between the chassis ground and terminal 1 of each connectors (A), (B) and (C) as shown in [FIG. 4].

      The measured voltage of each connector is 5V, 5V and 0V respectively. So the open circuit is between connector (C) and (B).

FIG 4

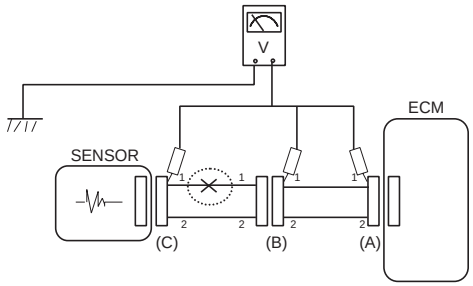

BFGE501D

● CHECK SHORT CIRCUIT

1. Test Method for Short to Ground Circuit
   - Continuity Check with Chassis Ground

If short to ground circuit occurs as shown in [FIG. 5], the broken point can be found by performing below Step 2 (Continuity Check Method with Chassis Ground) as shown below.

FIG 5

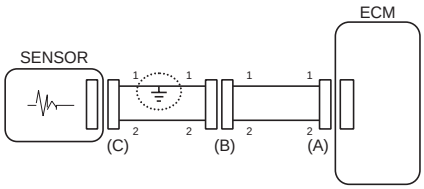

BFGE501E

2. Continuity Check Method (with Chassis Ground)

NOTE

Lightly shake the wire harness above and below, or from side to side when measuring the resistance.

Specification (Resistance)
1Ω or less → Short to Ground Circuit
1MΩ or Higher → Normal Circuit

a. Disconnect connectors (A), (C) and measure for resistance between connector (A) and Chassis Ground as shown in [FIG. 6].

   The measured resistance of line 1 and 2 in this example is below 1 Ω and higher than 1MΩ respectively. Specifically the short to ground circuit is line 1 (Line 2 is normal). To find exact broken point, check the sub line of line 1 as described in the folowing step.

FIG 6

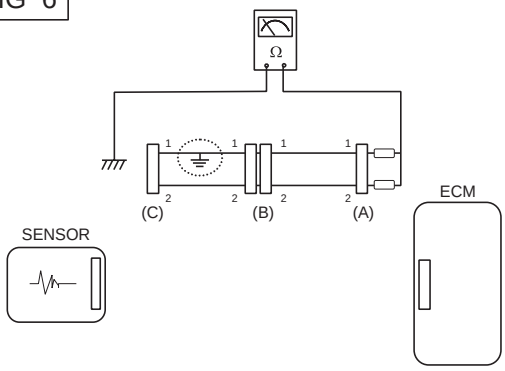

BFGE501F

b. Disconnect connector (B), and measure the resistance between connector (A) and chassis ground, and between (B1) and chassis ground as shown in [FIG. 7].

   The measured resistance between connector (B1) and chassis ground is 1Ω or less. The short to

ground circuit is between terminal 1 of connector (C) and terminal 1 of connector (B1).

FIG 7

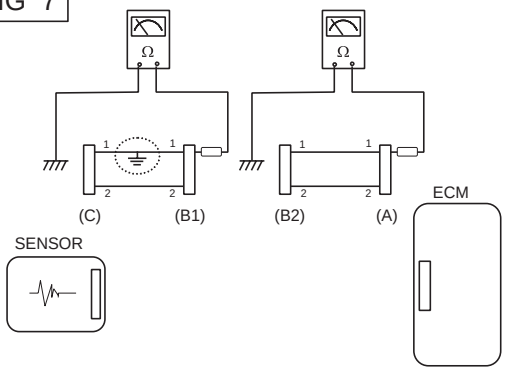

BFGE501G

SYMPTOM TROUBLESHOOTING GUIDE CHART

MAIN SYMPTOM	DIAGNOSTIC PROCEDURE	ALSO CHECK FOR
Unable to start (Engine does not turn over)	1. Test the battery 2. Test the starter 3. Inhibitor switch (A/T) or clutch switch (M/T)	
Unable to start (Incomplete combustion)	1. Test the battery 2. Check the fuel pressure 3. Check the ignition circuit 4. Troubleshooting the immobilizer system (In case of immobilizer lamp ON)	• DTC • Low compression • Intake air leaks • Slipped or broken timing belt • Contaminated fuel
Difficult to start	1. Test the battery 2. Check the fuel pressure 3. Check the ECT sensor and circuit (Check DTC) 4. Check the ignition circuit	• DTC • Low compression • Intake air leaks • Contaminated fuel • Weak ignition spark
Poor idling (Rough, unstable or incorrect Idle)	1. Check the fuel pressure 2. Check the Injector 3. Check the long term fuel trim and short term fuel trim (Refer to CUSTOMER DATASTREAM) 4. Check the ETS circuit (Check DTC) 5. Inspect and test the Throttle Body 6. Check the ECT sensor and circuit (Check DTC)	• DTC • Low compression • Intake air leaks • Contaminated fuel • Weak ignition spark
Engine stall	1. Test the Battery 2. Check the fuel pressure 3. Check the ETS circuit (Check DTC) 4. Check the ignition circuit 5. Check the CKPS Circuit (Check DTC)	• DTC • Intake air leaks • Contaminated fuel • Weak ignition spark
Poor driving (Surge)	1. Check the fuel pressure 2. Inspect and test Throttle Body 3. Check the ignition circuit 4. Check the ECT Sensor and Circuit (Check DTC) 5. Test the exhaust system for a possible restriction 6. Check the long term fuel trim and short term fuel trim (Refer to CUSTOMER DATASTREAM)	• DTC • Low compression • Intake air leaks • Contaminated fuel • Weak ignition spark
Knocking	1. Check the fuel pressure 2. Inspect the engine coolant 3. Inspect the radiator and the electric cooling fan 4. Check the spark plugs	• DTC • Contaminated fuel

MAIN SYMPTOM	DIAGNOSTIC PROCEDURE	ALSO CHECK FOR
Poor fuel economy	1. Check customer's driving habits • Is A/C on full time or the defroster mode on? • Are tires at correct pressure? • Is excessively heavy load being carried? • Is acceleration too much, too often? 2. Check the fuel pressure 3. Check the injector 4. Test the exhaust system for a possible restriction 5. Check the ECT sensor and circuit	• DTC • Low compression • Intake air leaks • Contaminated fuel • Weak ignition spark
Hard to refueling (Overflow during refueling)	1. Inspect the fuel filler hose/pipe • Pinched, kinked or blocked? • Filler hose is torn 2. Inspect the fuel tank vapor vent hose between the EVAP. canister and air filter 3. Check the EVAP. canister	• Malfunctioning gas station filling nozzle (If this problem occurs at a specific gas station during refueling)

GASOLINE ENGINE CONTROL SYSTEM

DESCRIPTION E208FFDD

If the Gasoline Engine Control system components (sensors, ECM, injector, etc.) fail, interruption to the fuel supply or failure to supply the proper amount of fuel for various engine operating conditions will result. The following situations may be encountered.

1. Engine is hard to start or does not start at all.
2. Unstable idle.
3. Poor driveability

If any of the above conditions are noted, first perform a routine diagnosis that includes basic engine checks (ignition system malfunction, incorrect engine adjustment, etc.). Then, inspect the Gasoline Engine Control system components with the HI-SCAN (Pro).

NOTE

- *Before removing or installing any part, read the diagnostic trouble codes and then disconnect the battery negative (-) terminal.*
- *Before disconnecting the cable from battery terminal, turn the ignition switch to OFF. Removal or connection of the battery cable during engine operation or while the ignition switch is ON could cause damage to the ECM.*
- *The control harnesses between the ECM and heated oxygen sensor are shielded with the shielded ground wires to the body in order to prevent the influence of ignition noises and radio interference. When the shielded wire is faulty, the control harness must be replaced.*
- *When checking the generator for the charging state, do not disconnect the battery '+' terminal to prevent the ECM from damage due to the voltage.*
- *When charging the battery with the external charger, disconnect the vehicle side battery terminals to prevent damage to the ECM.*

MALFUNCTION INDICATOR LAMP (MIL)

[EOBD]

A malfunction indicator lamp illuminates to notify the driver that there is a problem with the vehicle. However, the MIL will go off automatically after 3 subsequent sequential driving cycles without the same malfunction. Immediately after the ignition switch is turned on (ON position - do not start), the MIL will illuminate continuously to indicate that the MIL operates normally.

Faults with the following items will illuminate the MIL.

- Catalyst
- Fuel system
- Mass Air Flow Sensor (MAFS)
- Intake Air Temperature Sensor (IATS)
- Engine Coolant Temperature Sensor (ECTS)
- Throttle Position Sensor (TPS)
- Upstream Oxygen Sensor
- Upstream Oxygen Sensor Heater
- Downstream Oxygen Sensor
- Downstream Oxygen Sensor Heater
- Injector
- Misfire
- Crankshaft Position Sensor (CKPS)
- Camshaft Position Sensor (CMPS)
- Evaporative Emission Control System
- Vehicle Speed Sensor (VSS)
- Idle Speed Control Actuator (ISCA)
- Power Supply
- ECM
- MT/AT Encoding
- Acceleration Sensor
- MIL-on Request Signal
- Power Stage

NOTE

Refer to "INSPECTION CHART FOR DIAGNOSTIC TROUBLE CODES (DTC)" for more information.

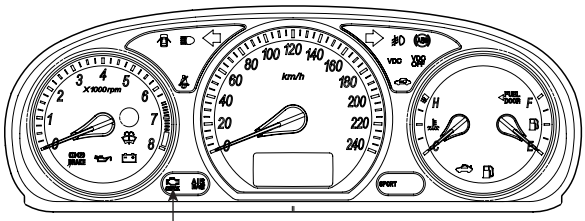

EFRF601P

[NON-EOBD]

A malfunction indicator lamp illuminates to notify the driver that there is a problem with the vehicle. However, the MIL will go off automatically after 3 subsequent sequential driving cycles without the same malfunction. Immediately after the ignition switch is turned on (ON position - do not start), the MIL will illuminate continuously to indicate that the MIL operates normally.

Faults with the following items will illuminate the MIL

- Heated oxygen sensor (HO2S)
- Mass Air Flow sensor (MAFS)

- Throttle position sensor (TPS)
- Engine coolant temperature sensor (ECTS)
- Idle speed control actuator (ISCA)
- Injectors
- ECM

NOTE

Refer to "INSPECTION CHART FOR DIAGNOSTIC TROUBLE CODES (DTC)" for more information.

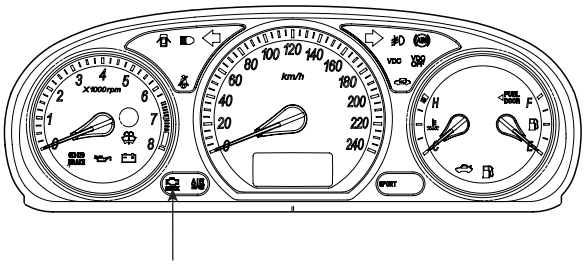

EFRF601P

[INSPECTION]

1. After turning ON the ignition key, ensure that the light illuminates for about 5 seconds and then goes out.

2. If the light does not illuminate, check for an open circuit in the harness, a blown fuse or a blown bulb.

SELF-DIAGNOSIS

The ECM monitors the input/output signals (some signals at all times and the others under specified conditions). When the ECM detects an irregularity, it records the diagnostic trouble code, and outputs the signal to the Data Link connector. The diagnosis results can be read with the MIL or HISCAN (Pro). Diagnostic Trouble Codes (DTC) will remain in the ECM as long as battery power is maintained. The diagnostic trouble codes will, however, be erased when the battery terminal or ECM connector is disconnected, or by the HI-SCAN (Pro).

NOTE

If a sensor connector is disconnected with the ignition switch turned on, the diagnostic trouble code (DTC) is recorded. In this case, disconnect the battery negative terminal (-) for 15 seconds or more, and the diagnosis memory will be erased.

THE RELATION BETWEEN DTC AND DRIVING PATTERN IN EOBD SYSTEM

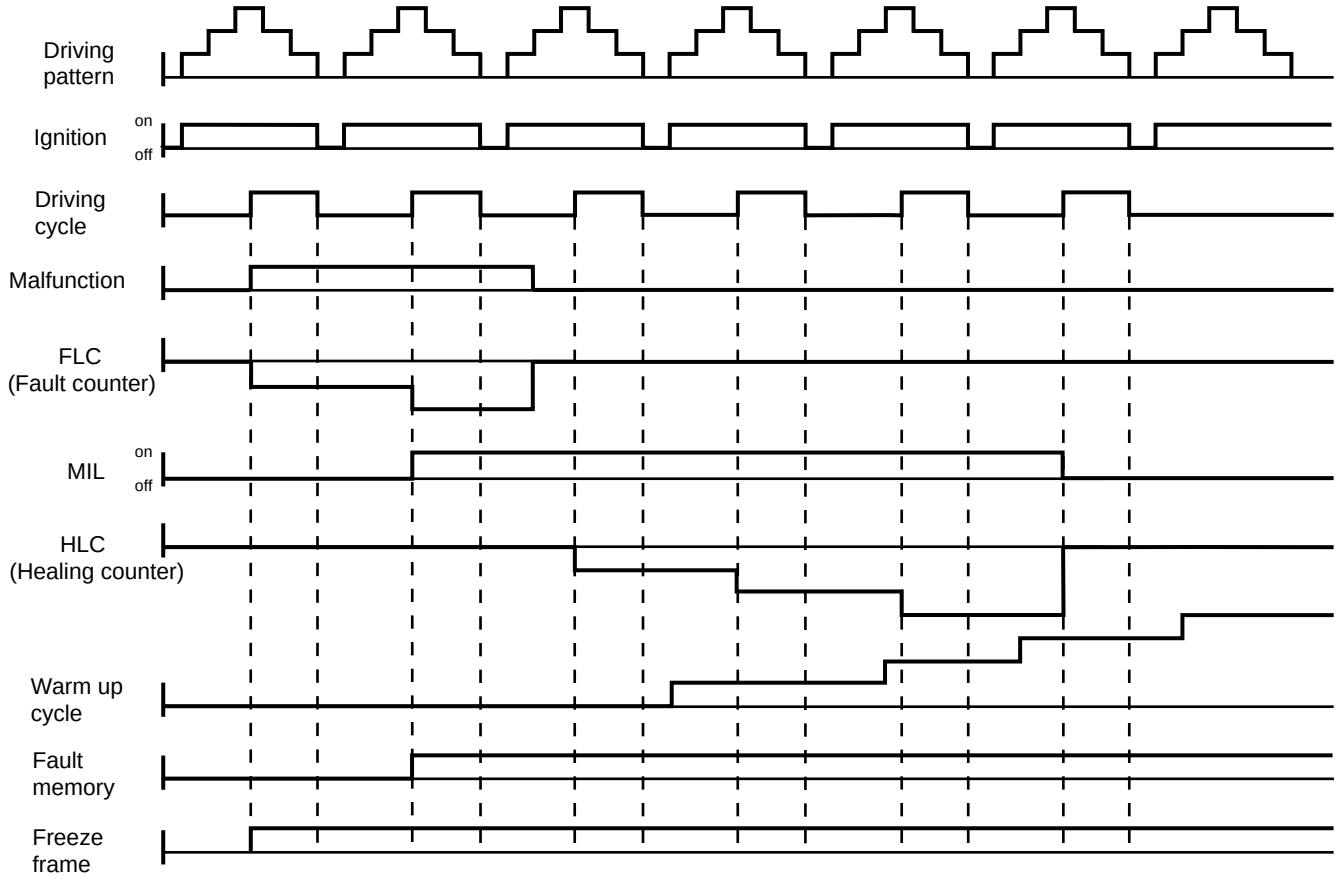

LGGE150A

1. When the same malfunction is detected and maintained during two sequential driving cycles, the MIL will automatically illuminate.

2. The MIL will go off automatically if no fault is detected after 3 sequential driving cycles.

3. A Diagnostic Trouble Code(DTC) is recorded in ECM memory when a malfunction is detected after two sequential driving cycles. The MIL will illuminate when the malfunction is detected on the second driving cycle. If a misfire is detected, a DTC will be recorded, and the MIL will illuminate, immediately after a fault is first detected.

4. A Diagnostic Trouble Code(DTC) will automatically erase from ECM memory if the same malfunction is not detected for 40 driving cycles.

FAIL-SAFE CHART

Items	Fail-Safe operation
Mass Air Flow Sensor(MAFS)	Replace it with TPS
Throttle Position Sensor(TPS)	Replace it with MAFS
Intake Air Temperature Sensor(IATS)	Replace it with ECTS
Engine Control Temperature Sensor(ECTS)	Replace it with IATS
Camshaft Position Sensor(CMPS)	Riding enabled/Starting enabled/Knocking control prohibited
Crankshaft Position Sensor(CKPS)	Engine stall on riding, Restart enabled(50%)
Oxygen Sensor	Open loop control
Idle Speed control Actuator(ISA)	Poor idling, Engine stall, RPM rising
Electronic Throttle System(ETS)	RPM above 1600rpm prohibited
Knock Sensor	Knocking control disabled
Injector	Poor idling, Engine stall
Ignition Coil	Poor idling, Engine stall

ACTUATOR TEST

The ACTUATOR TEST mode is to check if the relay, valve, actuator and so on are operated normally.
Before removing parts to inspect or replace them, performing the Actuator test is recommanded.
Perform the ACTUATOR TEST according to the below procedures.

1. Warm up the engine.
2. Turn the ignition switch OFF.
3. Connect the Hi-Scan(or Pro) to the DLC connector.
4. Turn the ignition switch ON.
5. According to the display on tester, select the ACTUATOR TEST mode and perform it.

ITEMS	TEST METHOD	TEST CONDITION
Injector (Cyl.1)	Stop operating	Engine run
Injector (Cyl.2)	Stop operating	Engine run
Injector (Cyl.3)	Stop operating	Engine run
Injector (Cyl.4)	Stop operating	Engine run
MIL(Engine check)	Operating by force	IG ON/Engine stop
Fuel pump relay	Operating by force	IG ON/Engine stop
A/C compressor relay	Operating by force	IG ON/Engine stop
Fan relay(High)	Operating by force	IG ON/Engine stop
Fan relay(Low)	Operating by force	IG ON/Engine stop
Main relay	Operating by force	IG ON/Engine stop
Purge control solenoid valve(PCSV)	Operating by force	IG ON/Engine stop
IG coil(Cyl.1)	Operating by force	IG ON/Engine stop
IG coil(Cyl.2)	Operating by force	IG ON/Engine stop
IG coil(Cyl.3)	Operating by force	IG ON/Engine stop
IG coil(Cyl.4)	Operating by force	IG ON/Engine stop
Cooling PWM 제어	Operating by force	IG ON/Engine stop
Electronic throttle control motor	Operating by force	IG ON/Engine stop

SCHEMATIC DIAGRAM E656BAC5

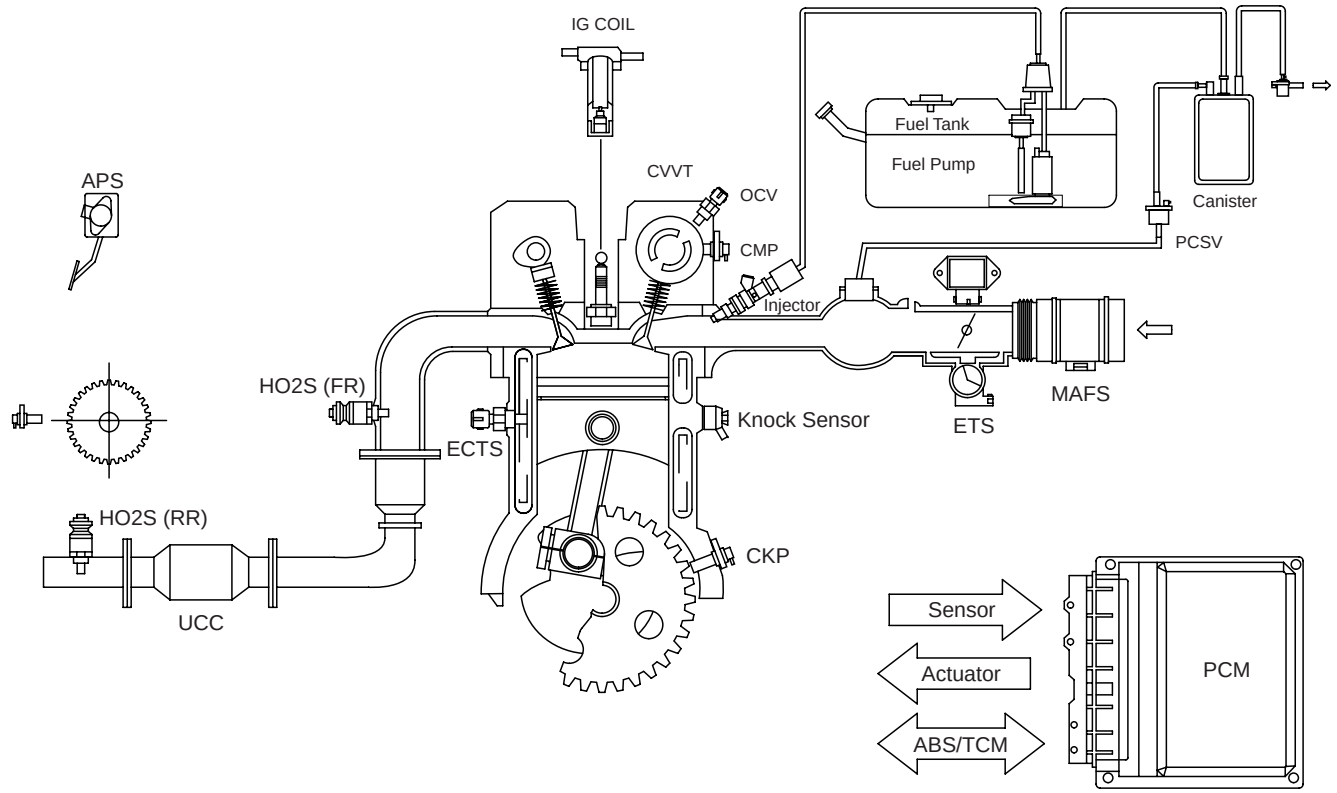

Acclerator Position Sensor (APS) Mass Air Flow Sensor (MAFS) Intake Air Temp. Sensor (IATS) Engine Coolant Temp. Sensor (ECTS) Crankshaft Position Sensor (CKPS) Camshaft Position Sensor (CMPS) Knock Sensor Heated Oxygen Sensor (Front) Heated Oxygen Sensor (Rear) CVVT Oil Temp. Sensor (OTS) Wheel Speed Sensor or Vehicle Speed Sensor	→	E C M	→	Injector Ignition Coil ETS Motor CVVT Oil Control Valve (OCV) Purge Control Solenoid Valve (PCSV)

EFRF084A

COMPONENTS LOCATION E8C2BBFB

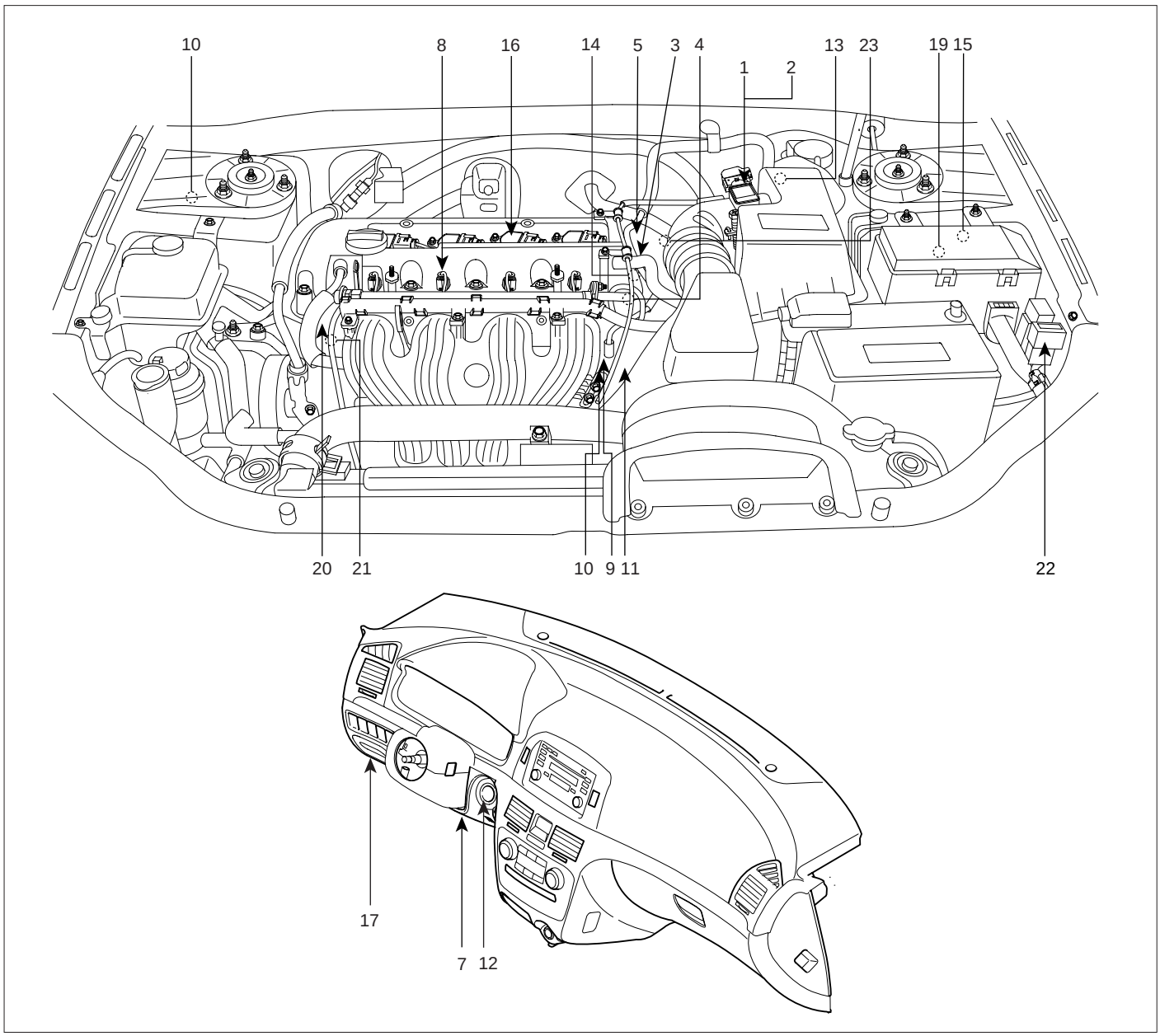

1. Mass Air Flow Sensor (MAFS)
2. Intake Air Temperature Sensor (IATS)
3. Engine Coolant Temperature Sensor (ECTS)
4. Camshaft Position Sensor (CMPS)
5. Crankshaft Position Sensor (CKPS)
6. Heated Oxygen Sensor (Front)
7. Accelerator Position Sensor (APS)
8. Injector
9. Electronic Throttle Body
10. Wheel Speed Sensor (WSS)
11. Knock Sensor
12. Ignition Switch
13. Engine Control Moduel (ECM)
14. Purge Control Solenoid Valve (PCSV)
15. Main Relay
16. Ignition Coil
17. Data Link Connector (DLC)
18. Heated Oxygen Sensor (Rear)
19. Fuel Pump Relay
20. CVVT Oil Control Valve (OCV)
21. CVVT Oil Temperature Sensor (OTS)
22. Multi-purpose Check Connector
23. Vehicle Speed Sensor (VSS)

EFRF001E

[1] Mass Air Flow Sensor (MAFS)
[2] Intake Air Temperature Sensor (IATS)

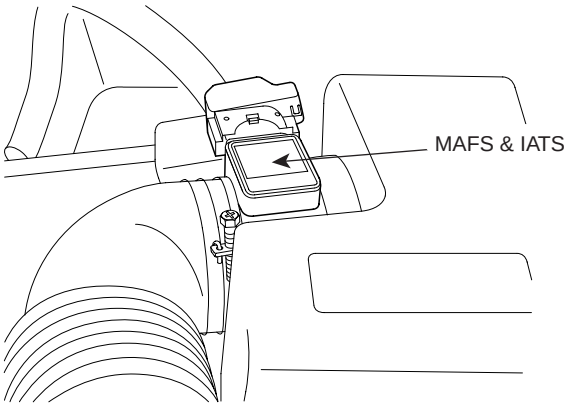

KFRE016E

[3] Engine Coolant Temperature Sensor (ECTS)

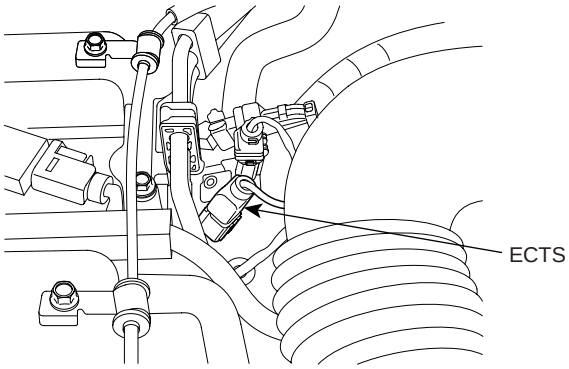

KFRE009B

[4] Camshaft Position Sensor (CMPS)

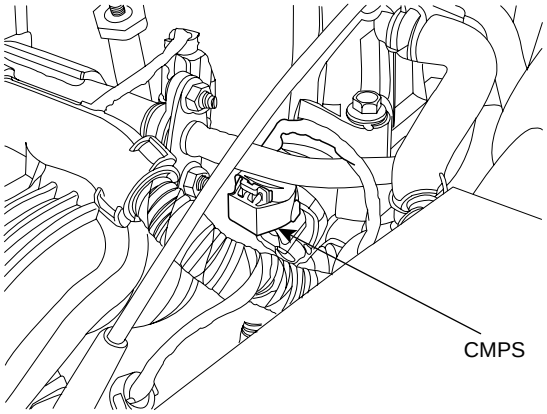

KFRE006B

[5] Crankshaft Position Sensor (CKPS)

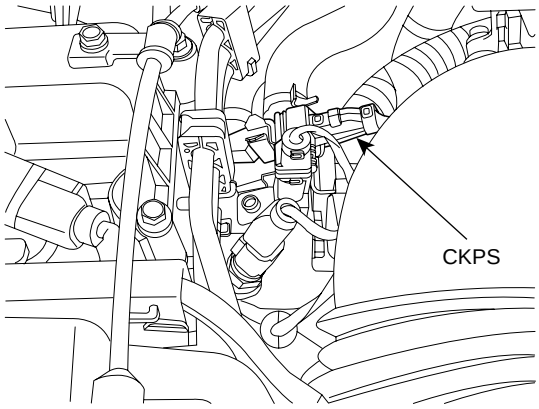

KFRE005B

[6] Heated Oxygen Sensor (Front)

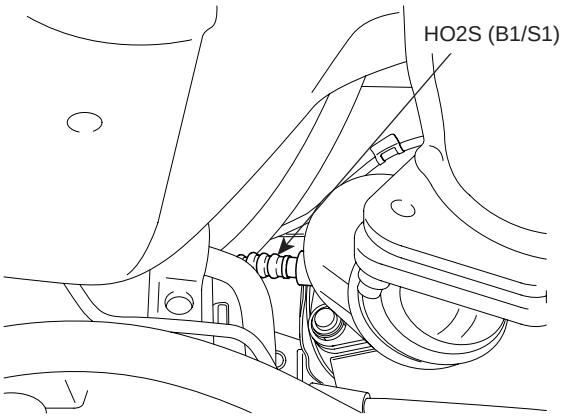

EFRF011B

[7] Injector

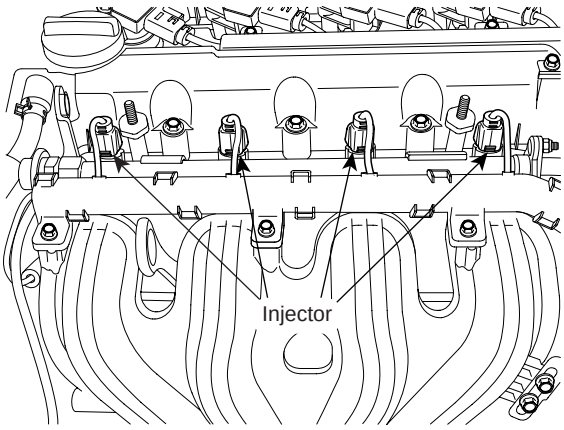

KFRE013B

[10] Wheel Speed Sensor (WSS)

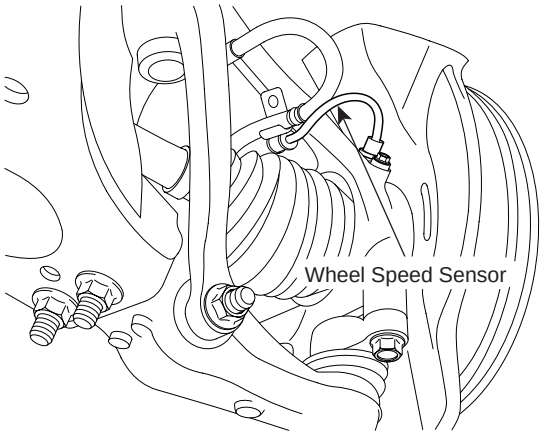

EFRF042B

[11] Knock Sensor (KS)

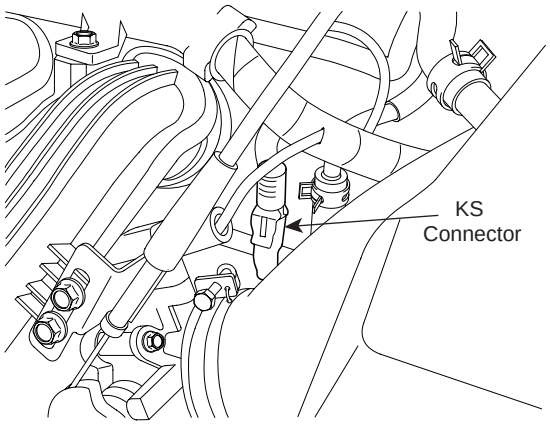

EFRF014B

[13] ECM

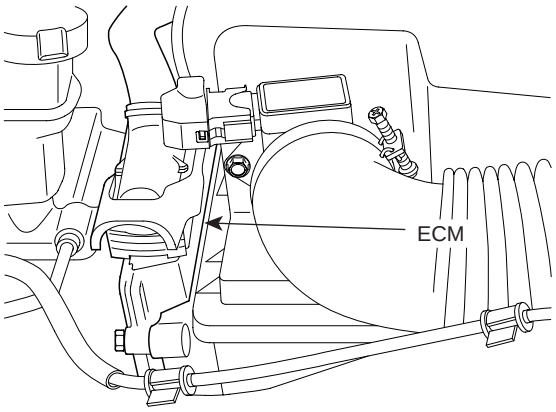

KFRE008B

[14] Purge Control Solenoid Valve (PCSV)

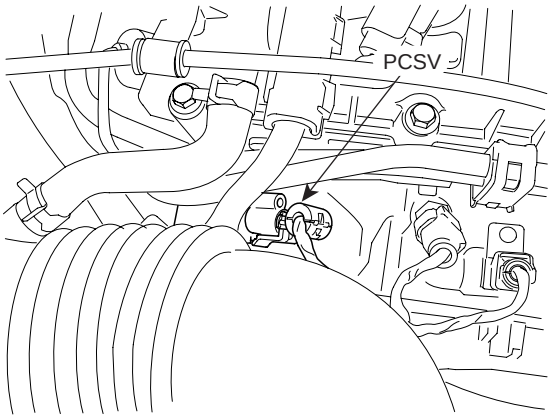

KFRE020B

[16] Ignition Coil

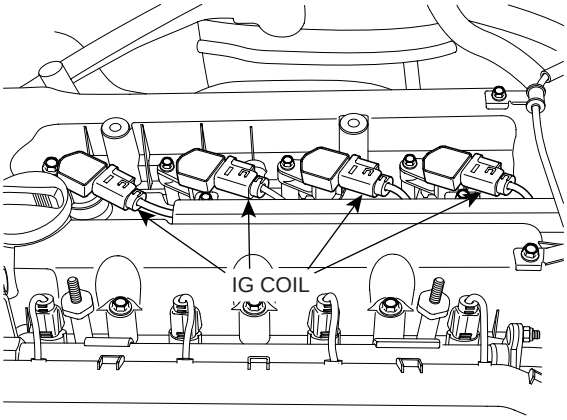

KFRE012B

[15] Main Relay
[19] Fuel Pump Relay

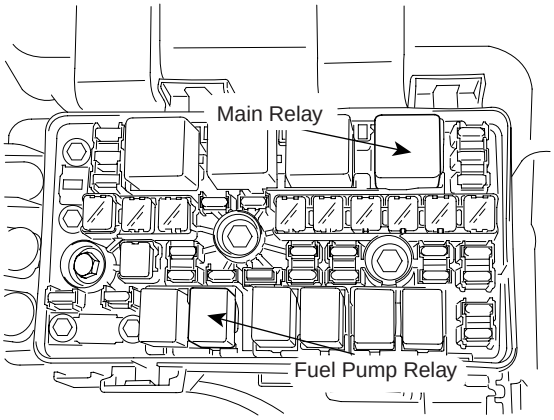

EFRF019B

[9] Electronic Throttle Body

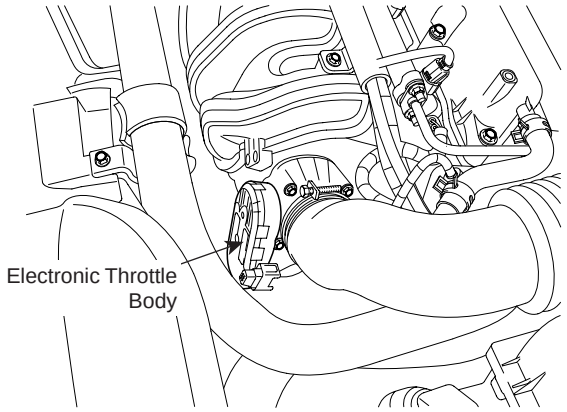

EFRF047B

[7] Accelerator Position Sensor (APS)

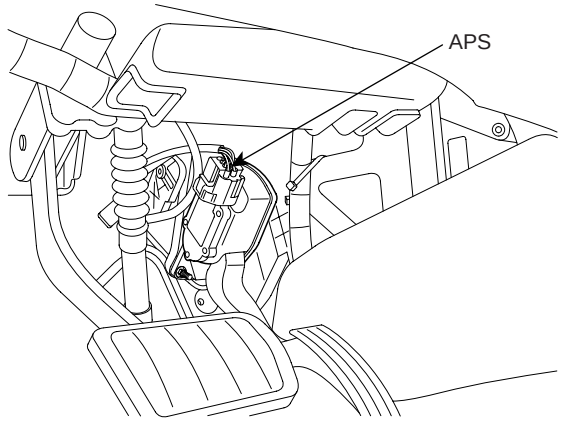

KFRE044B

[20] CVVT Oil Control Valve (OCV)

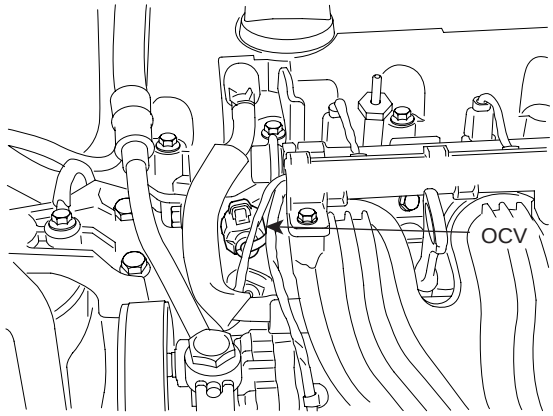

KFRE021B

[21] CVVT Oil Temperature Sensor (OTS)

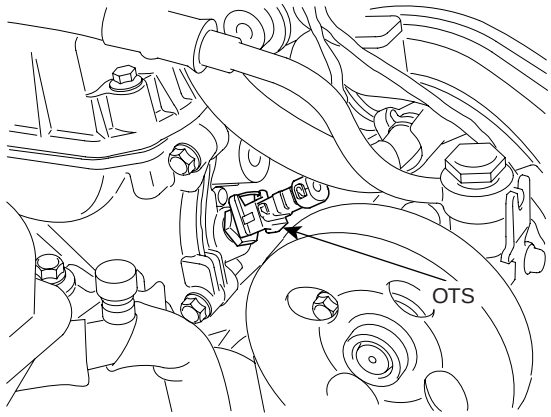

KFRE017B

[18] Heated Oxygen Sensor (Rear)

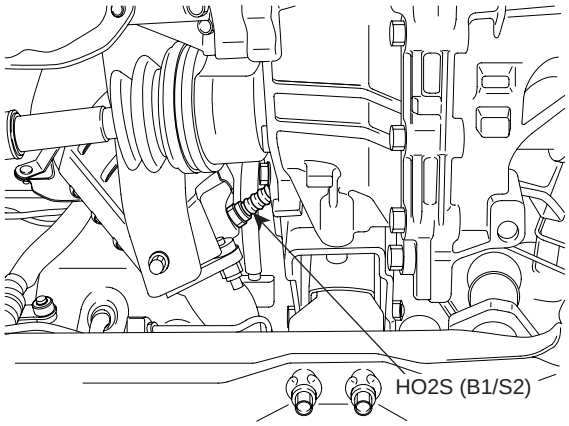

EFRF010B

[22] Multi-Purpose Check Connector

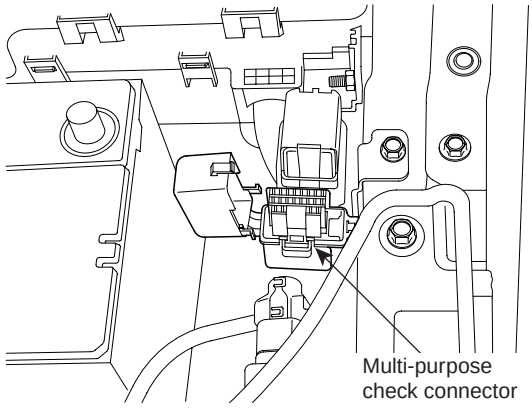

EFRF007A

[23] Vehicle Speed Sensor (VSS)	
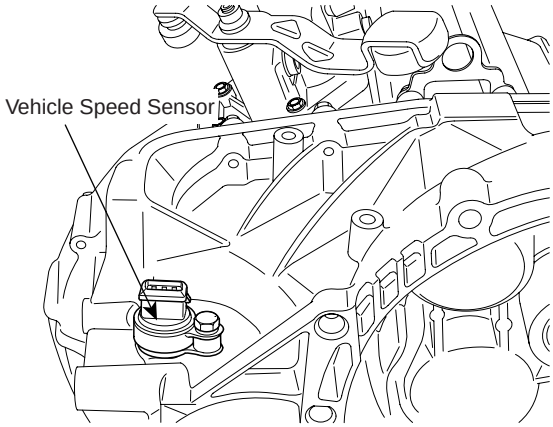 EFRF007I	

ENGINE CONTROL MODULE (ECM)

ENGINE CONTROL MODULE E3246F6D

1. ECM HARNESS CONNECTOR

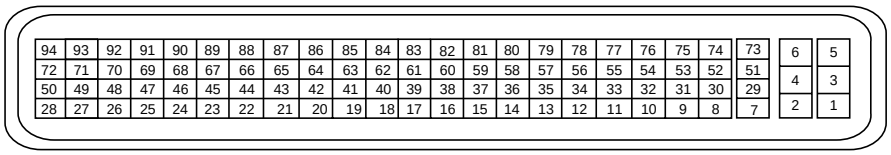

ECM Harness side Connector

ECM ASSEMBLY

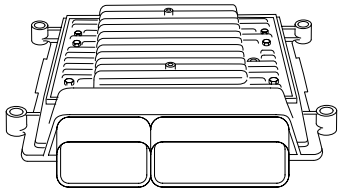

EFRF008P

2. ECM TERMINAL FUNCTION

Pin	Description	Connected to	Remark
1	Power ground	Chassis ground	
2	Battery voltage after ignition key supply	Ignition key	
3	Power ground	Chassis ground	
4	Battery voltage after ignition key supply	Main relay	
5	ECM ground	Chassis ground	
6	Direct battery voltage supply	Battery(+)	
7	Ignition coil for CYL. 1(without immobilizer) or Ignition coil for CYL. 4(with immobilizer)	Ignition coil (CYL. 1 or 4)	
8	Ignition shield ground	Ignition coil (CYL. 1, 2, 3, 4)	
9	MAFS & IATS ground	MAFS & IATS	
10	MAFS & IATS ground	MAFS & IATS	
11	Mass air flow sensor signal input	MAFS	
12	Accelerator position sensor2(APS2) ground	APS	
13	Accelerator position sensor2(APS2) signal input	APS	
14	Engine coolant temperature (ECTS) ground	ECTS	
15	ECTS signal input	ECTS	
16	HO2S (Bank1/Sensor1) ground	HO2S (Bank1/Sensor1)	
17	HO2S (Bank1/Sensor1) signal input	HO2S (Bank1/Sensor1)	
18	Intake air temperature sensor (IATS) signal input	Intake air temperature sensor (IATS)	
19	Accelerator position sensor1(APS1) ground	APS	
20	Accelerator position sensor1(APS1) signal input	APS	
21	Knock sensor ground	Knock sensor	

Pin	Description	Connected to	Remark
22	Knock sensor signal input	Knock sensor	
23	TPS supply (+5V)	Electronic Throttle System module	
24	Accelerator position sensor1(APS1) supply(+5V)	APS	
25	Injector for CYL. 1	Injector (CYL.1)	
26	Injector for CYL. 3	Injector (CYL.3)	
27	Injector for CYL. 4	Injector (CYL.4)	
28	Injector for CYL. 2	Injector (CYL.2)	
29	Ignition coil for CYL. 3(without immobilizer) or Ignition coil for CYL. 2(with immobilizer)	Ignition coil (CYL. 3 or 2)	
30	Power steering sensor ground	Ignition coil (CYL. 3 or 2)	
31	-	-	
32	-	-	
33	-	-	
34	-	-	
35	A/C pressure transducer signal input	A/C pressure transducer	
36	Fuel level gauge signal input	Fuel level gauge	
37	CVVT oil temperature sensor (OTS) ground	CVVT oil temperature sensor (OTS)	
38	HO2S (Bank1/Sensor2) signal input	HO2S (Bank1/Sensor2)	
39	HO2S (Bank1/Sensor2) ground	HO2S (Bank1/Sensor2)	
40	CVVT oil temperature sensor (OTS) signal input	CVVT oil temperature sensor (OTS)	
41	Throttle position sensor1 signal input	Electronic Throttle System module	
42	Throttle position sensor ground	Electronic Throttle System module	
43	-	-	
44	-	-	
45	-	-	
46	-	-	
47	Accelerator position sensor1(APS2) supply(+5V)	APS	
48	Sensor supply (+5V)	Power steer'g sensor, A/C pressure transducer	
49	A/C pressure switch signal input	A/C pressure switch	
50	-	-	
51	Ignition coil for CYL. 4(without immobilizer) or Ignition coil for CYL. 1(with immobilizer)	Ignition coil (CYL. 4 or 1)	
52	Power steering sensor signal input	Power steering sensor	
53	Wheel speed signal from ABS unit or Vehicle speed sensor signal	ABS unit or Vehicle speed sensor	
54	Power steering pressure switch signal input	Power steering pressure switch	
55	Wheel speed sensor (+) inductive signal	Wheel speed sensor	without ABS

Pin	Description	Connected to	Remark
56	Wheel speed sensor (-) inductive signal	Wheel speed sensor	without ABS
57	A/C pressure transducer ground	A/C pressure transducer	
58	Cruise control switch signal	Steering wheel	
59	Cruise control switch ground	Steering wheel	
60	A/C request switch signal input	A/C request switch	
61	Alternator FR signal input	Alternator	
62	A/C compressor switch signal input	A/C compressor	
63	Fuel consumption signal	Cluster	
64	Main relay control	Main relay	
65	PWM fan control	Fan control unit	
66	CVVT oil control valve(OCV) control	CVVT oil control valve (OCV)	
67	PCSV control	PCSV	
68	-	-	
69	Immobilizer lamp output	Immobilizer lamp	
70	Electric fuel pump relay control	Electric fuel pump relay	
71	ETS Motor output 1	ETS Motor	
72	ETS Motor output 2	ETS Motor	
73	Ignition coil for CYL. 2(without immobilizer) or Ignition coil for CYL. 3(with immobilizer)	Ignition coil (CYL. 2 or 3)	
74	Brake test switch signal input	Brake test switch	
75	Immobilizer data line	Immobilizer	
76	Diagnostic data line (K-line)	Data Link Connector(DLC)	
77	CAN [High]	ABS Control module	
78	CAN [Low]	ABS Control module	
79	Camshaft position sensor (CMPS) ground	CMPS	
80	Camshaft position sensor (CMPS) signal input	CMPS	
81	Crankshaft position sensor (CKPS) ground	CKPS	
82	Crankshaft position sensor (CKPS) signal input	CKPS	
83	Brake light switch signal input	Brake light switch	
84	Clutch switch signal input	Clutch switch	
85	Throttle position PWM output	EPS control module	
86	Engine speed signal output	Tachometer	
87	A/C compressor relay control output	A/C compressor relay	
88	Cooling fan relay-High control output	Cooling fan relay	
89	Cruise lamp control	Cluster	
90	Cruise set lamp control	Cluster	
91	-	-	
92	Malfunction indicator lamp(MIL) output	Malfunction indicator lamp(MIL)	

Pin	Description	Connected to	Remark
93	HO2S heater (Bank1/Sensor1)	HO2S heater (Bank1/Sensor1)	
94	HO2S heater (Bank1/Sensor2)	HO2S heater (Bank1/Sensor2)	

3. ECM TERMINAL INPUT/OUTPUT SIGNAL

Pin	Description	Vehicle State	Input, Output value		Remark
			Type	Range	
1	Power ground	Idle	DC	Max. 50 mV	
2	Battery voltage after ignition key supply	IG OFF	DC	Max. 0.5V	
		IG ON	DC	V bat	
3	Power ground	Idle	DC	Max. 50 mV	
4	Battery voltage after ignition key supply	IG OFF	DC	Max. 1.0V	
		IG ON	DC	V bat	
5	ECM ground	Idle	DC	Max. 50 mV	
6	Direct battery voltage supply	IG off	Current	1.0mV	
		Always	DC	V bat	
7	Ignition coil for CYL. 1(without immobilizer) or Ignition coil for CYL. 4(with immobilizer)	Idle	Pulse	1st voltage: 300~400V	
				ON voltage: Max. 2V	
8	Ignition shield ground	Idle	DC	Max. 50 mV	
9	MAFS & IATS ground	Idle	DC	Max. 50 mV	
10	Mass air flow sensor signal input	Idle	Analog	0 ~ 2.0V	
		3000 rpm		1.0 ~ 4.5V	
11	Throttle position sensor2 signal input	C.T	Analog	Min. 4V	
		W.O.T		0.25 ~ 0.9V	
12	Accelerator position sensor2(APS2) ground	Idle	DC	Max. 50 mV	
13	Accelerator position sensor2(APS2) signal input	C.T	Analog	0.3 ~ 0.9V	
		W.O.T		1.5 ~ 3.0V	
14	Engine coolant temperature (ECTS) ground	Idle	DC	Max. 50 mV	
15	ECTS signal input	Engine run	DC	0.5V ~4.5V	
16	HO2S (Bank1/Sensor1) ground	Idle	DC	Max. 50 mV	
17	HO2S (Bank1/Sensor1) signal input	Engine run	Analog	Rich: 0.6 1.0V	
				Lean: 0 ~ 0.4V	
18	Intake air temperature sensor (IATS) signal input	Engine run	Analog	0 ~ 5.0V	
19	Accelerator position sensor1(APS1) ground	Idle	DC	Max. 50 mV	
20	Accelerator position sensor1(APS1) signal input	C.T	Analog	0.3 ~ 0.9V	
		W.O.T		4.0 ~ 4.8V	

Pin	Description	Vehicle State	Input, Output value		Remark
			Type	Range	
21	Knock sensor ground	Idle	DC	Max. 50 mV	
22	Knock sensor signal input	Normal	Voltage	2.0 ~ 3.0V	
		Knocking	Frequency	Frequency change	
23	TPS supply (+5V)	IG OFF	DC	Max. 0.5V	
		IG ON	DC	4.9 ~ 5.1V	
24	Accelerator position sensor1(APS1) supply(+5V)	IG OFF	DC	Max. 0.5V	
		IG ON	DC	4.9 ~ 5.1V	
25	Injector for CYL. 1	Idle	Pulse	High: V bat	
				Low: Max. 1.0V	
				Peak voltage:Max.80V	
26	Injector for CYL. 3	Idle	Pulse	High: V bat	
				Low: Max. 1.0V	
				Peak voltage:Max.80V	
27	Injector for CYL. 4	Idle	Pulse	High: V bat	
				Low: Max. 1.0V	
				Peak voltage:Max.80V	
28	Injector for CYL. 2	Idle	Pulse	High: V bat	
				Low: Max. 1.0V	
				Peak voltage:Max.80V	
29	Ignition coil for CYL. 3(without immobilizer) or Ignition coil for CYL. 2(with immobilizer)	Idle	Pulse	1st voltage: 300~400V	
				ON voltage: Max. 2V	
30	Power steering sensor ground	Idle	DC	Max. 50 mV	
31	-				
32	-				
33	-				
34	-				
35	A/C pressure transducer signal input	Idle	DC	0.4 ~ 4.6V	
36	Fuel level gauge signal input				
37	CVVT oil temperature sensor (OTS) ground	Idle	DC	Max. 50 mV	
38	HO2S (Bank1/Sensor2) signal input	Engine run	Analog	Rich: 0.6 1.0V	
				Lean: 0 ~ 0.4V	
39	HO2S (Bank1/Sensor2) ground	Idle	DC	Max. 50 mV	

Pin	Description	Vehicle State	Input, Output value		Remark
			Type	Range	
40	CVVT oil temperature sensor (OTS) signal input	Idle	Analog	0.5 ~ 4.5V	
41	Throttle position sensor1 signal input	C.T	Analog	Min. 4V	
		W.O.T		0.25 ~ 0.9V	
42	Throttle position sensor ground	Idle	DC	Max. 50 mV	
43	-				
44	-				
45	-				
46	-				
47	Accelerator position sensor1(APS2) supply(+5V)	IG OFF	DC	Max. 0.5V	
		IG ON	DC	4.9 ~ 5.1V	
48	Sensor supply (+5V)	IG OFF	DC	Max. 0.5V	
		IG ON	DC	4.9 ~ 5.1V	
49	A/C pressure switch signal input	Idle	DC	Low: Max.1.0V	
			DC	High:V bat	
50	-				
51	Ignition coil for CYL. 4(without immobilizer) or Ignition coil for CYL. 1(with immobilizer)	Idle	Pulse	1st voltage: 300~400V	
				ON voltage: Max. 2V	
52	Power steering sensor signal input	Idle	DC	0.4 ~ 4.6V	
53	Wheel speed signal input from ABS unit or Vehicle speed sensor signal				
54	Power steering pressure switch signal input	Idle	DC	Low: Max.1.0V	
				High:V bat	
55	Wheel speed sensor (+) inductive signal	Vehicle run	Sine wave	Min. 0.2V	
56	Wheel speed sensor (-) inductive signal	Vehicle run	Sine wave	Min. 0.2V	
57	A/C pressure transducer ground	Idle	DC	Max. 50 mV	
58	Cruise control switch	Cruise SW ON	DC	Min. 4.9V	
		Resume / Accel		2.0 ~ 2.2V	
		Set / Coast		0.7 ~ 0.8V	
		Cancel		Max. 50mV	
59	Cruise control switch ground	Idle	DC	Max. 50mV	
60	A/C request switch signal input	A/C OFF	DC	Max. 1.0V	
		A/C ON		V bat	
61	Alternator FR signal input	Idle	Pulse	Low: Max.1.5V	
				High:V bat	

Pin	Description	Vehicle State	Input, Output value		Remark
			Type	Range	
62	A/C compressor switch signal input	A/C OFF	DC	Max. 1.0V	
		A/C ON		V bat	
63	Fuel consumption signal	Idle	Pulse	HIgh: V bat	
				Low: Max. 0.5V	
64	Main relay control	Relay OFF	DC	Max. 1.0V	
		Relay ON		V bat	
65	PWM fan control	A/C ON	Pulse	HIgh: V bat	
				Low: Max. 0.5V	
66	CVVT oil control valve(OCV) control	Idle	Pulse	HIgh: V bat	
				Low: Max. 1.0V	
67	-				
68	-				
69	Immobilizer lamp output	Lamp off	DC	V bat	
		Lamp on	DC	Max. 1.0V	
70	Electric fuel pump relay control	Relay OFF	DC	Max. 1.0V	
		Relay ON	DC	V bat	
71	ETS Motor output 1	Idle	PULSE	High: V bat	
				Low: Max. 1.0V	
72	ETS Motor output 2	Idle	Pulse	High: V bat	
				Low: Max. 1.0V	
73	Ignition coil for CYL. 2(without immobilizer) or Ignition coil for CYL. 3(with immobilizer)	Idle	Pulse	1st voltage: 300~400V	
				ON voltage: Max. 2V	
74	Brake test switch signal input	OFF	DC	HIgh: V bat	
		ON		Low: Max. 0.5V	

Pin	Description	Vehicle State	Input, Output value		Remark
			Type	Range	
75	Immobilizer data line	After IG ON	Pulse	High: Min. 8.5V	
				Low: Max. 3.5V	
76	Diagnostic data line (K-line)	Receiving	Pulse	High: above V bat×70%	
				Low: below V bat×30%	
		Sending	Pulse	High: above V bat×80%	
				Low: below V bat×20%	
77	CAN [High]	RECESSIVE	Pulse	2.0 ~ 3.0 V	
		DOMINANT		2.75 ~ 4.5 V	
78	CAN [Low]	RECESSIVE	Pulse	2.0 ~ 3.0 V	
		DOMINANT		0.5 ~ 2.25 V	
79	Camshaft position sensor (CMPS) ground	Idle	DC	Max. 50mV	
80	Camshaft position sensor (CMPS) signal input	Engine run	Pulse	High: Vcc	
				Low: Max. 0.5V	
81	Crankshaft position sensor (CKPS) ground	Idle	DC	Max. 50 mV	
82	Crankshaft position sensor (CKPS) signal input	Engine run	Pulse	High: Vcc	
				Low: Max. 0.5V	
83	Brake light switch signal input	OFF	DC	High: V bat	
		ON		Low: Max. 0.5V	
84	Clutch switch signal input				
85	Throttle position PWM output	Idle	Pulse	High: V bat	
				Low: Max. 0.5V	
86	Engine speed signal output	Idle	Pulse	High: V bat	
				Low: Max. 0.5V	
				Idle = 20 ~ 26Hz	
87	A/C compressor relay control output	A/C OFF	DC	V bat	
		A/C ON	DC	Max. 1.0V	
88	Cooling fan relay-High control output	Relay OFF	DC	V bat	
		Relay ON	DC	Max. 1.0V	
89	Cruise lamp control output	Lamp OFF	DC	V bat	
		Lamp ON		Max. 1.0V	
90	Cruise set lamp control output	Lamp OFF	DC	V bat	
		Lamp ON		Max. 1.0V	
91	-				

Pin	Description	Vehicle State	Input, Output value		Remark
			Type	Range	
92	Malfunction indicator lamp(MIL) output	MIL OFF	DC	V bat	
		MIL ON		Max. 1.0V	
93	HO2S heater (Bank1/Sensor1)	Engine run	Pulse	High: V bat	
				Low: 0 ~ 0.5 V	
94	HO2S heater (Bank1/Sensor2)	Engine run	Pulse	High: V bat	
				Low: Max. 1.0 V	

CIRCUIT DIAGRAM EEFC80C5

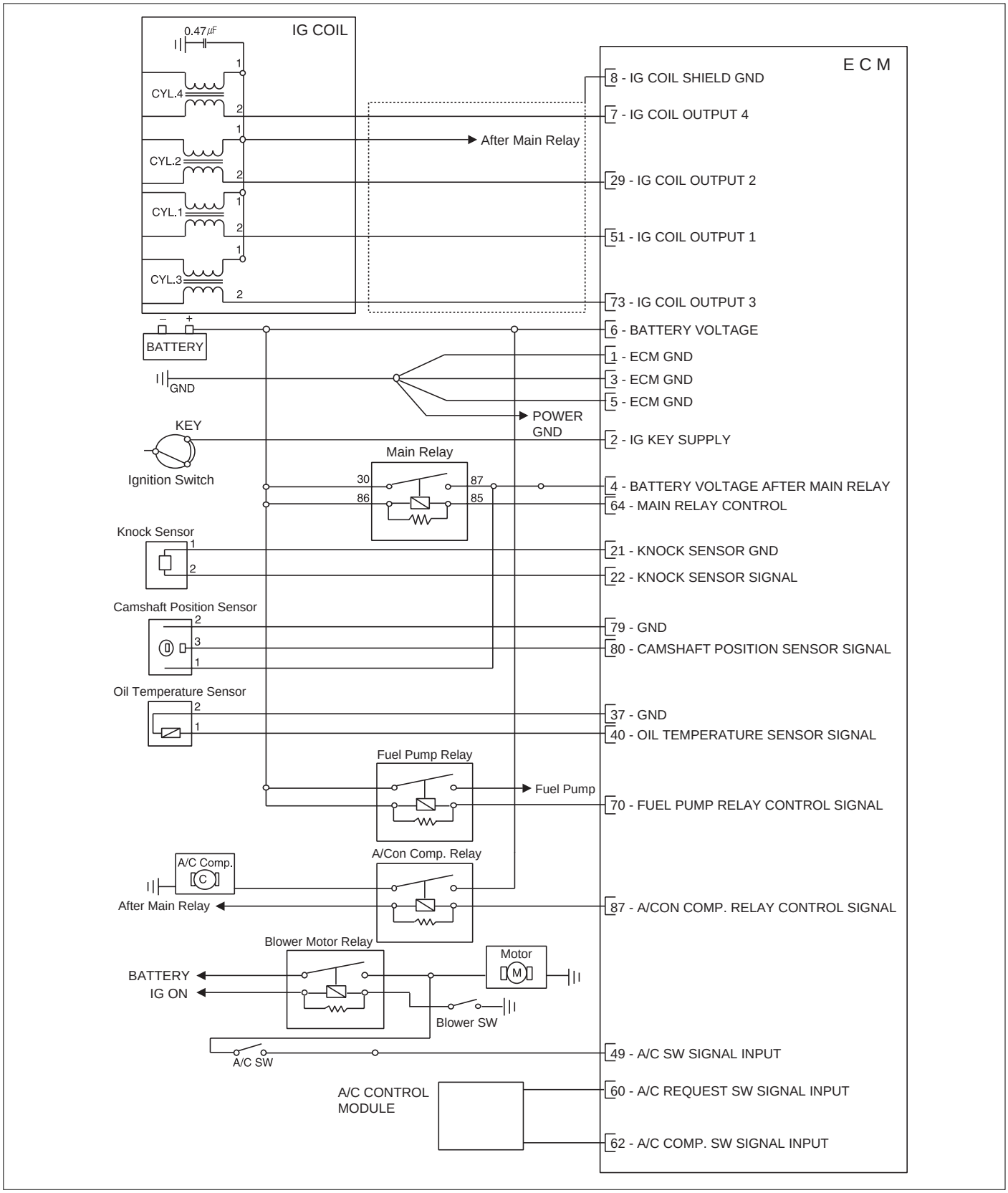

EFRF053A

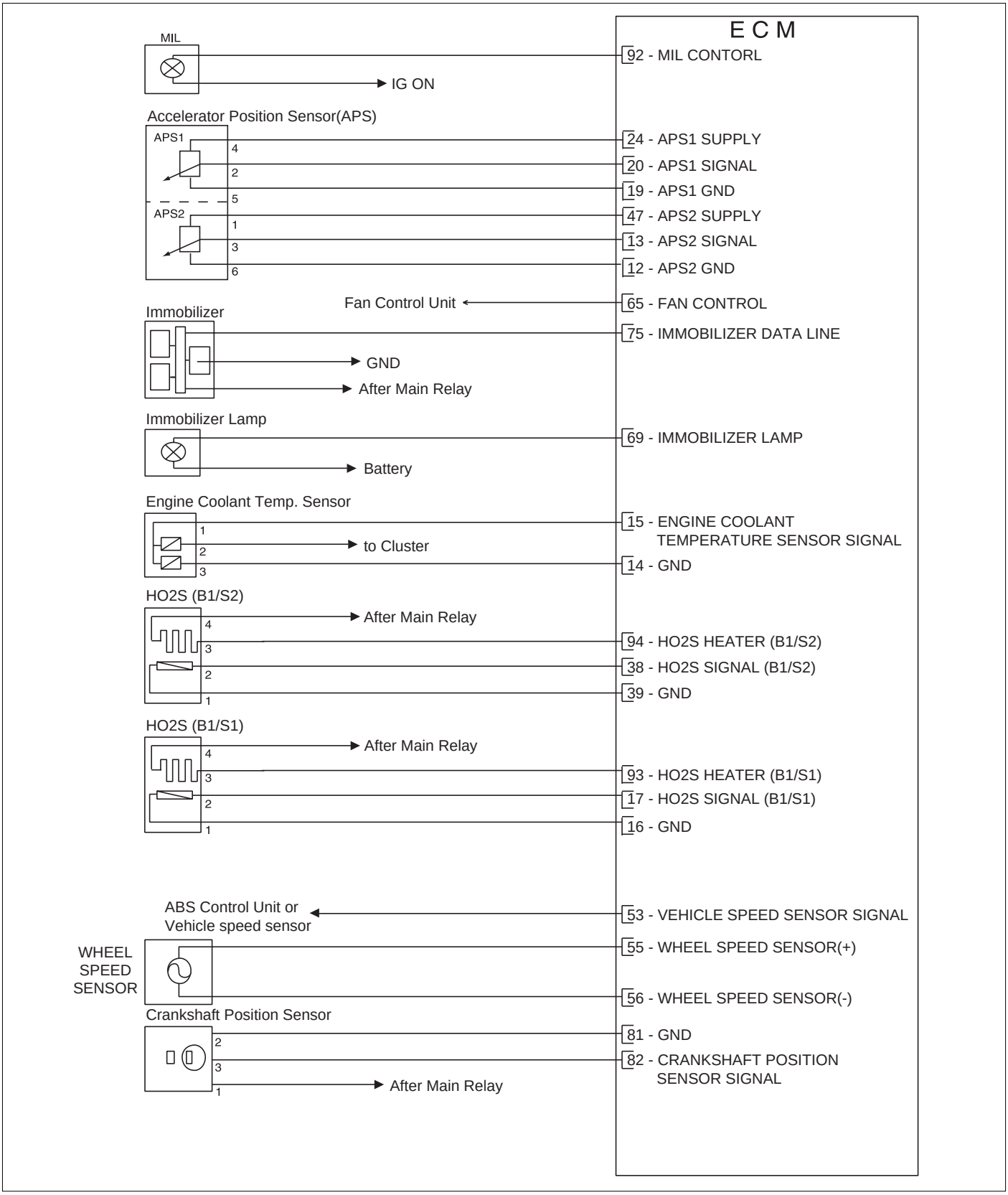
E C M
MIL
IG ON
92 - MIL CONTORL
Accelerator Position Sensor(APS)
APS1
APS2
24 - APS1 SUPPLY
20 - APS1 SIGNAL
19 - APS1 GND
47 - APS2 SUPPLY
13 - APS2 SIGNAL
12 - APS2 GND
Fan Control Unit
65 - FAN CONTROL
Immobilizer
75 - IMMOBILIZER DATA LINE
GND
After Main Relay
Immobilizer Lamp
69 - IMMOBILIZER LAMP
Battery
Engine Coolant Temp. Sensor
15 - ENGINE COOLANT TEMPERATURE SENSOR SIGNAL
to Cluster
14 - GND
HO2S (B1/S2)
After Main Relay
94 - HO2S HEATER (B1/S2)
38 - HO2S SIGNAL (B1/S2)
39 - GND
HO2S (B1/S1)
After Main Relay
93 - HO2S HEATER (B1/S1)
17 - HO2S SIGNAL (B1/S1)
16 - GND
ABS Control Unit or Vehicle speed sensor
53 - VEHICLE SPEED SENSOR SIGNAL
WHEEL SPEED SENSOR
55 - WHEEL SPEED SENSOR(+)
56 - WHEEL SPEED SENSOR(-)
Crankshaft Position Sensor
81 - GND
82 - CRANKSHAFT POSITION SENSOR SIGNAL
After Main Relay

EFRF054A

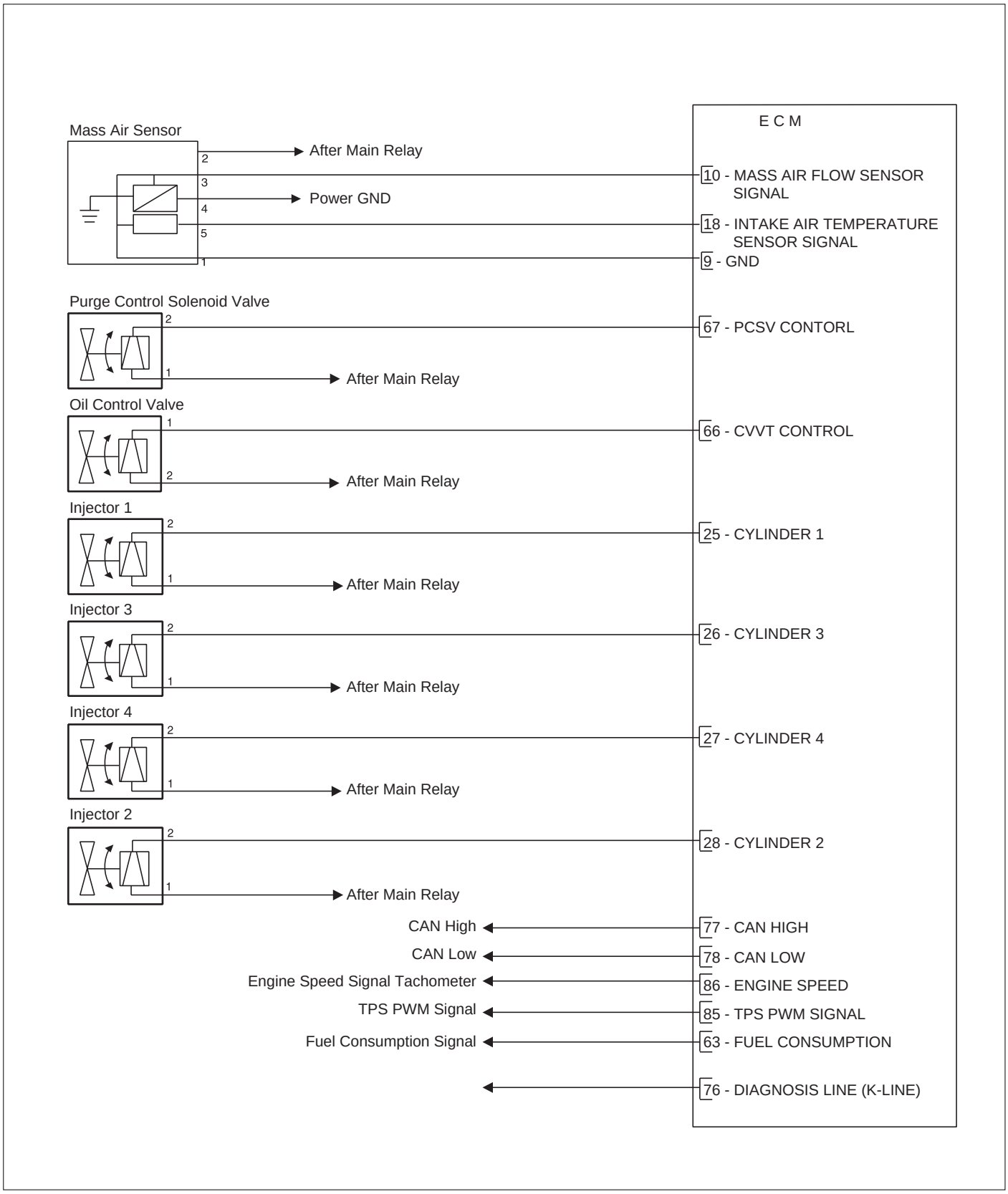
E C M
Mass Air Sensor
2
3
4
5
1
After Main Relay
Power GND
10 - MASS AIR FLOW SENSOR SIGNAL
18 - INTAKE AIR TEMPERATURE SENSOR SIGNAL
9 - GND
Purge Control Solenoid Valve
2
1
67 - PCSV CONTORL
After Main Relay
Oil Control Valve
1
2
66 - CVVT CONTROL
After Main Relay
Injector 1
2
1
25 - CYLINDER 1
After Main Relay
Injector 3
2
1
26 - CYLINDER 3
After Main Relay
Injector 4
2
1
27 - CYLINDER 4
After Main Relay
Injector 2
2
1
28 - CYLINDER 2
After Main Relay
CAN High
77 - CAN HIGH
CAN Low
78 - CAN LOW
Engine Speed Signal Tachometer
86 - ENGINE SPEED
TPS PWM Signal
85 - TPS PWM SIGNAL
Fuel Consumption Signal
63 - FUEL CONSUMPTION
76 - DIAGNOSIS LINE (K-LINE)

EFRF055A

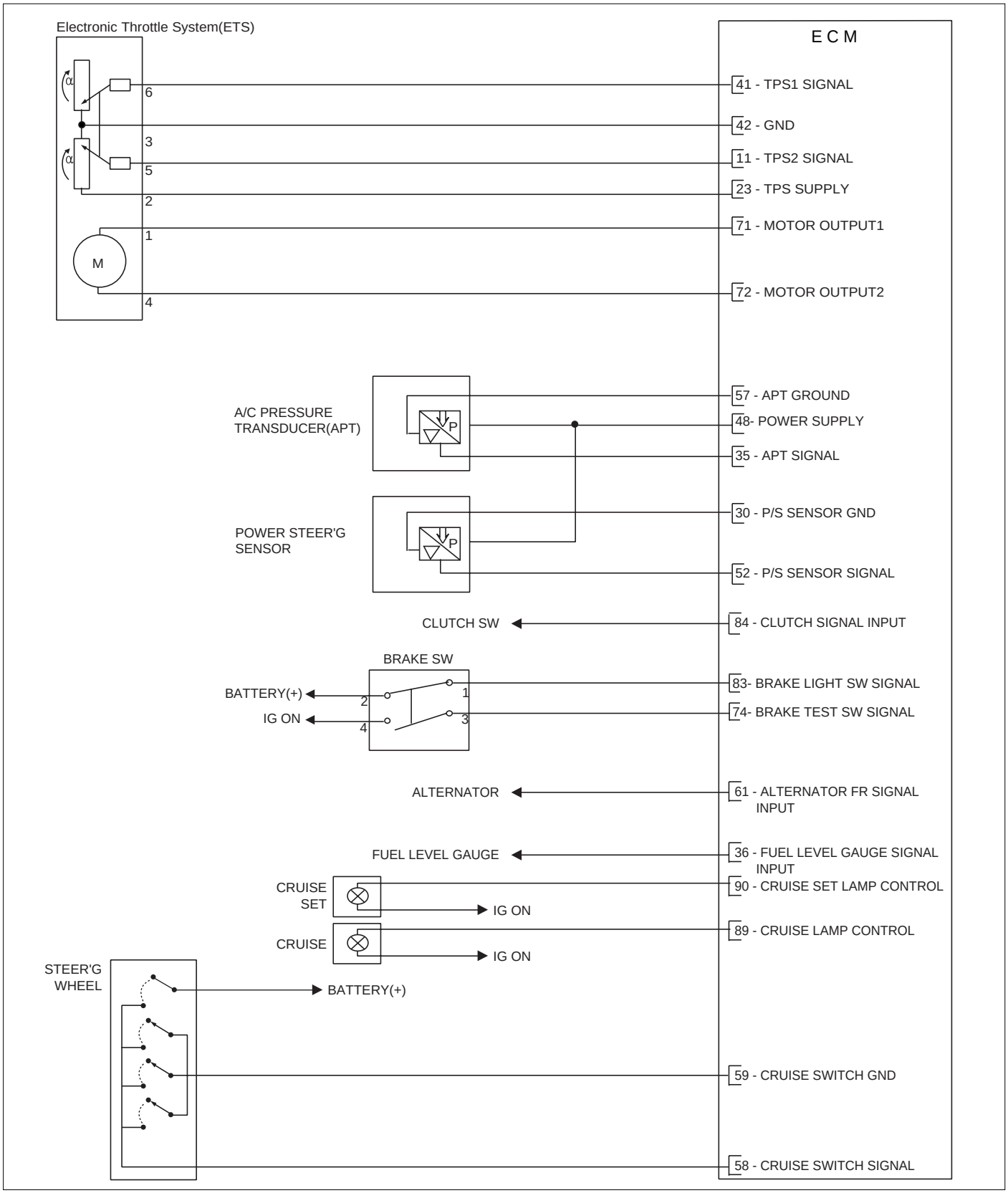
Electronic Throttle System(ETS)
E C M
6
3
5
2
1
4
M
41 - TPS1 SIGNAL
42 - GND
11 - TPS2 SIGNAL
23 - TPS SUPPLY
71 - MOTOR OUTPUT1
72 - MOTOR OUTPUT2
A/C PRESSURE TRANSDUCER(APT)
P
57 - APT GROUND
48- POWER SUPPLY
35 - APT SIGNAL
POWER STEER'G SENSOR
P
30 - P/S SENSOR GND
52 - P/S SENSOR SIGNAL
CLUTCH SW
84 - CLUTCH SIGNAL INPUT
BRAKE SW
BATTERY(+)
IG ON
2
4
1
3
83- BRAKE LIGHT SW SIGNAL
74- BRAKE TEST SW SIGNAL
ALTERNATOR
61 - ALTERNATOR FR SIGNAL INPUT
FUEL LEVEL GAUGE
36 - FUEL LEVEL GAUGE SIGNAL INPUT
CRUISE SET
IG ON
90 - CRUISE SET LAMP CONTROL
CRUISE
IG ON
89 - CRUISE LAMP CONTROL
STEER'G WHEEL
BATTERY(+)
59 - CRUISE SWITCH GND
58 - CRUISE SWITCH SIGNAL

EFRF056A

REPLACEMENT E20A166F

1. Disconnect the ECM wiruing connector.
2. Unscrew four bolts mounting on black of air cleaner assembly.

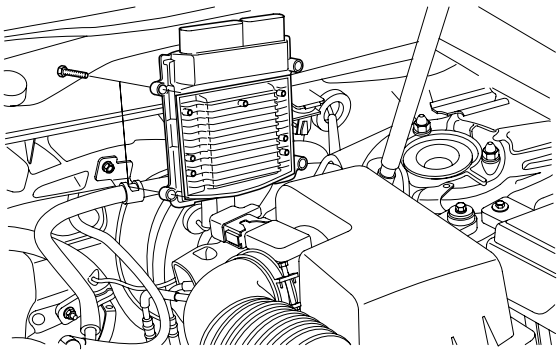

KFRE048A

3. Remove the ECM.
4. Install a new ECM.

Tightening torque: 0.4 ~ 0.6kgf·m

5. Perform the below procedeures to program an new TPS adaptation into a new ECM.

CAUTION

When replacing ECM or ETC throttle body, be sure to perform a new TPS adaptation using Hi-Scan(Pro).

1. Clear the previous TPS adaptation value using Hi-Scan(Pro).

1. HTUNDAI VEHICLE DIAGNOSIS ▼
MODEL : SONATA 05-
SYSTEM : ENGINE
GASOLINE
01. DIAGNOSTIC TROUBLE CODES
02. CURRENT DATA
03. FLIGHT RECORD
04. ACTUATION TEST
05. SIMU-SCAN
06. FREEZE FRAME DATA
07. RESETTING ADAPTIVE VALUES
08. IDENTIFICATION CHECK

EFRF100A

1.7. RESETTING ADAPTIVE VALUES	
RESET ALL ADAPTIVE VALUES	
CONDITION	IG. KEY ON ENGINE STOP
PRESS [REST], IF TOU ARE READY !	
REST	

EFRF101A

2. Turn the iginition switch off, and then turn it on without cranking.
3. Wait for 10sec. until TPS adaptation finishes.

NOTE

This procedures has to be performed under below conditions.

- *Battery voltage 〉 10V*
- *Intake air temperature 〉 5.3℃*
- *5.3℃ 〈 Coolant temperature 〈 99.8℃*

6. Check a fault code(DTC) on Hi-Scan(Pro) if the TPS adaptation was successful.

ECM PROBLEM INSPECTION PROCEDURE EF1CA6BA

1. TEST ECM GROUND CIRCUIT: Measure resistance between ECM(pin NO. 1, 2, 3) and chassis ground using the backside of ECM harness connector as ECM side check point. If the problem is found, repair it.

Specification (Resistance) Between terminal 1 of C230-1 connector and chassis ground : 1Ω or less Between terminal 2 of C230-1 connector and chassis ground : 1Ω or less

2. TEST ECM CONNECTOR: Disconnect the ECM connector and visually check the ground terminals on ECM side and harness side for bent pins or poor contact pressure. If the problem is found, repair it.
3. If problem is not found in Step 1 and 2, the ECM could be faulty. If so, replace the ECM with a new one, and then check the vehicle again. If the vehicle operates normally then the problem was likely with the ECM.

4. RE-TEST THE ORIGINAL ECM : Install the original ECM (may be broken) into a known-good vehicle and check the vehicle. If the problem occurs again, replace the original ECM with a new one. If problem does not occur, this is intermittent problem (Refer to INTERMITTENT PROBLEM PROCEDURE in BASIC INSPECTION PROCEDURE)

ENGINE COOLANT TEMPERATURE SENSOR (ECTS)

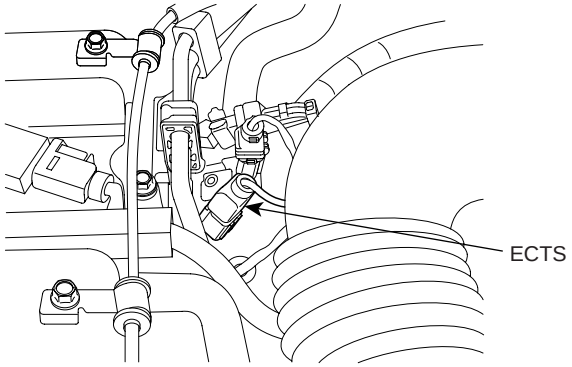

KFRE009B

DESCRIPTION E62BC8E7

The engine coolant temperature sensor (ECTS) is located in the engine coolant passage of the cylinder head for detecting the engine coolant temperature. The ECTS uses a thermistor whose resistance changes with the temperature variation. The electrical resistance of the ECTS decreases as the temperature increases, and increases as the temperature decreases. When the resistance value of the thermistor in the ECTS changes according to the engine coolant temperature, the output voltage also changes. During cold engine operation the ECM increases the fuel injection duration and controls the ignition timing using the information of engine coolant temperature to avoid engine stalling and improve driveability.

CIRCUIT DIAGRAM

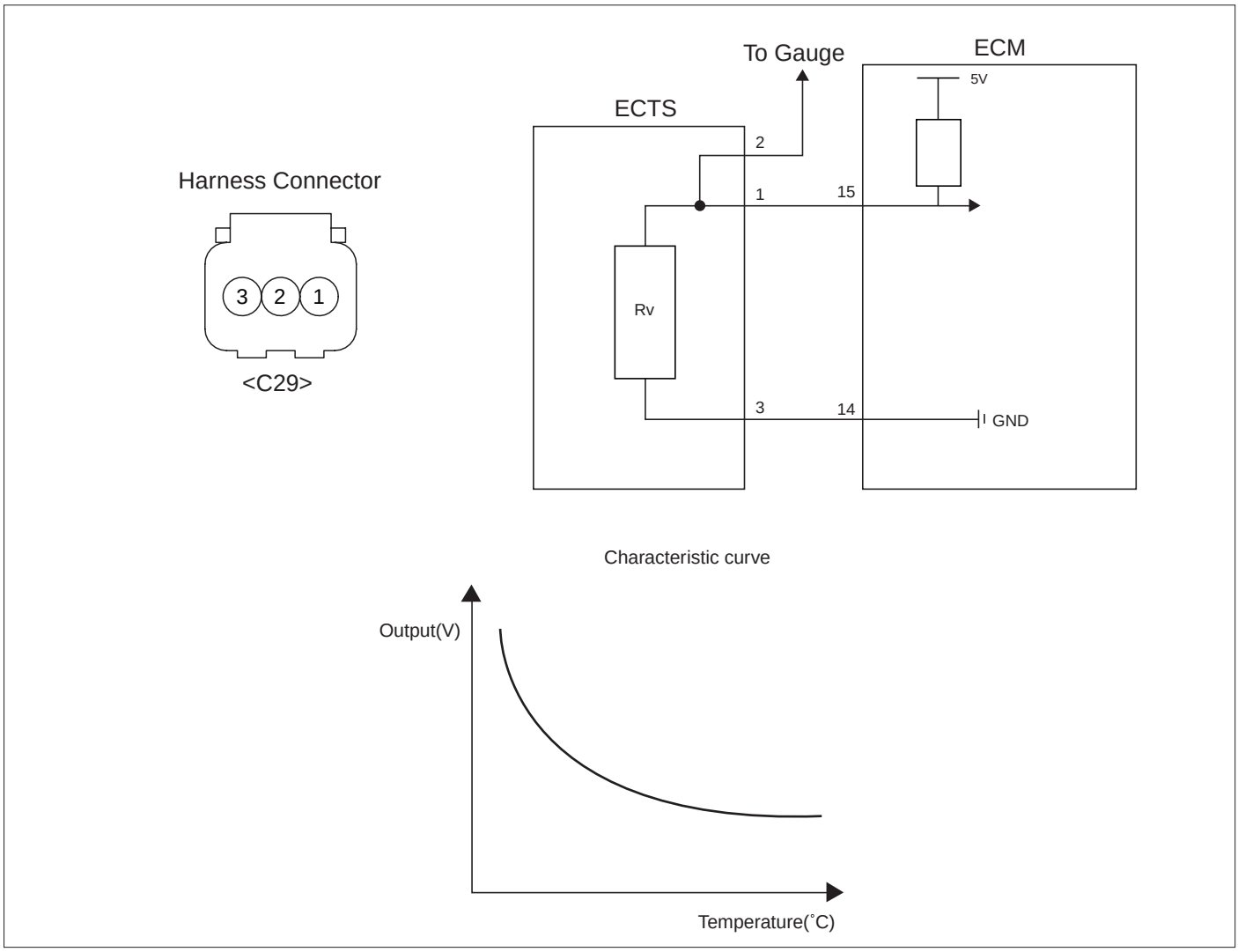

EFRF063A

SENSOR INSPECTION

1. Remove the Engine Coolant Temperature Sensor (ECTS) from the intake manifold.

2. With the temperature sensing portion of Engine Coolant Temperature Sensor (ECTS) immersed in hot engine coolant, check the resistance.

Temperature [℃(℉)]	Resistance (kΩ)
0(32)	5.79
20(68)	2.31 ~ 2.59
40(104)	1.15
80(176)	0.32

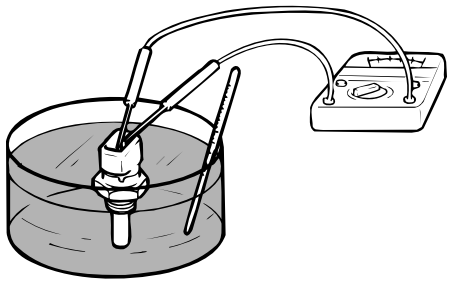

KFRE436

3. If the resistance deviates from the standard value greatly, replace the sensor.

HARNESS INSPECTION

Refer to DTC P0117, P0118.

INSTALLATION

1. Apply sealant LOCTITE 962T or the equivalent to the theaded portion.

2. Install the ECTS and tighten it to the specified torque.

Tightening torque : 3.0 ~ 4.0 kgf·m

3. Securely connect the harness connector.

MASS AIR FLOW SENSOR (MAFS)

MASS AIR FLOW SENSOR(MAFS) EEEA0AF5

The Mass Air Flow Sensor (MAFS) is located between the air cleaner assembly and the throttle body. The MAFS uses a hot film type sensing element to measure the mass of intake air entering the engine. Mass air flow rate is measured by detecting of heat transfer from a hot film probe. The change in air flow rate causes change in the amount of heat being transferred from the hot film probe surface to the air. A large amount of intake air represents acceleration or high load conditions while a small amount of intake air represents deceleration or idle. The ECM uses this information to determine the injection duration and ignition timing for the desired air/fuel ratio.

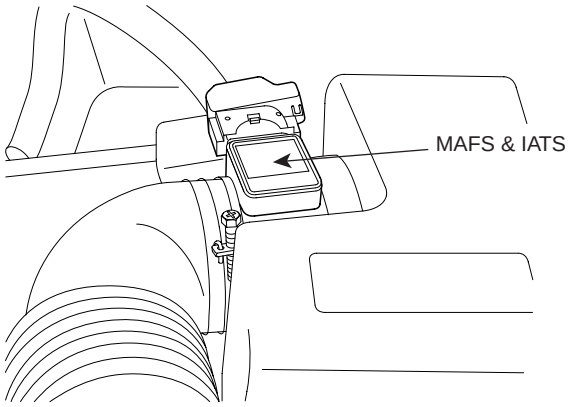

KFRE016E

CIRCUIT DIAGRAM

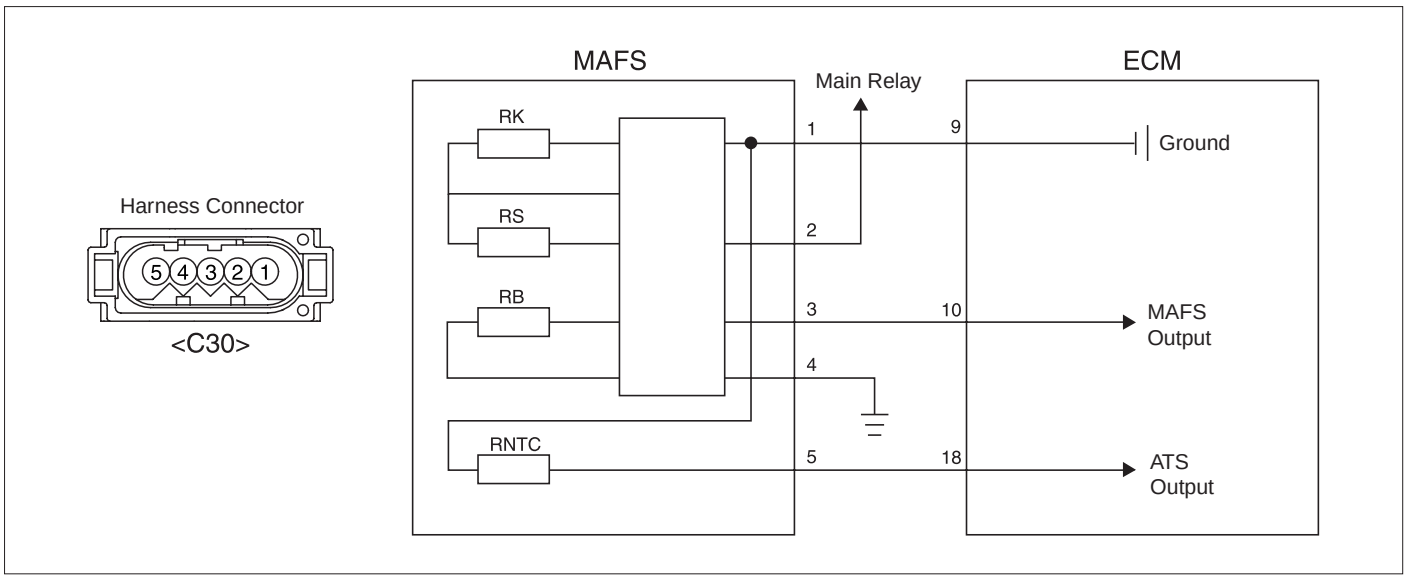

EFRF059A

WAVEFORM

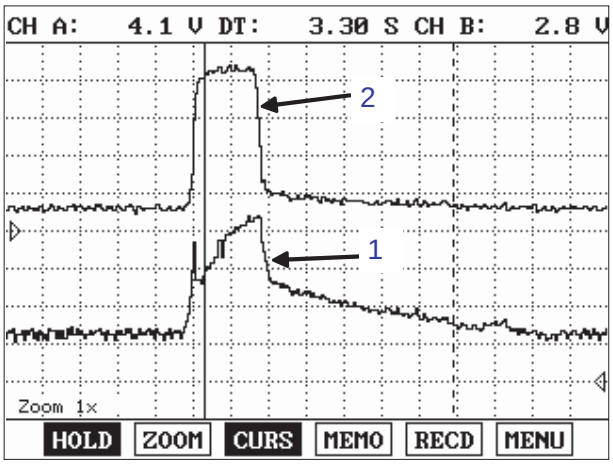

Fig.1

1. MAFS 2. TPS

The signals of MAFS and TPS are changed to increase on accelerating and decrease on decelerating simultaneously.

EFRF058A

HARNESS INSPECTION

DTC P0102, P0103.

SENSOR INSPECTION

1. Run the engine and connect Hi-Scan (Pro) to data link connector.

2. Check if sensor output is normal using Hi-Scan (Pro)

Condition	Output Voltage (V)	Intake Air Quantity (kg/h)
Idle	0.6 ~ 1.0	11.66 ~ 19.85
3000 rpm	1.7 ~ 2.0	43.84 ~ 58.79

INTAKE AIR TEMPERATURE (IAT) SENSOR

INTAKE AIR TEMPERATURE SENSOR (IATS) E5BCF2D6

The Intake Air Temperature Sensor (IATS) is installed into the Mass Air Flow Sensor (MAFS). The IATS uses a thermistor whose resistance changes with the temperature. The electrical resistance of the IATS decreases as the temperature increases, and increases as the temperature decreases. When the resistance value of the thermistor in IATS changes according to the intake air temperature, the signal voltage also changes. Using this signal, the information of the intake air temperature, the ECM corrects basic fuel injection duration and ignition timing.

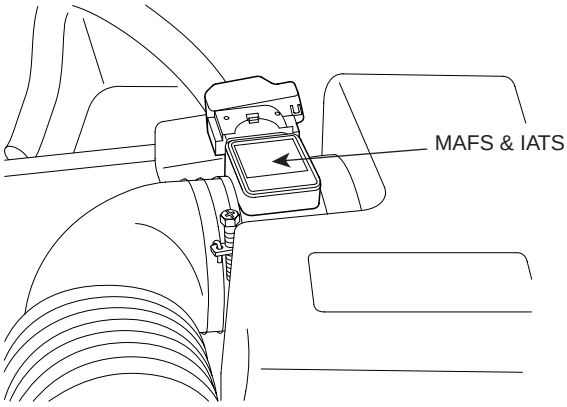

KFRE016E

CIRCUIT DIAGRAM

Refer to MAFS.

HARNESS INSPECTION

Refer to DTC P0111, P0112, P0113.

SENSOR INSPECTION

1. Disconnect IATS connector.
2. Measure resistance between the terminals 1 and 5 of IATS connector.

Temperature (℃)	Resistance (kΩ)
-40(-40)	41.26 ~ 47.49
-10(14)	8.72 ~ 9.69
0(32)	5.5 ~ 6.05
10(50)	3.55 ~ 3.88
20(68)	2.35 ~ 2.54
30(86)	1.61 ~ 1.73
80(176)	0.31 ~ 0.32
130(266)	0.087

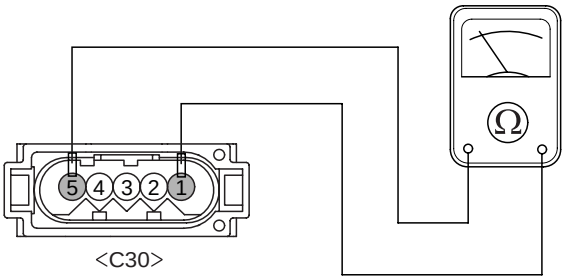

KFRE30

CAMSHAFT POSITION SENSOR (CMPS)

CAMSHAFT POSITION SENSOR (CMPS) E5FE3A66

The camshaft position sensor (CMPS) is a sensor that detects the top dead center of the NO. 1 cylinder. The CMPS consists of a hall type sensor and a target wheel on the end of the intake camshaft. When the target triggers the sensor, the output voltage is 5V. If not, the output voltage is 0V. This CMPS signal is sent to the ECM and the ECM uses it for synchronizing the firing of sequential fuel injectors.

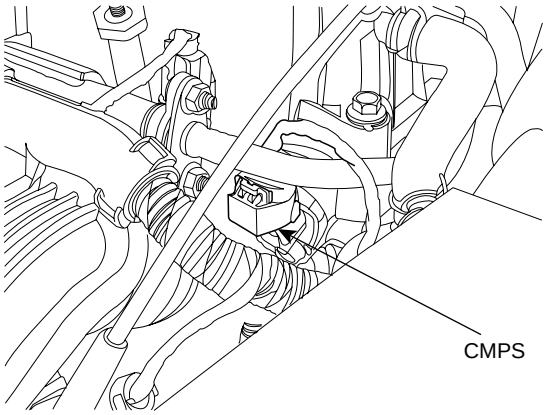

KFRE006B

CIRCUIT DIAGRAM

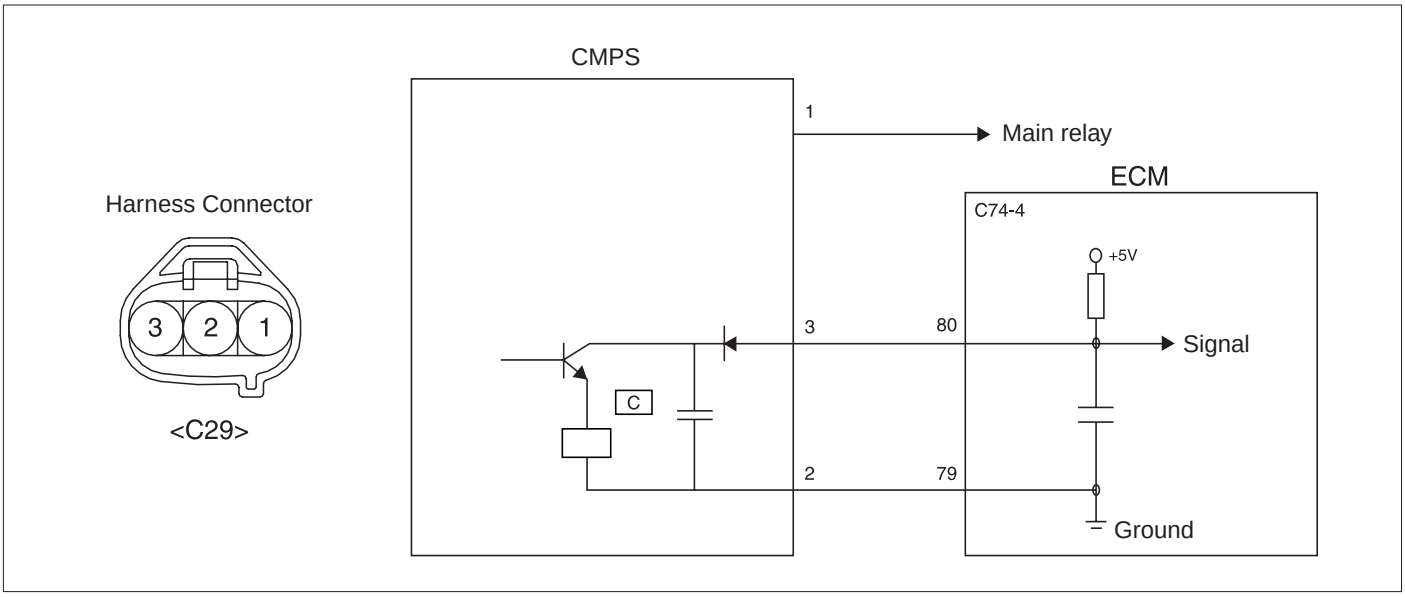

EFRF062A

SIGNAL WAVEFORM

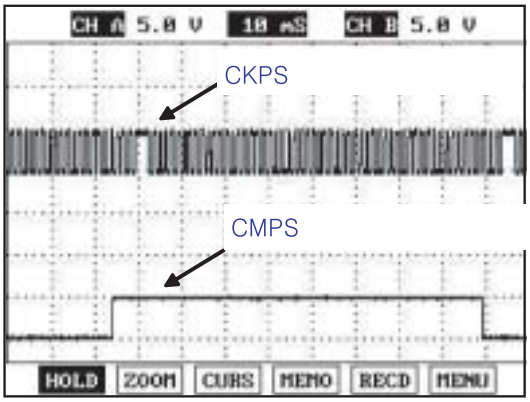

Fig.1

During a half cycle of CMPS signal sixty teeth including a missing tooth are appeared.

EFRF060A

INSPECTION

Refer to DTC P0340.

CRANKSHAFT POSITION SENSOR

CRANKSHAFT POSITION SENSOR (CKPS) EE9C9DFE

The Crankshaft Position Sensor (CKPS) is a hall sffect type sensor that generates voltage using a sensor and a target wheel mounted on the crankshaft there are 58 slots in the target wheel where one is longer than the others. When the slot in the wheel sligns with the sensor, the sensor voltage outputs low. When the metal(tooth) in the wheel aligns with the sensor, the sensor voltage outputs high. During one crankshaft rotation there are 58 rectangular signals and one longer signal. The PCM calculates engine RPM by using the sensor's signal and controls the injection duration and the ignition timing. Using the signal differences caused by the longer slot, the PCM identifies which cylinder is at top dead center.

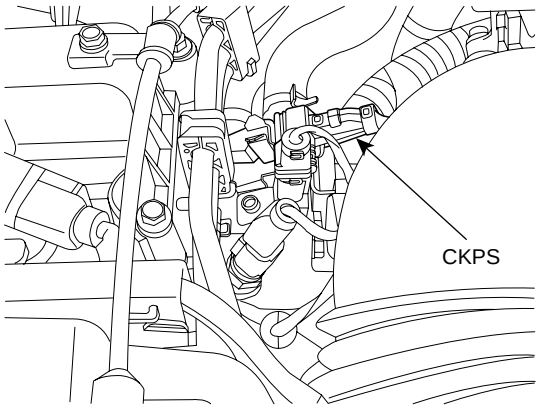

KFRE005B

CIRCUIT DIAGRAM

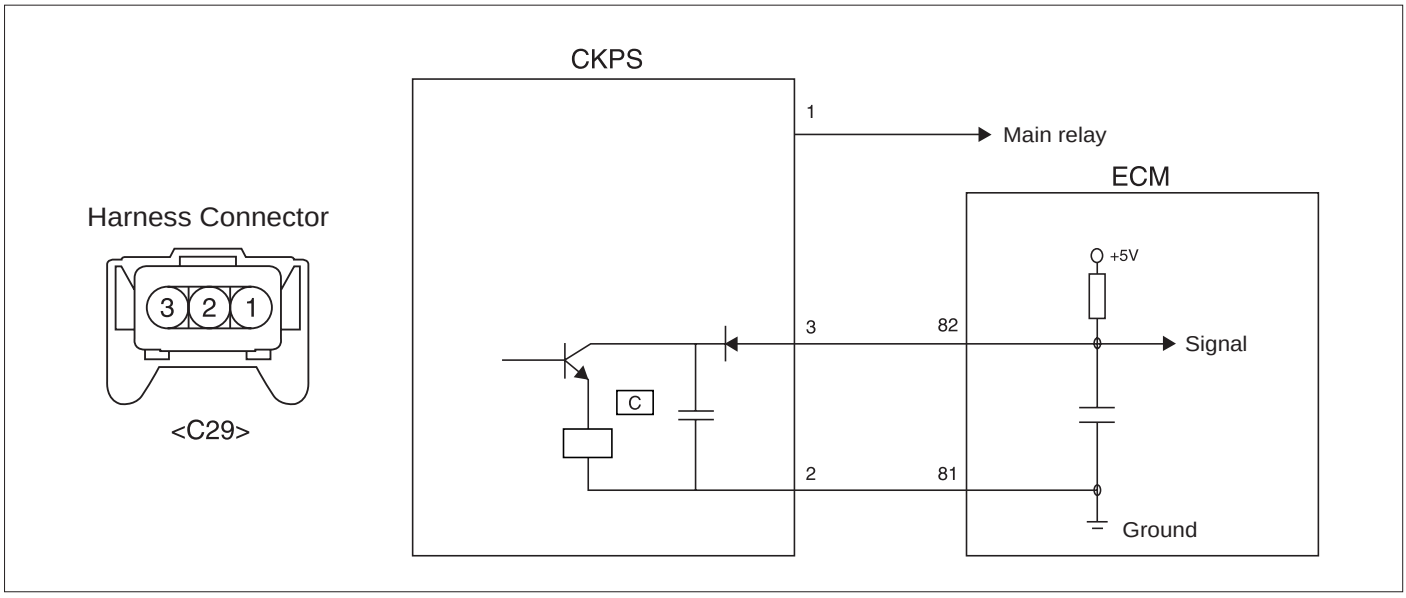

EFRF061A

SIGNAL WAVEFORM

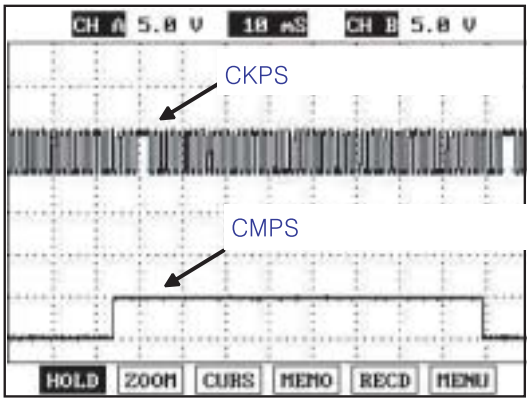

Fig.1

During a half cycle of CMPS signal sixty teeth including a missing tooth are appeared.

EFRF060A

INSPECTION

Refer to DTC P0335.

OXYGEN SENSOR (HO2S)

OXYGEN SENSOR E06E41F5

The HO2S is used to supply the PCM with information regarding the composition of the air/fuel mixture. To measure the oxygen content, the HO2S requires a supply of ambient air as a reference. The HO2S produces a voltage that varies between 0.1V and 0.9V under normal operating conditions. The Engine Control Module (PCM) monitors this voltage and determines if the exhaust gas is lean or rich. If the voltage input at the PCM is under approx. 0.45V, the exhaust is lean, and if the voltage input is over approx. 0.45V, the exhaust is rich. The PCM constantly monitors the HO2S signal during closed loop operation and compensates for a rich or lean condition by decreasing or increasing injector pluse width as necessary.
The rear heated oxygen sensor is mounted on the rear side of the Catalytic (warm-up catalytic converter) or in the rear exhaust pipe. It detects the catalyst efficiency. The rear heated oxygen sensor (HO2S) produces a voltage between 0V and 1V. This rear heated oxygen sensor is used to estimate the oxygen storage capacity. If a catalyst has good conversion properties, the oxygen fluctuations are smoothed by the oxygen storage capacity of the catalyst. If the conversion provided by the catalyst is low due to engine, poisoning or misfiring, then the oxygen fluctuations sre similar to signals from the front oxygen sensor.

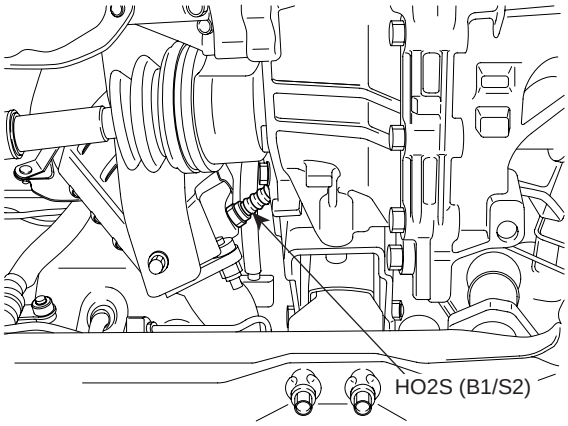

EFRF010B

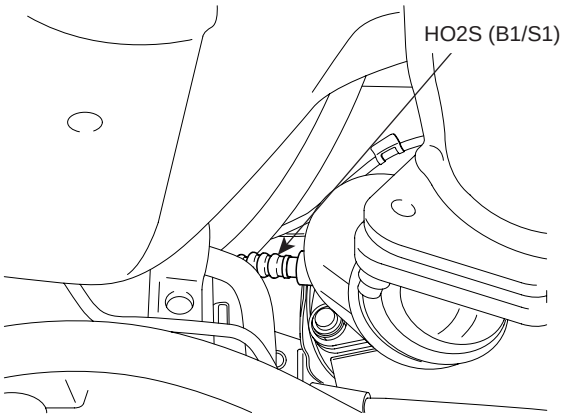

EFRF011B

CIRCUIT DIAGRAM

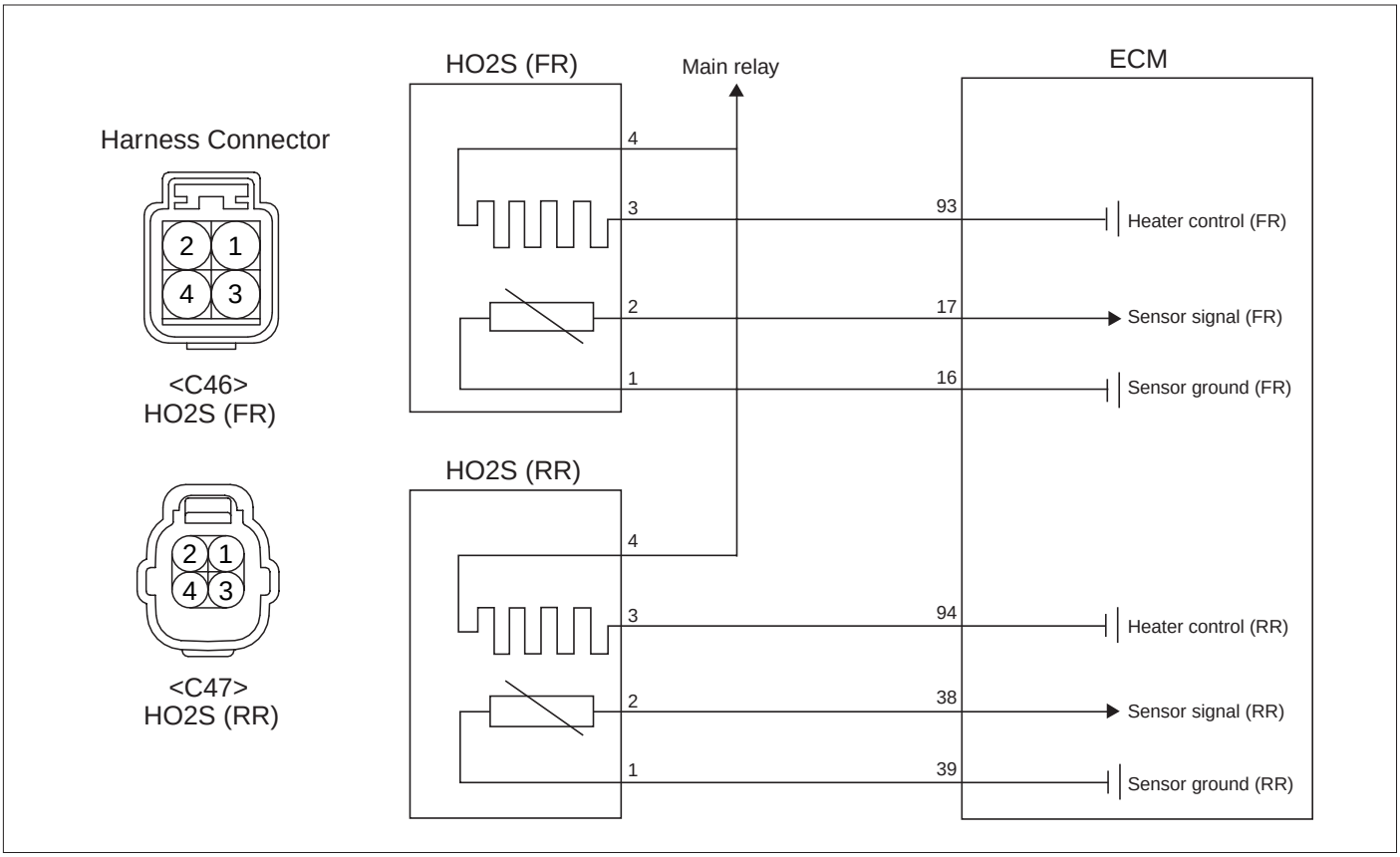

EFRF068A

SIGNAL WAVEFORM

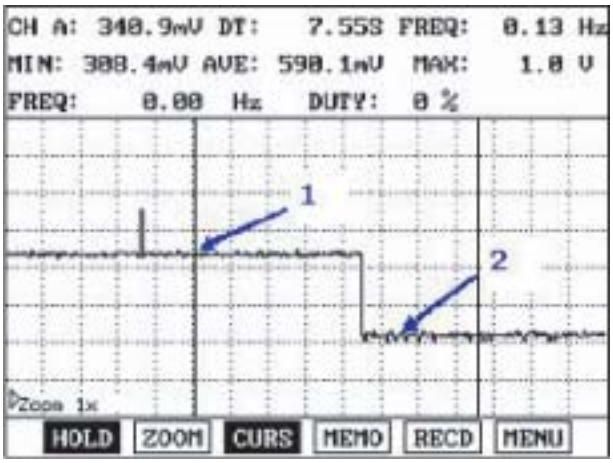

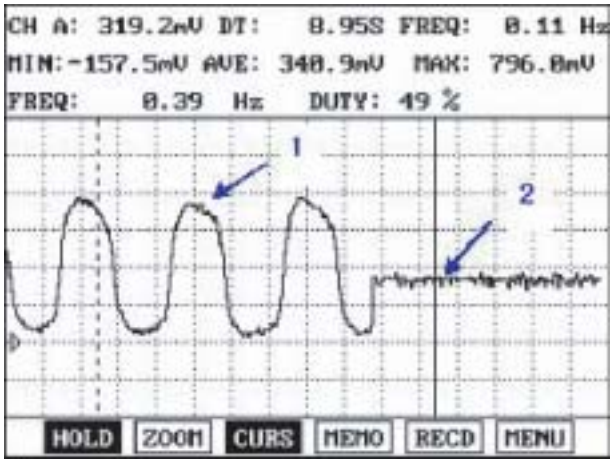

1: Normal status
2: Open in signal circuit
HO2S(Front) signal is switching from rich(above 0.45V) to lean (below 0.45V).
HO2S (Rear) signal outputs regularly.

EFRF069A

HARNESS INSPECTION

Refer to DTC P0030, P0031, P0032, P0036 ~ P0038, P0130, P0131, P0132, P0133, P0134, P0136 ~ P0140.

SENSOR INSPECTION

1. Engine starts and check signals of front and rear HO2S. (Refer to "SIGNAL WAVEFORM")

2. Measure resistance between the terminals 3 and 4 of front and rear HO2S connectors.

Specification : 3.3 ~ 4.1Ω at 20℃ (68°F)

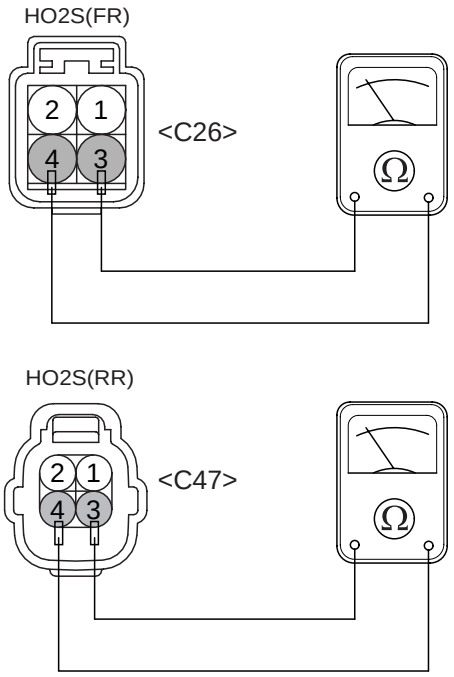

EFRFC26A

CAUTION

When disassembling sensor, remove smoothly by hand right after loosening torque.

KNOCK SENSOR (KS)

KNOCK SENSOR EB0EE4CE

The Knock Sensor is attached to the cylinder block and senses engine knocking. The sensor contains a piezo-electric element that converts vibration (or noise) into voltage signal and sends this signal to ECM. ECM uses this signal to suppress knocking by retarding ignition timing.

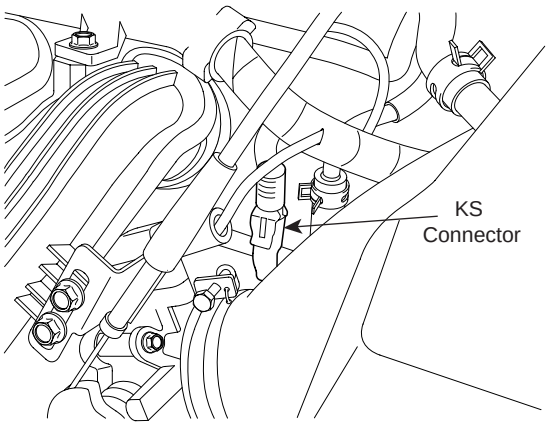

EFRF014B

CIRCUIT DIAGRAM

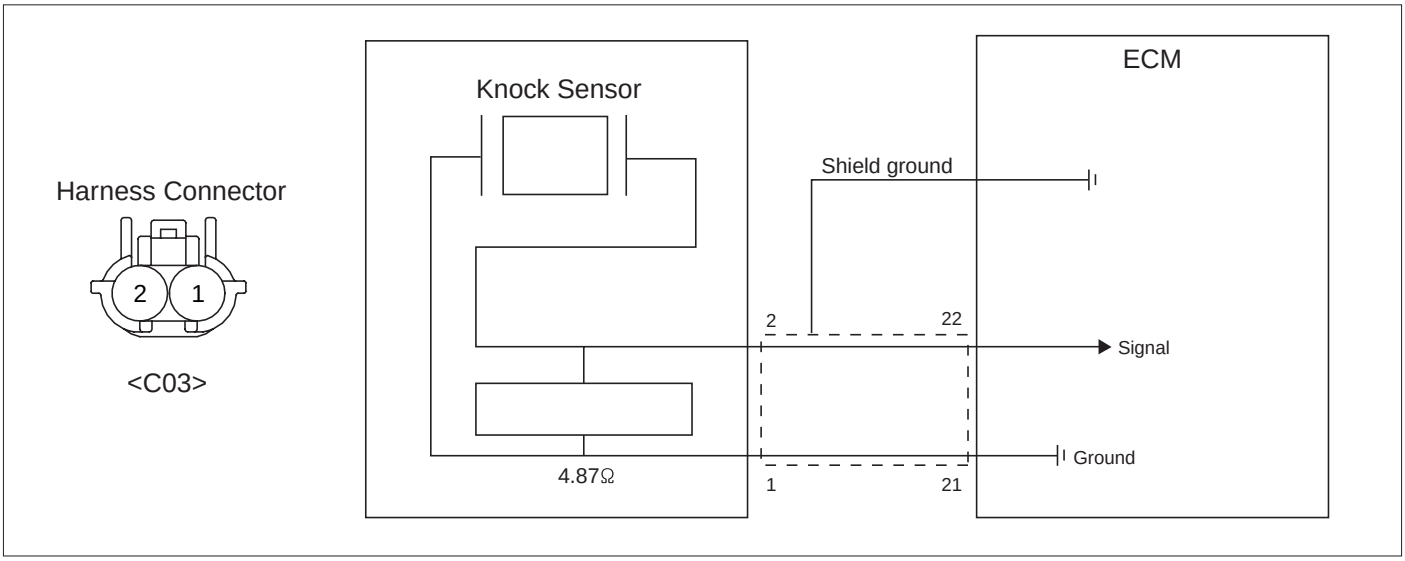

EFRF066A

HARNESS INSEPCTION

Refer to DTC P0325.

SENSOR INSPECTION

1. Disconnect knock sensor connector.
2. Measure resistance between the terminals 1 and 2 of knock sensor connector.

Specification : Approx. 5MΩ at 20℃(68°F)

3. Replace knock sensor if its resistance is not within the specification.

Torque : 160 ~ 250 kg·cm

ELECTRONIC THROTTLE SYSTEM (ETS)

COMPONENTS ED034F2E

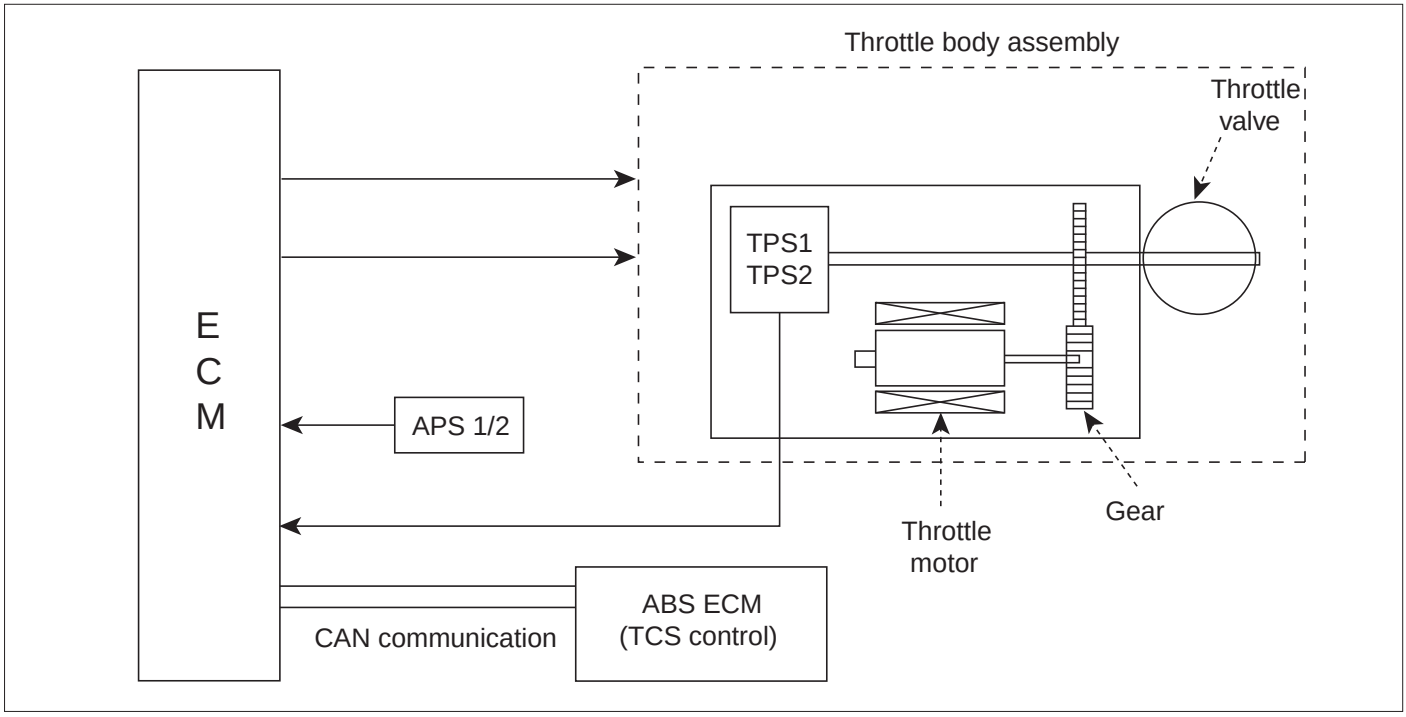

EFRF070A

ETC(Electronic Throttle Control) system is installed in throttle. ETC system controls the opening angle of throttle valve to operate throttle valve control, idle speed control, traction control, auto cruise control and so on.
ECM receives accelerator position sensor signals (APS1, APS2) and calculates appropriate throttle opening angle which is used to control the throttle angle of throttle motor. Throttle position sensor integrated into throttle body assembly detects the throttle opening angle (TPS1, TPS2) and sends it to ECM for feedback control.

CIRCUIT DIAGRAM

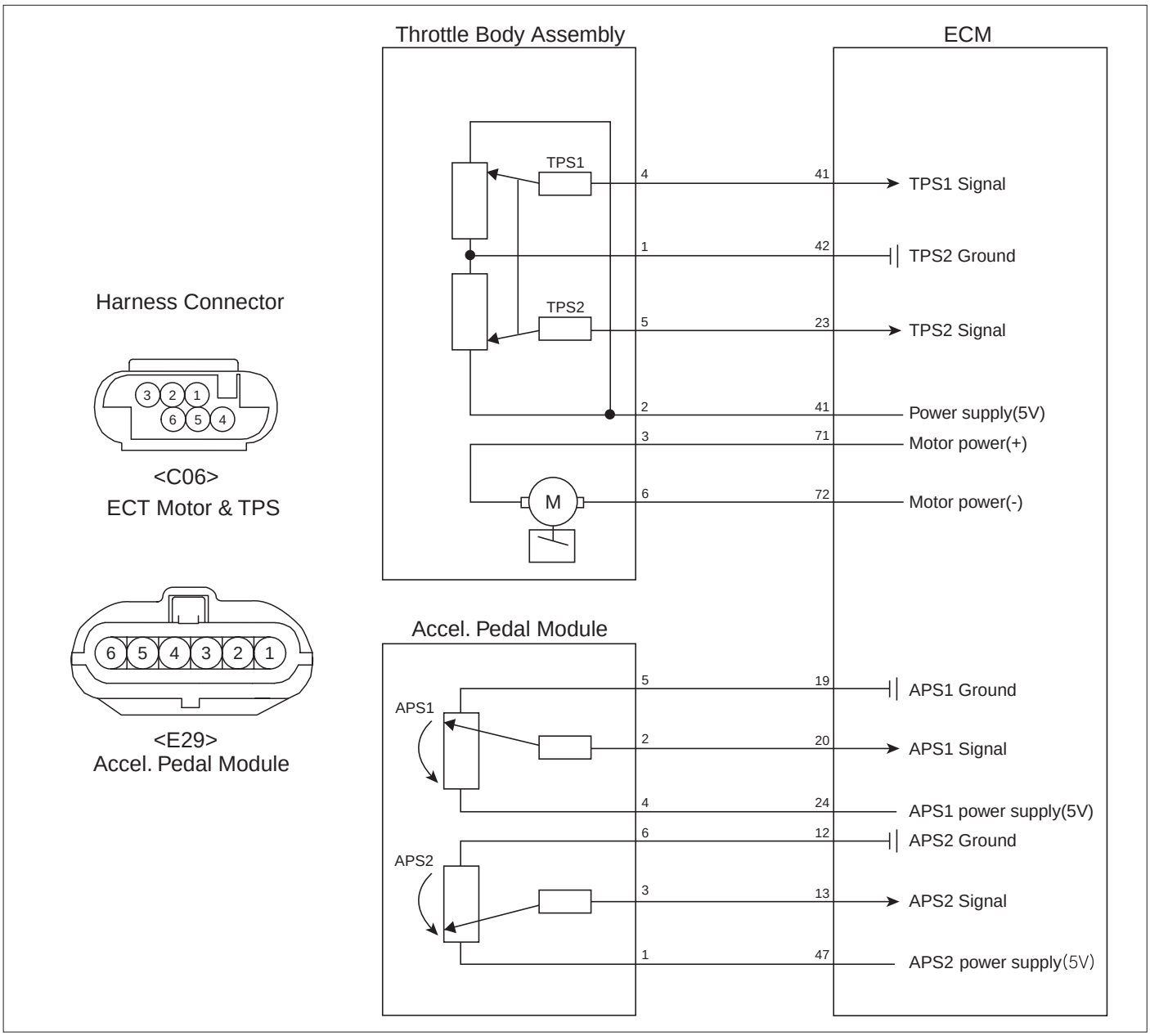

EFRF071A

FAIL-SAFE

ITEMS	FAIL-SAFE	
Throttle motor	Throttle valve stuck at 5°	
TPS 1, TPS 2 signal	TPS1 fault	Replace it with TPS2
	TPS2 fault	Replace it with TPS1
	TPS1,2 fault	Throttle valve stuck at 5°
APS 1, APS 2 signal	APS1 fault	Replace it with APS2
	APS2 fault	Replace it with APS1
	APS1,2 fault	Throttle valve stuck at 5°

※ When throttle valve is sticked at 5° engine speed is limited at below 1500rpm and vehicle speed at maximum 40~50 km/h.

ETC SYSTEM INITIALIZING

When ignition switch is turned from OFF to ON, ETC system learns the throttle angle as below procedures in 1.5sec.

1. Throttle valve moves from lim-home position to close position.

2. And then, it opens to about 15° and moves to limp-home position.

REPLACING ETC BODY

After replacing ETC body or ECM, a new TPS adaptation has to be preformed as below procedures.

1. Clear the previous TPS adaptation value using Hi-Scan(Pro).

1. HTUNDAI VEHICLE DIAGNOSIS ▼
MODEL : SONATA 05-
SYSTEM : ENGINE
GASOLINE
01. DIAGNOSTIC TROUBLE CODES
02. CURRENT DATA
03. FLIGHT RECORD
04. ACTUATION TEST
05. SIMU-SCAN
06. FREEZE FRAME DATA
07. RESETTING ADAPTIVE VALUES
08. IDENTIFICATION CHECK

EFRF100A

1.7. RESETTING ADAPTIVE VALUES	
RESET ALL ADAPTIVE VALUES	
CONDITION	IG. KEY ON ENGINE STOP
PRESS [REST], IF TOU ARE READY !	
REST	

EFRF101A

2. Turn the ignition switch off, and then turn it on.

3. Wait for 10sec. until TPS adaptation finishes.

⚠ ***CAUTION***

A new TPS adaptation has to be performed under environmental conditions as below.

- ***Battery voltage 〉 10V***
- ***Air temperature 〉 5.3***℃
- ***5.3***℃ 〈 ***Coolant temperature 〈 99.8***℃

INSPECTION

THROTTLE MOTOR

1. Disconnect the throttle body assembly connector.

2. Measure resistance as below.

Specification
Between pin 3 and 6 : 1.2 ~ 1.8 at 23℃(73.4°F)

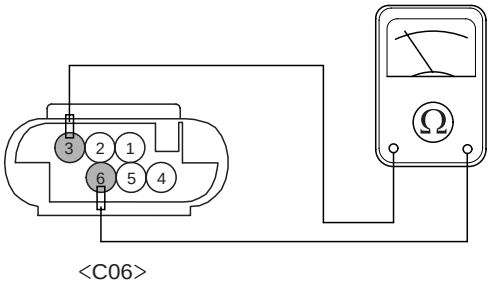

KFREC06A

3. Connect the throttle body assembly connector.

THROTTLE POSITION SENSOR (TPS)

1. Start engine and connect Hi-Scan(Pro) to data link connector.

2. Inspect TPS signal output with Hi-Scan(Pro) on condition as below.

Specification
<TPS1>
Idle : 0.3 ~ 0.7V
Wide open throttle : 4.45 ~ 4.85V
<TPS1>
Idle : 4.3 ~ 4.7V
Wide open throttle : 0.15 ~ 0.55V

3. Stop engine and disconnect throttle body assembly connector.

4. Measure resistance as below.

Specification
Between pin 1 and 2 : 0.88 ~ 1.63kΩ

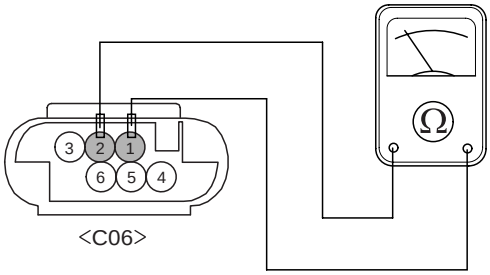

<C06>

KFREC06C

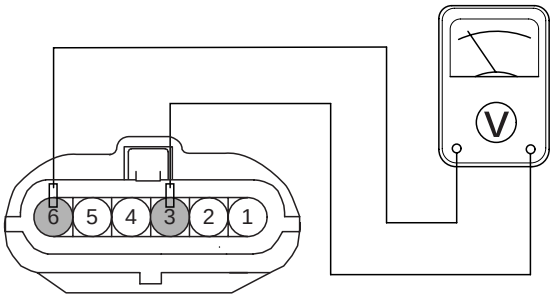

<E29>

KFREE29B

ACCELERATOR POSITION SENSOR (APS)

1. Disconnect APS connector and turn ignition switch on.

2. Measure voltage between the terminals 2 and 5 of APS connector as below.

Specification(APS1)
Not depressed : 0.58 ~ 0.93V
Depressed fully : 3.85 ~ 4.35V

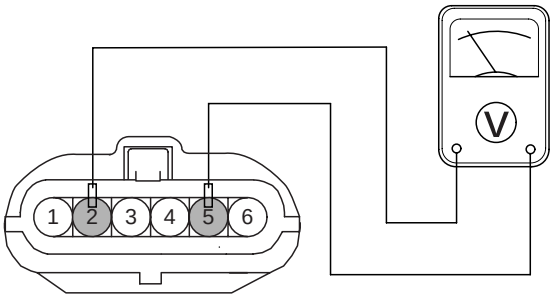

<Sensor connector>

EFRFE29A

3. Measure voltage between the terminals 3 and 5 of APS connector as below.

Specification(APS2)
Not depressed : 0.29 ~ 0.46V
Depressed : fully : 1.93 ~ 2.18V

CONTINUOUS VARIABLE VALVE TIMING(CVVT) SYSTEM

COMPONENTS ECFBFC1C

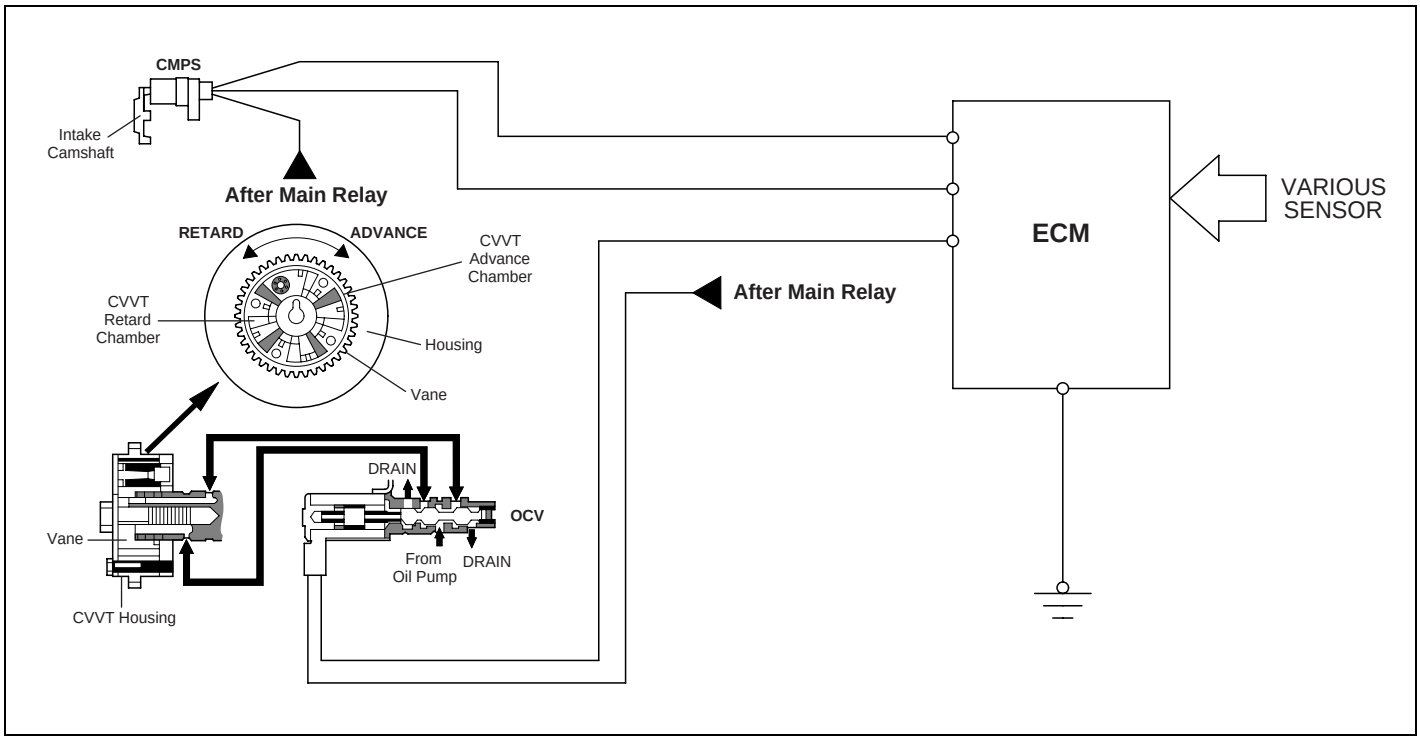

BEGE001P

DESCRIPTION ED4D3E84

The CVVT (Continuously Variable Valve Timing) which is installed on the exhaust camshaft controls intake valve open and close timing in order to improve engine performance.
The intake valve timing is optimized by CVVT system depending on engine rpm.

This CVVT system improves fuel efficiency and reduces NOx emissions at all levels of engine speed, vehicle speed, and engine load by EGR effect because of valve over-lap optimization.
The CVVT changes the phase of the intake camshaft via oil pressure.
It changes the intake valve timing continuously.

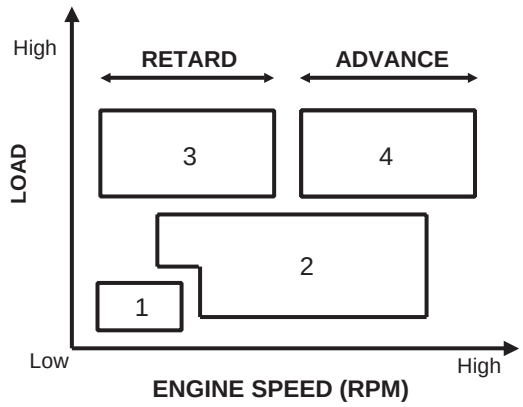

Driving Condition	Intake Valve Timing	Effect
Light load (1)	Retard	Stable combustion
Part load (2)	Advance	Enhanced fuel economy and exhaust emissions
High load& Low rpm (3)	Advance	Enhanced torque
High load& High rpm (4)	Retard	Enhanced Power

BEGE001Q

OPERATION EABEEC6C

The CVVT system makes continuous intake valve timing changes based on operating conditions.
Intake valve timing is optimized to allow the engine to produce maximum power.
Cam angle is advanced to obtain the EGR effect and reduce pumping loss. The intake valve is closed quickly to reduce the entry of the air/fuel mixture into the intake port and improve the changing effect.
Reduces the cam advance at idle, stabilizes combustion, and reduces engine speed.
If a malfunction occurs, the CVVT system control is disabled and the valve timing is fixed at the fully retarded position.

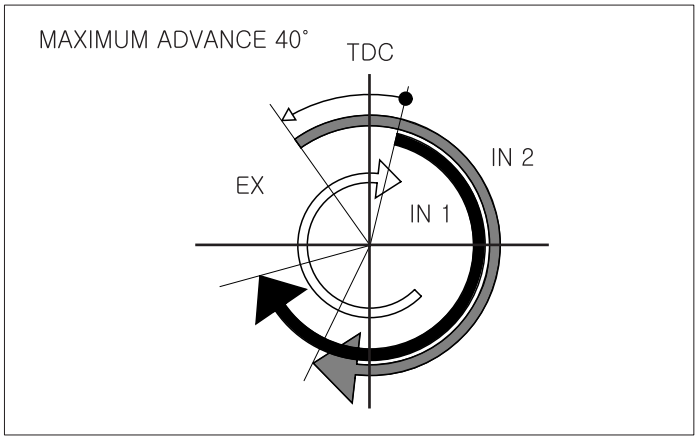

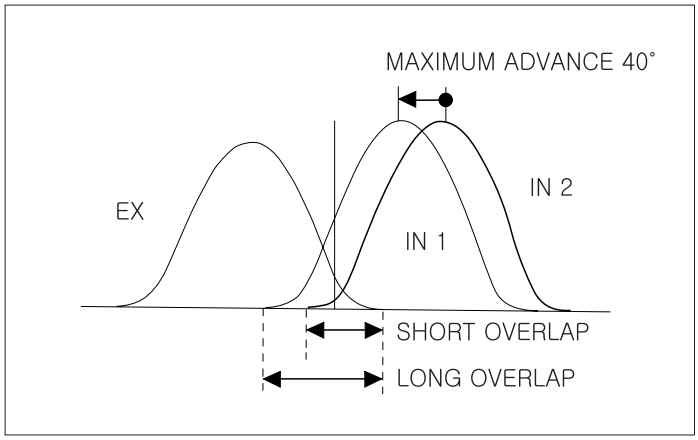

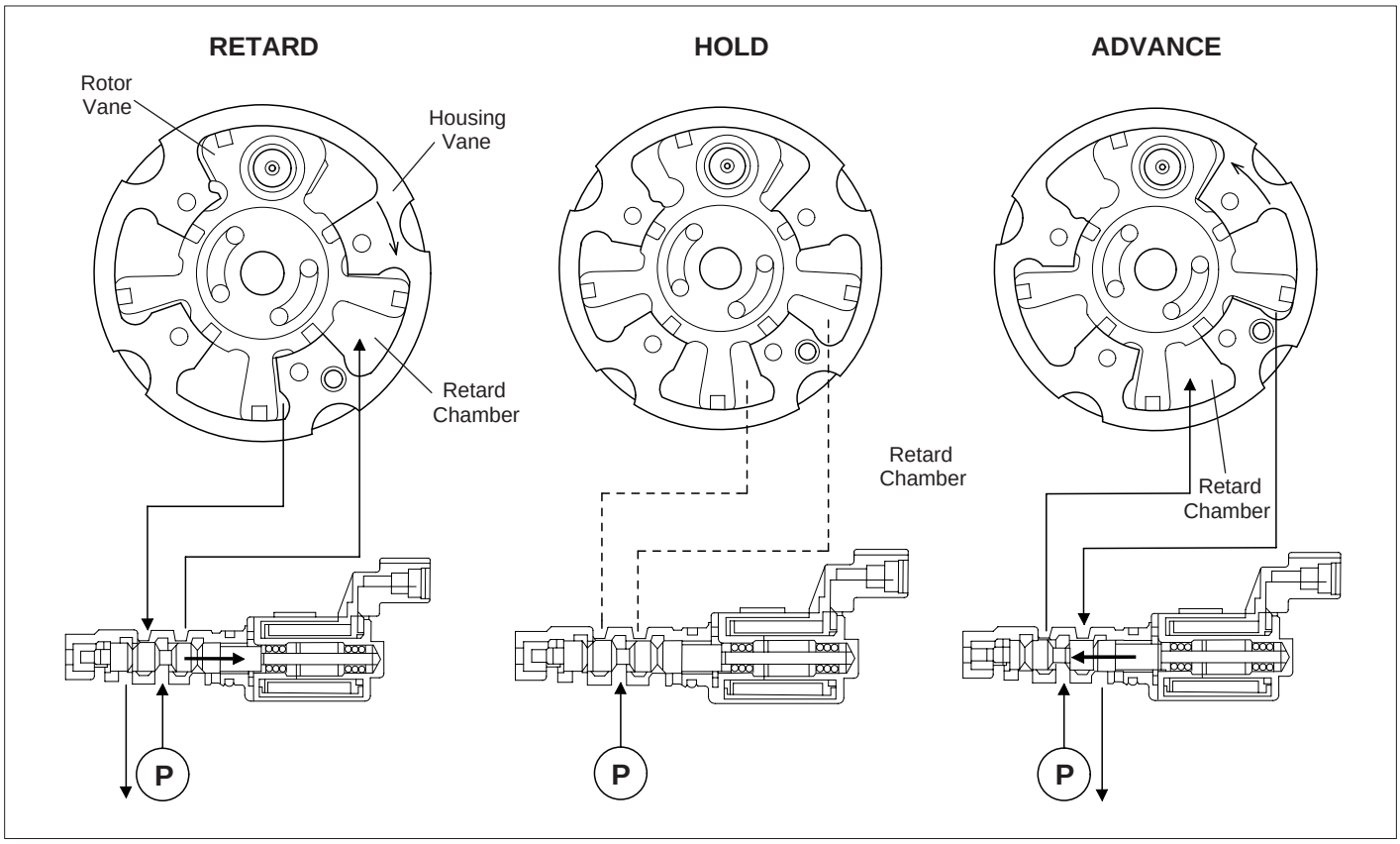

BEGE001R

1. The above figure shows the relative operation structures of the housing vane to the rotor vane.

2. If the CVVT is held a certain control angle, to hold this state, oil is replenished as much as oil leaks from the oil pump.

The OCV (Oil-flow Control Valve) spool location at this time is as follows.
Oil pump → Advance oil chamber (Little by little open the inflow side to the advance oil chamber) → Almost close the drain side

Be sure there might be a difference in the position according to the engine running state (rpm, oil temperature, and oil pressure).

INSPECTION EC784CEB

COMPONENT INSPECTION

1. Inspect the CVVT system.
2. Measure the resistance of OCV.

RESISTANCE

Temperature ℃(°F)	Resistance (Ω)
0(32)	6.2 ~ 7.4
20(68)	6.8 ~ 8.0
40(104)	7.4 ~ 8.6
60(140)	8.0 ~ 9.2
80(176)	8.6 ~ 9.8

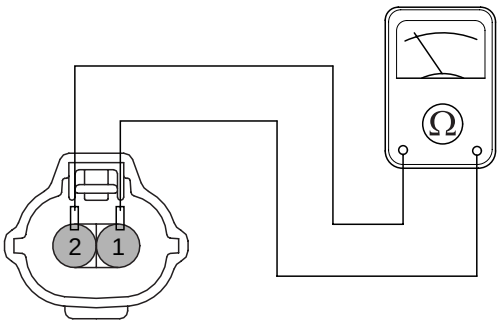

<C25>

KFREC25A

3. Measure the resistance of OTS.

RESISTANCE

Temperatuer ℃(°F)	Resistance(kΩ)
-40(-40)	52.15
-30(-22)	28.82
-10(-14)	9.80
0(32)	6
20(68)	2.45
40(104)	1.10
50(122)	0.77
60(140)	0.54
70(158)	0.39
90(194)	0.22
100(212)	0.16
110(230)	0.13
120(248)	0.10
130(266)	0.08

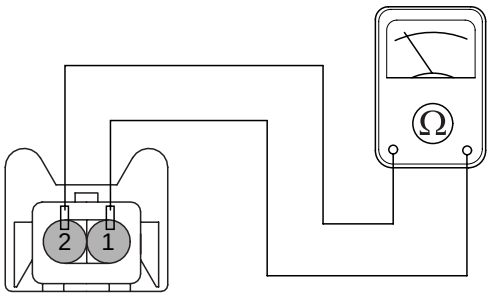

<C35>

KFREC35A

HARNESS INSPECTION

OCV : Refer to DTC P0076, P0077.
OTS : Refer to DTC P0196, P0197, P0198.

DTC TROUBLESHOOTING PROCEDURES

DTC TROUBLESHOOTING PROCEDURES E3257E7D

INSPECTION CHART FOR DIAGNOSIS TROUBLE CODES(DTC)

DTC	DESCRIPTION	MIL			PAGE
		EURO-III	EURO- II	LEADED	
P0011	Camshaft Position-Timing Over-Advanced or System Performance(Bank 1)	●	▲	▲	FL-66
P0016	Crankhaft Position-Camshaft Position Correlation(Bank 1)	●	▲	▲	FL-74
P0030	O2 Sensor Heater - Heater Control Circuit(Bank 1/Sensor 1)	●	▲	-	FL-77
P0031	O2 Sensor Heater Circuit Low(Bank 1/Sensor 1)	●	▲	-	FL-83
P0032	O2 Sensor Heater Circuit High(Bank 1/Sensor 1)	●	▲	-	FL-85
P0036	O2 Sensor Heater - Heater Control Circuit(Bank 1/Sensor 2)	●	-	-	FL-87
P0037	O2 Sensor Heater Circuit Low(Bank 1/Sensor 2)	●	-	-	FL-93
P0038	O2 Sensor Heater Circuit High(Bank 1/Sensor 2)	●	-	-	FL-95
P0076	Intake Valve Control Solenoid Circuit Low(Bank 1)	●	▲	▲	FL-97
P0077	Intake Valve Control Solenoid Circuit High(Bank 1)	●	▲	▲	FL-104
P0101	Mass or Volume Air Flow Circuit Range/Performance Problem	●	●	●	FL-106
P0102	Mass or Volume Air Flow Circuit Low Input	●	●	●	FL-112
P0103	Mass or Volume Air Flow Circuit High Input	●	●	●	FL-116
P0111	Intake Air Trmperature Circuit Range/Performance	●	▲	▲	FL-119
P0112	Intake Air Temperature Circuit Low Input	●	▲	▲	FL-124
P0113	Intake Air Temperature Sensor/Switch "A" Circuit High Input	●	▲	▲	FL-126
P0116	Engine Coolant Temperature Sensor/Switch "A" Circuit Range / Performance	●	●	●	FL-128
P0117	Engine Coolant Temperature Sensor/Switch "A" Circuit Low Input	●	●	●	FL-133
P0118	Engine Coolant Temperature Circuit High Input	●	●	●	FL-136
P0119	Engine Coolant Temperature Circuit Intermittent	●	●	●	FL-138
P0121	Throttle / Pedal Position Circuit Range/Performance Problem	●	●	●	FL-139
P0122	Throttle / Pedal Position Circuit Low Input	●	●	●	FL-145
P0123	Throttle / Pedal Position Circuit High Input	●	●	●	FL-150

DTC	DESCRIPTION	MIL			PAGE
		EURO-III	EURO- II	LEADED	
P0130	O2 Sensor Circuit(Bank 1/ Sensor 1)	●	▲	-	FL-153
P0131	O2 Sensor Circuit Low Input(Bank 1 / Sensor 1)	●	▲	-	FL-158
P0132	O2 Sensor Circuit High Input(Bank 1 / Sensor 1)	●	▲	-	FL-160
P0133	O2-Sensor Circuit Slow Response (Bank 1 / Sensor 1)	●	▲	-	FL-162
P0134	O2 Sensor Circuit No Activity Detected (Bank 1 / Sensor 1)	●	▲	-	FL-166
P0136	O2 Sensor Circuit Malfunction(Bank 1 / Sensor 2)	●	-	-	FL-169
P0137	O2 Sensor Circuit Low Input (Bank 1 / Sensor 2)	●	-	-	FL-174
P0137	O2 Sensor Circuit High Input (Bank 1 / Sensor 2)	●	-	-	FL-176
P0139	O2 Sensor Circuit Slow Response	●	-	-	FL-178
P0140	O2 Sensor Circuit No Activity Detected (Bank 1 / Sensor 2)	●	-	-	FL-182
P0170	O2 Sensor System - Lambda Controller at the Limit (Bank 1)	●	-	-	FL-185
P0196	Engine Oil Temp. Sensor Range / Performance	●	▲	▲	FL-190
P0197	Engine Oil Temp. Sensor Low Input	●	▲	▲	FL-195
P0198	Engine Oil Temp. Sensor High Input	●	▲	▲	FL-198
P0221	Throttle/Pedal Position Sensor/Switch "B" Circuit Range/Performance	●	●	●	FL-201
P0222	Throttle/Pedal Position Sensor/Switch "B" Circuit Low Input	●	●	●	FL-207
P0223	Throttle/Pedal Position Sensor/Switch "B" Circuit High Input	●	●	●	FL-210
P0230	Fuel Pump Circuit Malfunction	▲	▲	▲	FL-213
P0261	Cylinder 1 - Injector Circuit Low	●	●	●	FL-218
P0262	Cylinder 1 - Injector Circuit High	●	●	●	FL-223
P0264	Cylinder 2 - Injector Circuit Low	●	●	●	FL-218
P0265	Cylinder 2 - Injector Circuit High	●	●	●	FL-223
P0267	Cylinder 3 - Injector Circuit Low	●	●	●	FL-218
P0268	Cylinder 3 - Injector Circuit High	●	●	●	FL-223
P0270	Cylinder 4 - Injector Circuit Low	●	●	●	FL-218
P0271	Cylinder 4 - Injector Circuit High	●	●	●	FL-223
P0300	Random/Multiple Cylinder Misfire Detected	●	-	-	FL-228
P0301	Cylinder 1 - Misfire detected	●	-	-	FL-234
P0302	Cylinder 2 - Misfire detected	●	-	-	FL-234
P0303	Cylinder 3 - Misfire detected	●	-	-	FL-234
P0304	Cylinder 4 - Misfire detected	●	-	-	FL-234

DTC	DESCRIPTION	MIL			PAGE
		EURO-III	EURO- II	LEADED	
P0315	Crankshaft Position System Variation Not Learned	▲	-	-	FL-240
P0325	Knock Sensor 1 Circuit Malfunction	▲	▲	▲	FL-245
P0335	Crankshaft Position Sensor Circuit Malfunction	●	▲	▲	FL-250
P0336	Crankshaft Position Sensor Circuit Range/Performance	●	▲	▲	FL-256
P0340	Camshaft Position Sensor Circuit Malfunction(Bank1 or Single Sensor)	●	▲	▲	FL-258
P0341	Camshaft Position Sensor Circuit Range/Performance(Bank1 or Single)	●	▲	▲	FL-264
P0420	Catalyst System Efficiency below Threshold (Bank 1)	●	-	-	FL-266
P0444	Evap. Emission Ctrl. System - Purge Ctrl. Valve Circuit Open	●	-	-	FL-269
P0445	Evap. Emission Ctrl. System - Purge Ctrl. Valve Circuit Shorted	●	-	-	FL-274
P0501	Vehicle Speed Sensor Range / Performance	-	▲	▲	FL-400
P0504	Brake Switch “ A” /” B” Correlation	▲	▲	▲	FL-277
P0506	Idle Control System - RPM lower than expected	●	▲	▲	FL-282
P0507	Idle Control System - RPM higher than expected	●	▲	▲	FL-286
P0551	Power Steering Switch Circuit Malfunction	▲	-	-	FL-288
P0552	Power Steering Pressure Sensor/Switch Circuit Low Input	▲	-	-	FL-293
P0553	Power Steering Pressure Sensor/Switch Circuit High Input	▲	-	-	FL-299
P0560	System Voltage Malfunction	▲	▲	▲	FL-301
P0562	System Voltage Low	●	▲	▲	FL-306
P0563	System Voltage High	●	▲	▲	FL-309
P0564	Cruise Control Multi-Function Input "A" Circuit	▲	▲	▲	FL-311
P0600	Serial Communication Link Malfunction	●	▲	▲	FL-316
P0605	Internal Control Module Read Only Memory(ROM) Error	●	●	●	FL-321
P0625	Generator Field/F Terminal Circuit Low	▲	▲	▲	FL-324
P0626	Generator Field/F Terminal Circuit High	▲	▲	▲	FL-329
P0638	Throttle Actuator Control Range/Performance	●	▲	▲	FL-331
P0642	Sensor Reference Voltage "A" Circuit Low	▲	▲	▲	FL-337
P0643	Sensor Reference Voltage "A" Circuit High	▲	▲	▲	FL-341
P0650	Malfunction Indicator Lamp(MIL) Control Circuit Malfunction	▲	-	-	FL-343
P0652	Sensor Reference Voltage "B" Circuit Low	●	●	●	FL-347
P0653	Sensor Reference Voltage "B" Circuit High	●	●	●	FL-351

DTC	DESCRIPTION	MIL			PAGE
		EURO-III	EURO- II	LEADED	
P0698	Sensor Reference Voltage "C" Circuit Low	▲	▲	▲	FL-353
P0699	Sensor Reference Voltage "C" Circuit High	▲	▲	▲	FL-357
P0700	TCU Request for MIL On / Freeze Frame to ECU via CAN	●	▲	▲	FL-359
P2096	Post Catalyst Fuel Trim System Too Lean (Bank 1)	●	▲	▲	FL-360
P2097	Post Catalyst Fuel Trim System Too Rich (Bank 1)	●	▲	▲	FL-364
P2101	Throttle Actuator Control Motor Circuit Range/Performance	●	●	●	FL-365
P2118	Throttle Actuator Control Motor Current Range/Performance	●	●	●	FL-371
P2119	Throttle Actuator Control Throttle Body Range/Performance	●	●	●	FL-376
P2122	Throttle/Pedal Position Sensor/Switch "D" Circuit Low Input	●	●	●	FL-382
P2123	Throttle/Pedal Position Sensor/Switch "D" Circuit High Input	●	●	●	FL-389
P2127	Throttle/Pedal Position Sensor/Switch "E" Circuit Low Input	●	●	●	FL-392
P2128	Throttle/Pedal Position Sensor/Switch "E" Circuit High Input	●	●	●	FL-395
P2138	Throttle/Pedal Position Sensor/Switch “ D” / “ E” Voltage Correlation	●	●	●	FL-397
P2159	Vehicle Speed Sensor “ B” Range/Performance	●	▲	▲	FL-400
P2187	System Too Lean at Idle (←Additive) (Bank 1)	●	▲	▲	FL-405
P2188	System Too Rich at Idle (Bank 1)	●	▲	▲	FL-409
P2191	System Too Lean at Higher Load (←Multiple) (Bank 1)	●	▲	▲	FL-411
P2192	System Too Rich at Higher Load (Bank 1)	●	▲	▲	FL-415

● : MIL ON & FAULT CODE MEMORY
▲ : MIL OFF & FAULT CODE MEMORY

DTC P0011 "A" CAMSHAFT POSITION-TIMING OVER-ADVANCED OR SYSTEM PERFORMANCE (BANK 1)

COMPONENT LOCATION E5FDA1E3

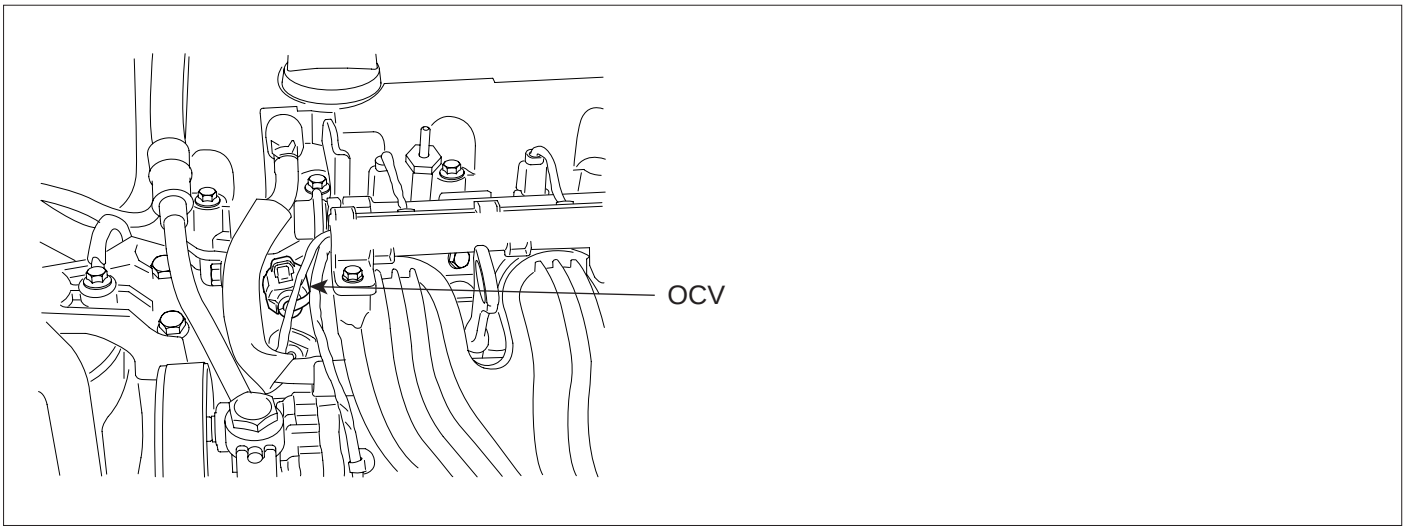

EFRF021A

GENERAL DESCRIPTION E7F7CC95

The CVVT (Continuously Variable Valve Timing) system is installed to the chain sprocket of the exhaust camshaft. There is no variation in valve timing of the exhaust cam because the exhaust camshaft is driven by the timing belt. The timing of the intake cam is varied by the relative operation the CVVT vane to the housing. This system helps the engine decrease exhaust gases and increase engine power and fuel economy by changing the valve open/close timing of the intake camshaft.

DTC DESCRIPTION E1E166CF

The deviation of the camshaft position from the target point is evaluated during stable driving condition. The ECM accumulates this deviation for a certain period and sets DTC P0011 when the accumulated deviation is too high. The target camshaft position is predetermined value depending on engine speed and throttle angle in the ECM.

DTC DETECTING CONDITION E7BD8FD6

Item		Detecting Condition	Possible Cause
DTC Strategy		• Diagnosis via comparison of camshaft position and setpoint and quantities	• Faulty Oil leak • Faulty Oil pump • Faulty Intake OCV
Enable Conditions	Case1	• CVVT control : enabled • 11V 〈 Battery voltage • Engine speed(RPM) 〈 5000rpm • No relevant failure • 20℃(68°F) 〈 Engine oil temp. 〈 110℃(230°F)	
	Case2	• CVVT control : enabled • 11V 〈 Battery voltage • 800 〈 Engine speed(RPM) 〈 5000rpm • No relevant failure • 20℃(68°F) 〈 Engine oil temp. 〈 110℃(230°F)	
Threshold Value	Case1	• Enduring camshaft position dynamic deviation - Actuator jammed or slow responsing 〈 8°CRK	
	Case2	• Integral of Camshaft position setpoint - Camshaft position actual value > 150°CRK	
Diagnostic Time	Case1	• 10 * CAM edge	
	Case2	• 11 * CAM edge	

SPECIFICATION E45FF25C

Intake OCV	Normal Parameter
Insulation Resistance (Ω)	Above 50 MΩ

Temp.(℃)	Temp.(°F)	Resistance(Ω)	Temp.(℃)	Temp.(°F)	Resistance(Ω)
0	32	6.2 ~ 7.4	60	140	8.0 ~ 9.2
10	50	6.5 ~ 7.7	70	158	8.3 ~ 9.5
20	68	6.8 ~ 8.0	80	176	8.6 ~ 9.8
30	86	7.1 ~ 8.3	90	194	8.9 ~ 10.1
40	104	7.4 ~ 8.6	100	212	9.2 ~ 10.4
50	122	7.7 ~ 8.9			

SCHEMATIC DIAGRAM EE1BFEC2

[Circuit Diagram]

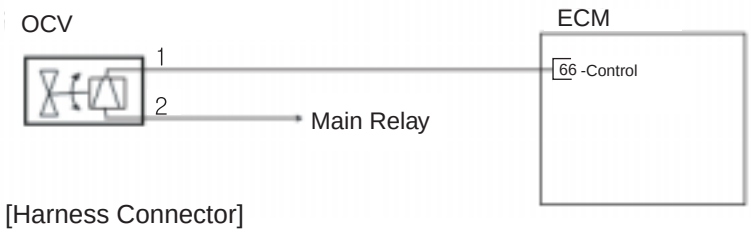

[Connection Information]

Terminal	Connected to	Funtion
1	ECM Terminal 66	Control
2	Main Relay	Power

[Harness Connector]

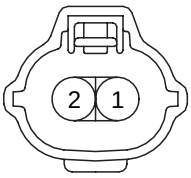

C25

ECM

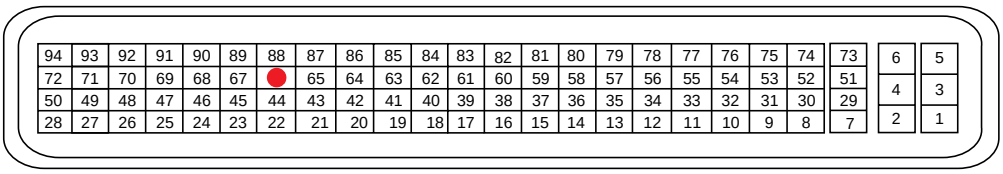

C44

EFRF300A

SIGNAL WAVEFORM AND DATA ECC4CFE1

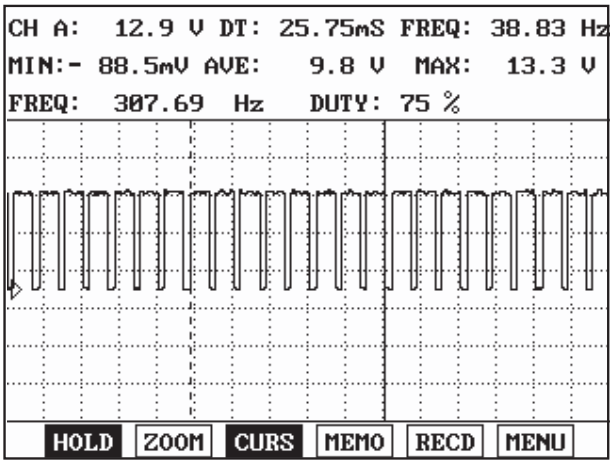

Fig.1

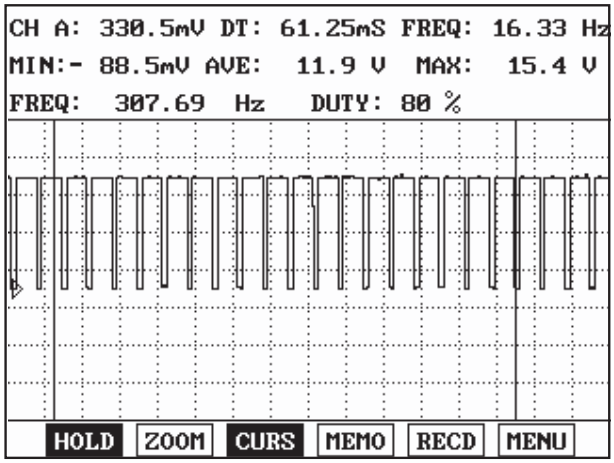

Fig.2

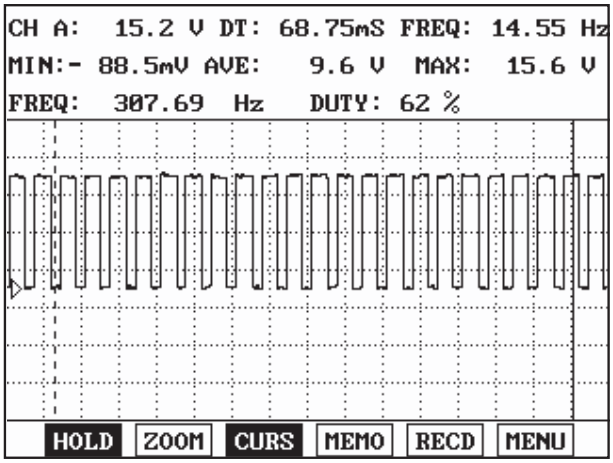

Fig.3

Fig 1) Normal OCV waveform with ignition "ON"
Fig 2) Normal OCV duty ratio with idling : Approx. 12~20%
Fig 3) Normal OCV duty ration with maintaining 3000RPM : Approx. 30~60%

EFRF200A

MONITOR DTC STATUS E93CB6EF

1. Connect scan tool and select "Diagnostic Trouble Codes(DTCs)" mode.
2. Press F4(DTAL) to select DTC information from the DTCs menu.
3. Confirm that "DTC Readiness Flag" indicates "Complete". If not, drive the vehicle within conditions noted in the freeze frame data or enable conditions.
4. Read "DTC Status" parameter.

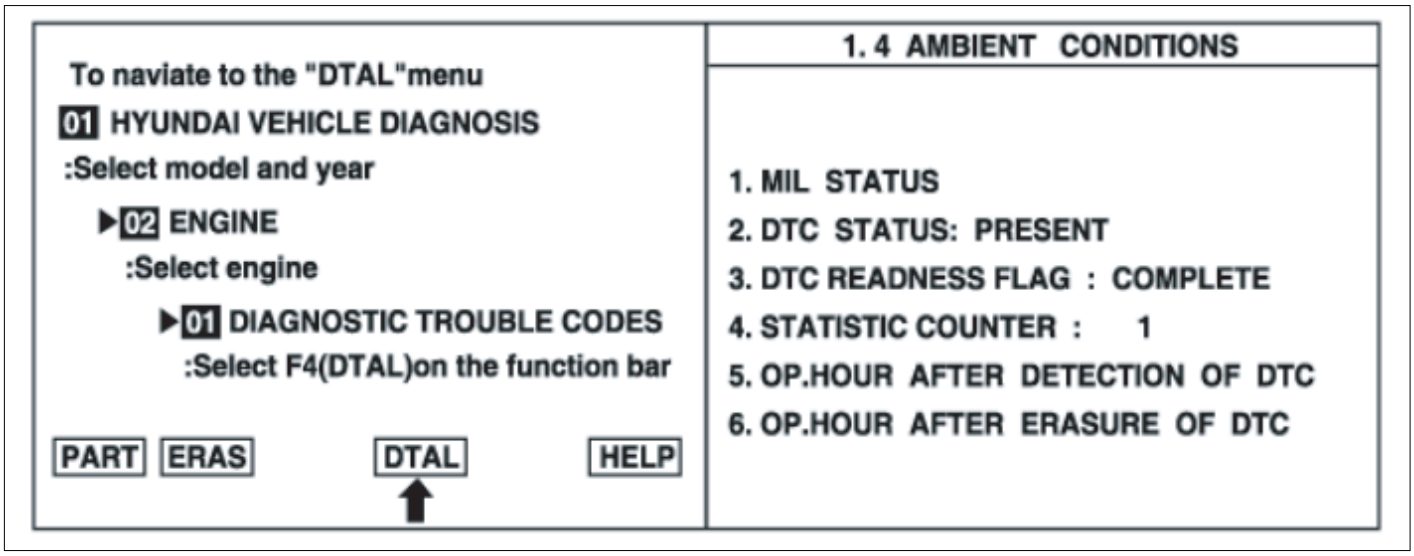

EFRF200D

5. Is parameter displayed "History(Not Present) fault"?

NOTE

- *History (Not Present) fault : DTC occurred but has been cleared.*
- *Present fault : DTC is occurring at present time.*

YES

▶ Fault is intermittent caused by poor contact in the sensor's and/or ECM's connector or was repaired and ECM memory was not cleared. Thoroughly check connectors for looseness, poor connection, bending, corrosion, contamination, deterioration, or damage. Repair or replace as necessary and then go to "Verification of Vehicle Repair" procedure.

NO

▶ Go to next step as below.

COMPONENT INSPECTION EE7D0FEB

CHECK INTAKE OCV RESISTANCE

1. Ignition "OFF"
2. Disconnect intake OCV connector.
3. Measure resistance between terminals 1 and 2 of the intake OCV connector.(Component side)

SPECIFICATION

Temp.(℃)	Temp.(℉)	Resistance(Ω)	Temp.(℃)	Temp.(℉)	Resistance(Ω)
0	32	6.2 ~ 7.4	60	140	8.0 ~ 9.2
10	50	6.5 ~ 7.7	70	158	8.3 ~ 9.5
20	68	6.8 ~ 8.0	80	176	8.6 ~ 9.8
30	86	7.1 ~ 8.3	90	194	8.9 ~ 10.1
40	104	7.4 ~ 8.6	100	212	9.2 ~ 10.4
50	122	7.7 ~ 8.9			

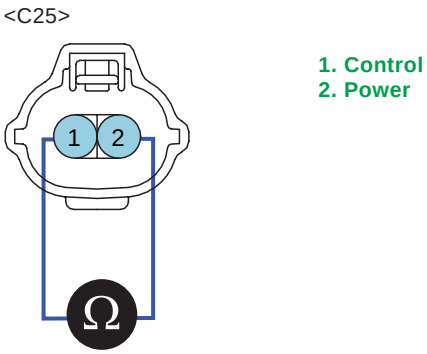

4. Is resistance within the specification?

YES

▶ Go to next step as below

NO

▶ Check OCV for contamination, deterioration, or damage. Substitute with a known-good OCV and check for proper operation. If the problem is corrected, replace OCV and then go to "Verification of Vehicle Repair" procedure

INTAKE OCV OPERATION CHECK

[WITH SCAN TOOL]

1. Reconnect OCV connector
2. Ignition "ON" & Engine "OFF"
3. Install scantool and select "CVVT VALVE" on the Actuation Test mode
4. Activates "CVVT VALVE" by pressing "STRT(F1)" key(should hear a faint click from intake OCV)
5. Repeat this procedure 4 or 5 times to ensure intake OCV reliability.

[WITHOUT SCAN TOOL]

6. Ignition "OFF".
7. Remove the intake OCV from the engine.
8. Visually check the Spool Column of intake OCV for contamination.
9. Connect 12V and a ground to 2 and 1 of the solenoid(Component side). Verify that spool column move to left as shown in the figure.
10. Disconnect 12V and verify that spool column move to original condition.

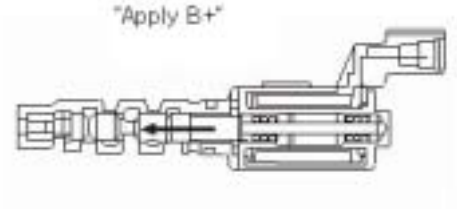

KFRE011

11. Has a problem been found?

YES

▶ Repair or replace as necessary and go to "Verification of Vehicle Repair" procedure

NO

▶ Go to next step as below

CHECK THE SUSPECTED AREA

1. Check the following items
   - Intake OCV filter for sticking or contamination
   - Engine oil and it's level
   - Engine oil filter

2. Is there any problem?

YES

▶ Repair or replace the intake OCV and go to "Verification of Vehicle Repair" procedure

NO

▶ Go to "Terminal and Connector Inspection" procedure

TERMINAL AND CONNECTOR INSPECTION E44E5721

1. Many malfunctions in the electrical system are caused by poor harness(es) and terminals. Faults can also be caused by interference from other electrical systems, and mechanical or chemical damage.

2. Thoroughly check connectors for looseness, poor connection, bending, corrosion, contamination, deterioration, or damage.

3. Has a problem been found?

YES

▶ Repair as necessary and go to "Verification of Vehicle Repair" procedure

NO

▶ Check for poor connection between ECM and component: backed out terminal, improper mating, broken locks or poor terminal to wire connection. Repair as necessary and go to "Verification of Vehicle Repair" procedure

VERIFICATION OF VEHICLE REPAIR EBE528AE

After a repair, it is essential to verify that the fault has been corrected.

1. Connect scan tool and select "Diagnostic Trouble Codes(DTCs)" mode
2. Press F4(DTAL) and confirm that "DTC Readiness Flag" indicates "Complete". If not, drive the vehicle within conditions noted in the freeze frame data or enable conditions
3. Read "DTC Status" parameter
4. Is parameter displayed "History(Not Present) fault"?

YES

▶ System performing to specification at this time. Clear the DTC

NO

▶ Go to the applicable troubleshooting procedure.

DTC P0016 CRANKSHAFT POSITION-CAMSHAFT POSITION CORRELATION (BANK 1 SENSOR A)

COMPONENT LOCATION E9D1A6F6

Refer to DTC P0011.

GENERAL DESCRIPTION ED4A8DBF

Refer to DTC P0011.

DTC DESCRIPTION E193CB5F

This diagnosis checks the camshaft position plausibility whether the expected range plus some margin is not violated that might be caused by a wrong engine repair, or a chain/belt misalignment. DTC P0016 is set when actual camshaft position is too much retarded or advanced than full retard position or full advance position. To continue the adjustment in such case could lead to a damage of the engine by hitting the valves with the piston.

DTC DETECTING CONDITION EDDF4337

Item	Detecting Condition	Possible Cause
DTC Strategy	• Camshaft reference range in out of designed engine position from crankshaft	• Abnormal installation of camshaft • Abnormal installation of crankshaft • Abnormal installation of tone wheel
Enable Conditions	• No engine reverse detection • Camshaft position measurement valid	
Threshold Value	• Adapted CAM edge position - mechanical edge position 〈-15°CRK or 〉 15°CRK	
Diagnostic Time	• 80 * CAM edge	

SIGNAL WAVEFORM AND DATA E7E2C872

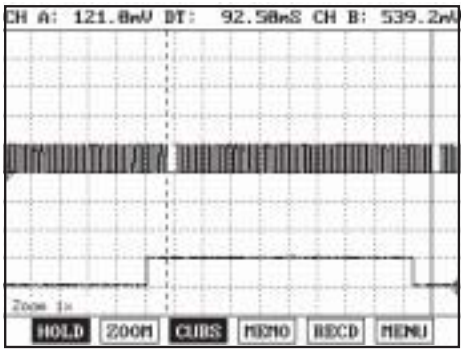

Fig.1

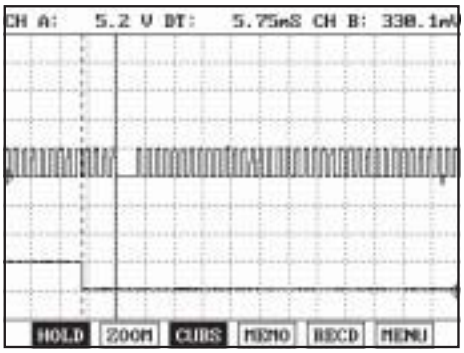

Fig.2

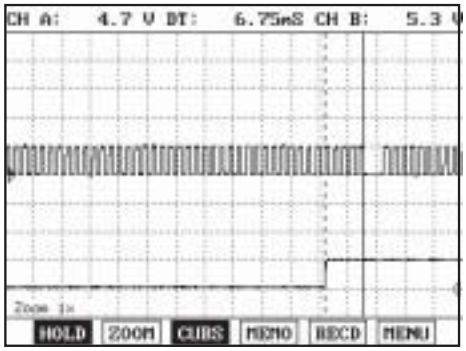

Fig.3

Fig.1) The square wave signal should be smooth and without any distortion.
Fig.2,3)The CMPS falling(rising) edge is coincided with 3~5 tooth of the CKP from one longer signal(missing tooth)

EFRF200N

MONITOR DTC STATUS EEFC8349

1. Connect scan tool and select "Diagnostic Trouble Codes(DTCs)" mode.

2. Press F4(DTAL) to select DTC information from the DTCs menu.

3. Confirm that "DTC Readiness Flag" indicates "Complete". If not, drive the vehicle within conditions noted in the freeze frame data or enable conditions.

4. Read "DTC Status" parameter.

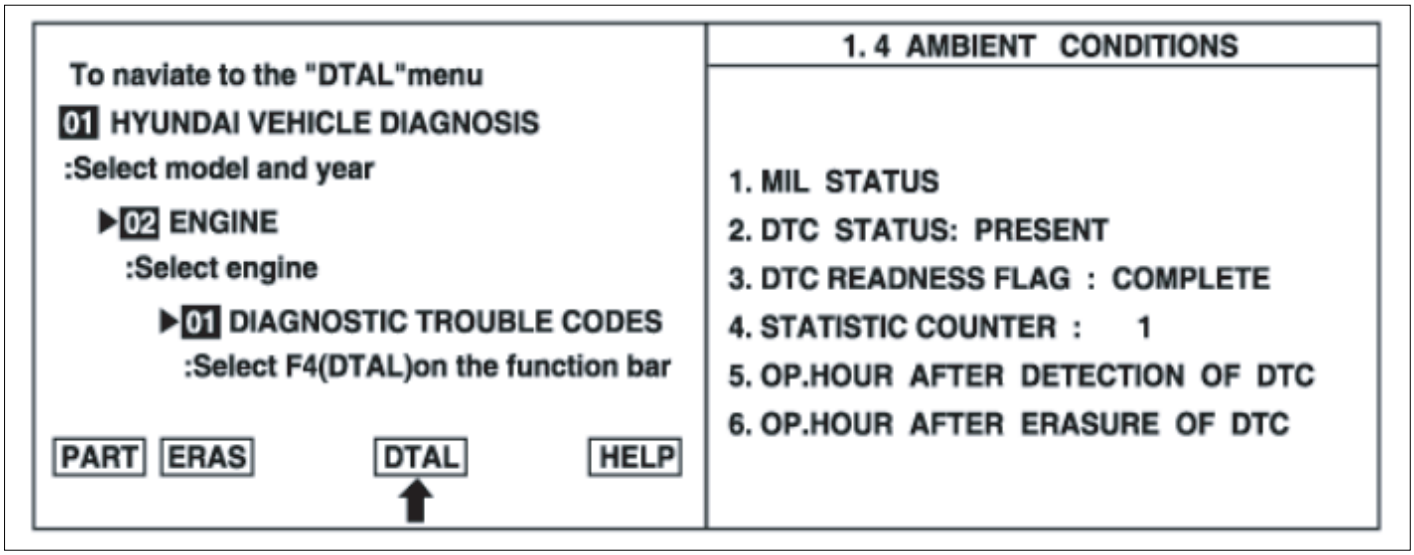

EFRF200D

5. Is parameter displayed "History(Not Present) fault"?

YES

▶ Fault is intermittent caused by poor contact in the sensor's and/or PCM's connector or was repaired and PCM memory was not cleared. Thoroughly check connectors for looseness, poor connection, bending, corrosion, contamination, deterioration, or damage. Repair or replace as necessary and then go to "Verification of Vehicle Repair" procedure.

NO

▶ Go to next step as below.

COMPONENT INSPECTION E1BB6642

1. Timing Inspection

   1) Set up an oscilloscope as follows :
      Channel A (+): terminal 2 of the CKPS, (-): ground
      Channel B (+): terminal 2 of the CMPS, (-): ground

   2) Start the engine and check for signal waveform whether synchronize with camshaft sensor or not and tooth is missing refer to sample waveforms as below

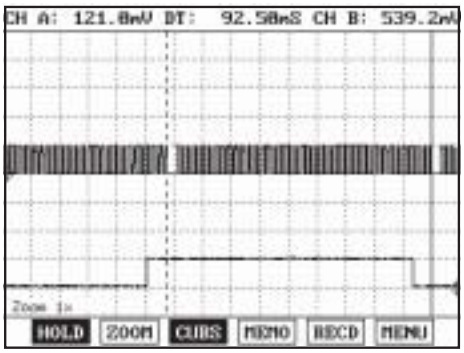

Fig.1

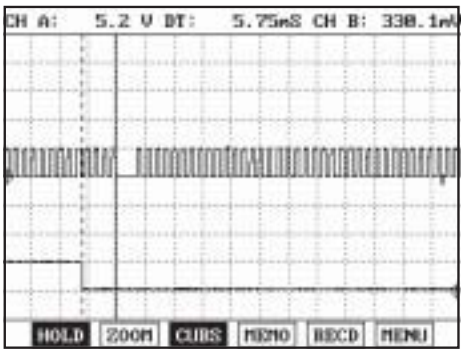

Fig.2

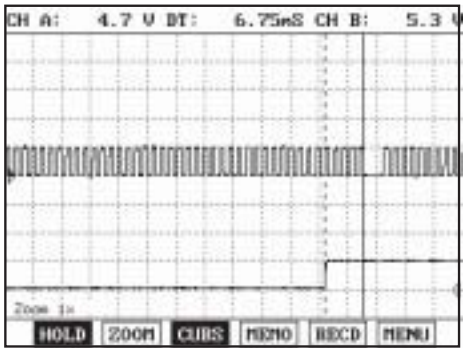

Fig.3

Fig.1) The square wave signal should be smooth and without any distortion.
Fig.2,3)The CMPS falling(rising) edge is coincided with 3~5 tooth of the CKP from one longer signal(missing tooth)

EFRF200N

3) Is the signal waveform normal?

YES

▶ Check for poor connection between PCM and component: backed out terminal, improper mating, broken locks or poor terminal to wire connection. Repair as necessary and go to "Verification of Vehicle Repair" procedure

NO

▶ Check the following items
- Alignment of the timing belt
- Alignment of the camshaft timing chain

Readjust or repair as necessary and go to "Verification of Vehicle Repair" procedure

VERIFICATION OF VEHICLE REPAIR E028FDB2

Refer to DTC P0011.

DTC P0030 HO2S HEATER CONTROL CIRCUIT (BANK 1 / SENSOR 1)

COMPONENT LOCATION E065D891

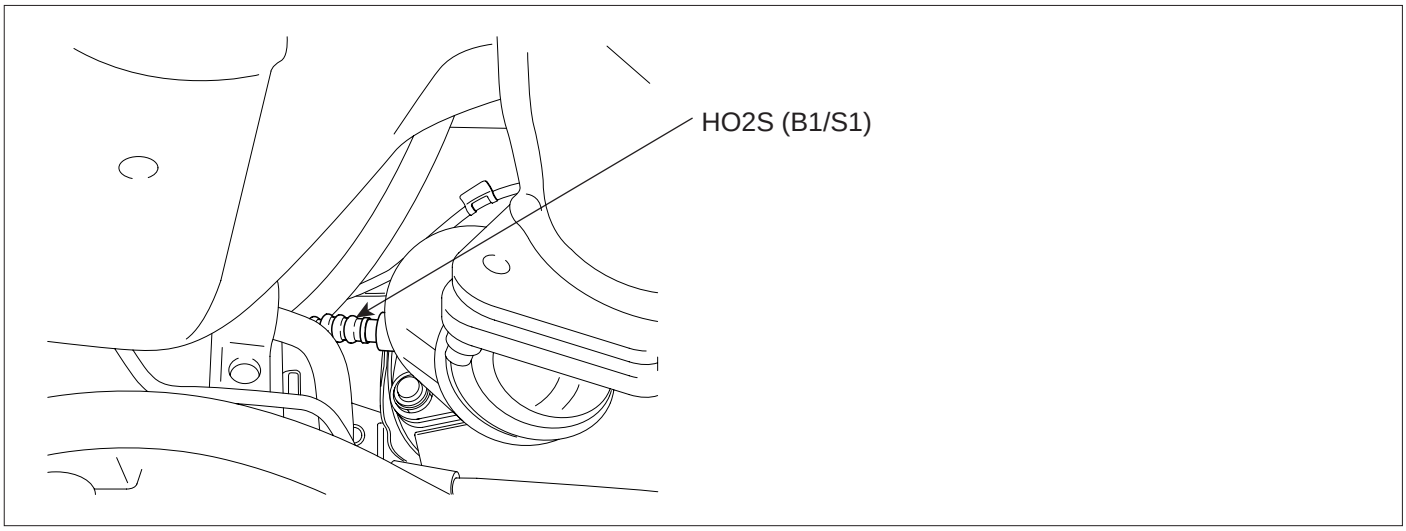

EFRF011A

GENERAL DESCRIPTION E23A9BE2

The normal operating temperature of the HO2S(Heated Oxygen Sensor) ranges from 350 to 850℃(662 to 1562°F). The HO2S heater greatly decreases the amount of time required for fuel control to become active. The ECM provides a pulse width modulated control circuit to adjust current through the heater. When the HO2S is cold, the value of the resistance is low and the current in the circuit is high. On the contrary, if the temperature in the resistor of the sensor rises, the current drops gradually.

DTC DESCRIPTION E9B5561B

The ECM determines if a front HO2S heater fault has occurred and sets DTC P0030 if the front HO2S heater control driver inside the ECM fails, if HO2S is not operational (after an elapse of predetermined time) since engine start, or when the front HO2S tip temperature is out of normal working range.

DTC DETECTING CONDITION EB0C4438

Item	Detecting Condition	Possible Cause
DTC Strategy	• Electrical Check	• Related fuse blown or missing • Heater control circuit open or short • Power supply circuit open or short • Contact resistance in connectors • Faulty HO2S
Enable Conditions	• No relevant failure • Engine running • 11V 〈 Battery voltage 〈16V • 3.5% 〈 Heater control duty • 300℃(572°F) 〈 Calculated exhaust gas temperature	
Threshold Value	• Open in control circuit	
Diagnostic Time	• 10sec.	

SPECIFICATION ED9D564C

Specification : 3.3~4.1Ω at 18~20℃(64~82°F)

SCHEMATIC DIAGRAM ED3DC3BD

[Circuit Diagram]

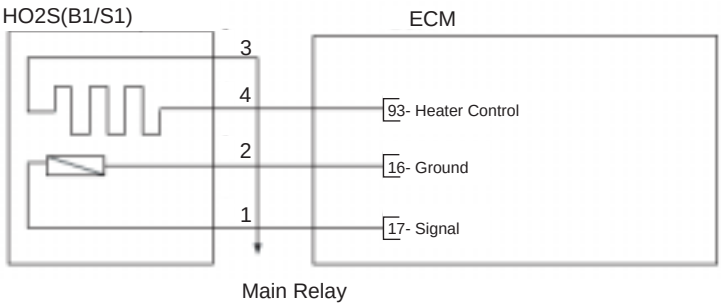

[Connection Information]

Terminal	Connected to	Function
1	ECM Terminal 17	Signal
2	ECM Terminal 16	Ground
3	Main Relay	Power
4	ECM Terminal 93	Heater Control

[Harness Connector]

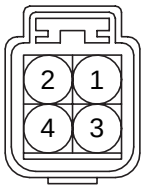

C46

ECM

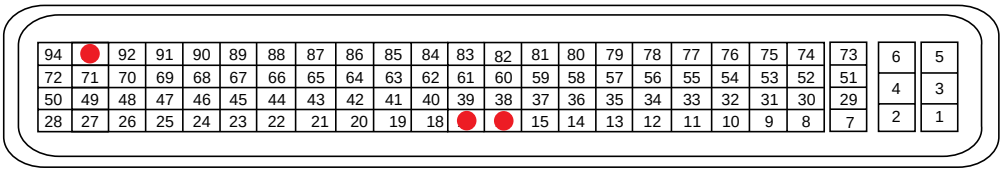

C44

EFRF300B

SIGNAL WAVEFORM AND DATA EBE10F8C

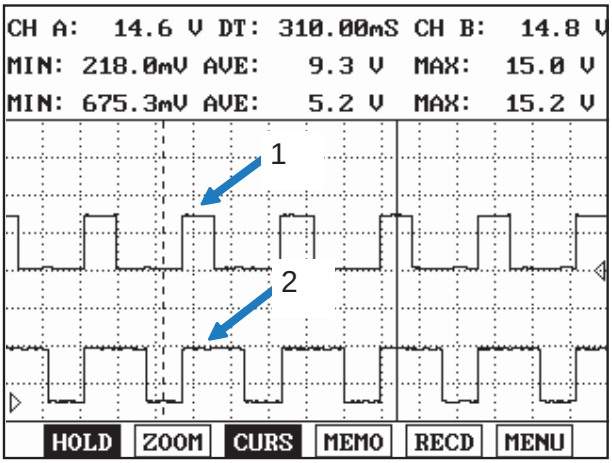

Fig.1

Normal waveform of HO2S heater with idle :
1. Front HO2S heater 2. Rear HO2S heater

EFRF200F

MONITOR DTC STATUS E6DC8238

1. Connect scan tool and select "Diagnostic Trouble Codes(DTCs)" mode.

2. Press F4(DTAL) to select DTC information from the DTCs menu.

3. Confirm that "DTC Readiness Flag" indicates "Complete". If not, drive the vehicle within conditions noted in the freeze frame data or enable conditions.

4. Read "DTC Status" parameter.

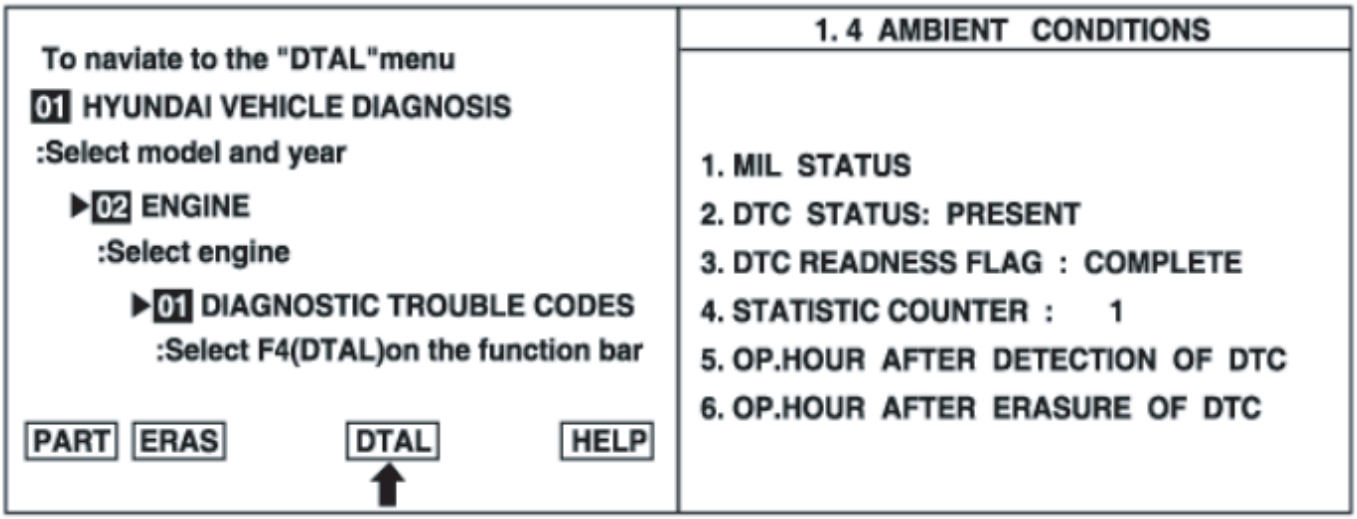

EFRF200D

5. Is parameter displayed "History(Not Present) fault"?

NOTE

- *History (Not Present) fault : DTC occurred but has been cleared.*
- *Present fault : DTC is occurring at present time.*

YES

▶ Fault is intermittent caused by poor contact in the sensor's and/or ECM's connector or was repaired and ECM memory was not cleared. Thoroughly check connectors for looseness, poor connection, bending, corrosion, contamination, deterioration, or damage. Repair or replace as necessary and then go to "Verification of Vehicle Repair" procedure.

NO

▶ Go to next step as below.

TERMINAL AND CONNECTOR INSPECTION E3C9BCE2

1. Many malfunctions in the electrical system are caused by poor harness(es) and terminals. Faults can also be caused by interference from other electrical systems, and mechanical or chemical damage.
2. Thoroughly check connectors for looseness, poor connection, bending, corrosion, contamination, deterioration, or damage.
3. Has a problem been found?

YES

▶ Repair as necessary and go to "Verification of Vehicle Repair" procedure

NO

▶ Go to "Power Supply Circuit Inspection" procedure

POWER CIRCUIT INSPECTION EC22BABA

1. Ignition "OFF"
2. Disconnect HO2S connector
3. Ignition "ON" & Engine "OFF"
4. Measure voltage between terminal 3 of the HO2S heater harness connector and chassis ground.

Specification : B+

5. Is voltage within the specification?

YES

▶ Go to "Control Circuit Inspection" procedure

NO

▶ Check for an open in the power supply circuit between the main relay and the HO2S.
Especially check for "10A Sensor fuse" is installed anFd not blown.
Repair as necessary and go to "Verification of Vehicle Repair" procedure

CONTROL CIRCUIT INSPECTION E86E4694

1. Measure voltage between terminal 4 of the HO2S heater harness connector and chassis ground.

Specification : Approx. 4~5V

2. Is voltage within the specification?

YES

▶ Go to "Component Inspection" procedure

NO

▶ Repair open or short to ground in control circuit and go to "Verification of Vehicle Repair" procedure

COMPONENT INSPECTION EFED1372

1. Measure resistance between terminals 3 and 4 of the sensor connector (Component side).

Specification : 3.3~4.1Ω at 18~20°C(64~82°F)

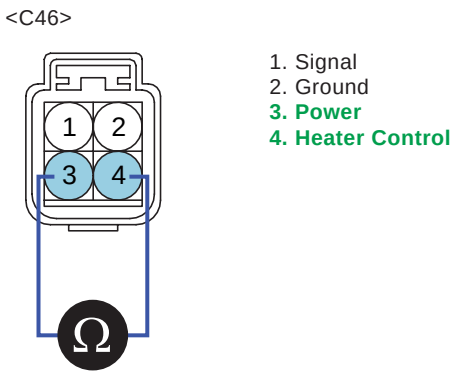

X0306

2. Is resistance within the specification?

YES

▶ Check for poor connection between ECM and component: backed out terminal, improper mating, broken locks or poor terminal to wire connection. Repair as necessary and go to "Verification of Vehicle Repair" procedure

NO

▶ Check HO2S for contamination, deterioration, or damage. Substitute with a known-good HO2S and check for proper operation. If the problem is corrected, replace HO2S and then go to "Verification of Vehicle Repair" procedure

VERIFICATION OF VEHICLE REPAIR EBC21CB0

After a repair, it is essential to verify that the fault has been corrected.

1. Connect scan tool and select "Diagnostic Trouble Codes(DTCs)" mode

2. Press F4(DTAL) and confirm that "DTC Readiness Flag" indicates "Complete". If not, drive the vehicle within conditions noted in the freeze frame data or enable conditions

3. Read "DTC Status" parameter

4. Is parameter displayed "History(Not Present) fault"?

YES

▶ System performing to specification at this time. Clear the DTC

NO

▶ Go to the applicable troubleshooting procedure.

DTC P0031 HO2S HEATER CIRCUIT LOW (BANK 1 / SENSOR 1)

COMPONENT LOCATION ECDFF242

Refer to DTC P0030.

GENERAL DESCRIPTION EECEDF35

Refer to DTC P0030.

DTC DESCRIPTION E7D26EA3

ECM sets DTC P0031 if the ECM detects that the front HO2S heater control circuit is short to ground.

DTC DETECTING CONDITION E6E28A64

Item	Detecting Condition	Possible Cause
DTC Strategy	• Electrical Check	• Related fuse blown or missing • Open or short to ground in power supply or control harness • Contact resistance in connectors • Faulty HO2S
Enable Conditions	• No relevant failure • Engine running • 10V 〈 Battery voltage 〈16V • 97% 〈 Heater control duty	
Threshold Value	• Short to ground	
Diagnostic Time	• 10sec.	

SPECIFICATION E12AFB90

Refer to DTC P0030.

SCHEMATIC DIAGRAM EFE2A0DE

Refer to DTC P0030.

SIGNAL WAVEFORM AND DATA EBDD3BE9

Refer to DTC P0030.

MONITOR DTC STATUS E9EE4FDD

Refer to DTC P0030.

TERMINAL AND CONNECTOR INSPECTION E00CDE52

Refer to DTC P0030.

POWER CIRCUIT INSPECTION EBD2AF0E

1. Ignition "OFF"
2. Disconnect HO2S sensor connector

3. Ignition "ON" & Engine "OFF"

4. Measure voltage between terminal 3 of the HO2S heater harness connector and chassis ground.

Specification : B+

5. Is voltage within the specification?

YES

▶ Go to "Control Circuit Inspection" procedure

NO

▶ Check for an open in the power supply circuit between the main relay and the HO2S.
Especially check for "10A Sensor fuse" is installed and not blown.
Repair as necessary and go to "Verification of Vehicle Repair" procedure

CONTROL CIRCUIT INSPECTION E0D1CE98

1. Measure voltage between terminal 4 of the HO2S heater harness connector and chassis ground.

Specification : Approx. 4~5V

2. Is voltage within the specification?

YES

▶ Go to "Component Inspection" procedure

NO

▶ Repair open or short to ground in control circuit and go to "Verification of Vehicle Repair" procedure

COMPONENT INSPECTION EEC850A0

Refer to DTC P0030.

VERIFICATION OF VEHICLE REPAIR EB29E9E7

Refer to DTC P0030.

DTC P0032 HO2S HEATER CIRCUIT HIGH (BANK 1 / SENSOR 1)

COMPONENT LOCATION EED952B3

Refer to DTC P0030.

GENERAL DESCRIPTION EFDDEB61

Refer to DTC P0030.

DTC DESCRIPTION EFAFD08C

ECM sets DTC P0032 if the ECM detects that the front HO2S heater control line is open or short to battery circuit

DTC DETECTING CONDITION E4C0C9E5

Item		Detecting Condition	Possible Cause
DTC Strategy		• Electrical Check	• Open or short to battery in control harness • Contact resistance in connectors • Faulty HO2S
Enable Condi-tions	Case1	• No relevant failure • Engine running • 10V 〈 Battery voltage 〈16V • 3.5% 〈 Heater PWM • 300℃(572°F) 〈 Modeled exhaust gas temp.	
	Case2	• No relevant failure • Engine running • 10V 〈 Battery voltage 〈16V • 3.5% 〈 Heater PWM 〈96.5%	
Thresh-old Value	Case1	• Short to circuit to battery	
	Case2	• Open load	
Diagnostic Time		• 10sec.	

SPECIFICATION EA815094

Refer to DTC P0030.

SCHEMATIC DIAGRAM EB4F867E

Refer to DTC P0030.

SIGNAL WAVEFORM AND DATA EE1EE4A3

Refer to DTC P0030.

MONITOR DTC STATUS E02EB6E9

Refer to DTC P0030.

TERMINAL AND CONNECTOR INSPECTION EAB3166C

1. Many malfunctions in the electrical system are caused by poor harness(es) and terminals. Faults can also be caused by interference from other electrical systems, and mechanical or chemical damage.
2. Thoroughly check connectors for looseness, poor connection, bending, corrosion, contamination, deterioration, or damage.
3. Has a problem been found?

YES

▶ Repair as necessary and go to "Verification of Vehicle Repair" procedure

NO

▶ Go to "Control Circuit Inspection" procedure

CONTROL CIRCUIT INSPECTION EF4FC23E

1. Measure voltage between terminal 4 of the HO2S heater harness connector and chassis ground.

Specification : Approx. 4~5V

2. Is voltage within the specification?

YES

▶ Go to "Component Inspection" procedure

NO

▶ Repair open or short to ground in control circuit and go to "Verification of Vehicle Repair" procedure

COMPONENT INSPECTION E19CFF0E

Refer to DTC P0030.

VERIFICATION OF VEHICLE REPAIR EBFEBD3D

Refer to DTC P0030.

DTC P0036 HO2S HEATER CONTROL CIRCUIT (BANK 1 / SENSOR 2)

COMPONENT LOCATION E3928B16

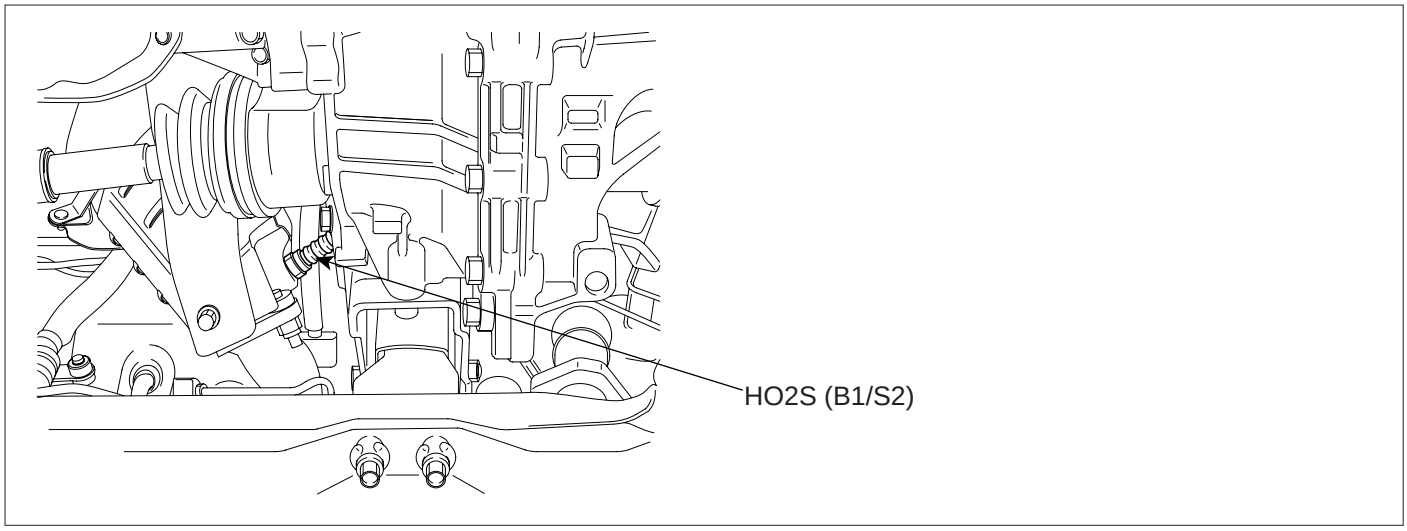

EFRF010A

GENERAL DESCRIPTION E954DAFD

The normal operating temperature of the HO2S(Heated Oxygen Sensor) ranges from 350 to 850℃(662 to 1562°F). The HO2S heater greatly decreases the amount of time required for fuel control to become active. The ECM provides a pulse width modulated control circuit to adjust current through the heater. When the HO2S is cold, the value of the resistance is low and the current in the circuit is high. On the contrary, if the temperature in the resistor of the sensor rises, the current drops gradually.

DTC DESCRIPTION EBA14197

The ECM determines when a rear HO2S heater fault occurs and sets DTC P0036 if measured rear HO2S resistance is lower than the predetermined threshold.

DTC DETECTING CONDITION EACCFDAD

Item	Detecting Condition	Possible Cause
DTC Strategy	• Electrical Check	• Related fuse blown or missing • Heater control circuit open or short • Power supply circuit open or short • Contact resistance in connectors • Faulty HO2S
Enable Conditions	• No relevant failure • Engine running • 11V 〈 Battery voltage 〈16V • 3.5% 〈 Heater control duty • 300℃(572°F) 〈 Calculated exhaust gas temperature	
Threshold Value	• Open in control circuit	
Diagnostic Time	• 10sec.	

SPECIFICATION EDFC84F2

Specification : 3.3~4.1Ω at 18~20℃(64~82°F)

SCHEMATIC DIAGRAM E28DCBD8

[Circuit Diagram]

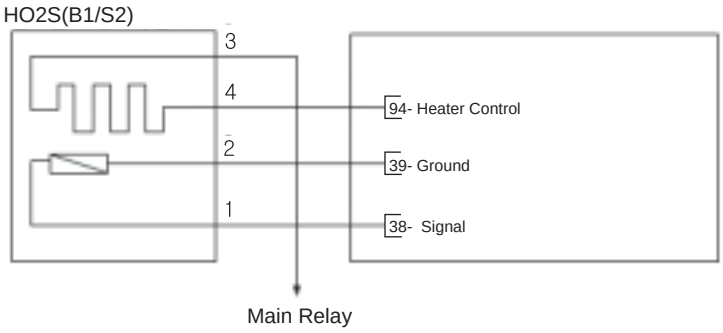

[Connection Information]

Terminal	Connected to	Function
1	ECM Terminal 38	Signal
2	ECM Terminal 39	Ground
3	Main Relay	Power
4	ECM Terminal 94	Heater Control

[Harness Connector]

C47

ECM

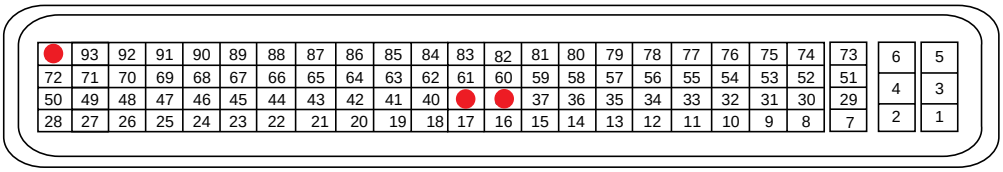

C44

EFRF300C

SIGNAL WAVEFORM AND DATA EBCC5668

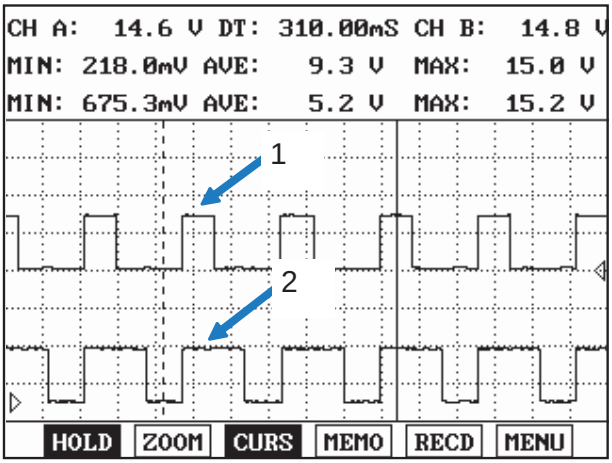

Fig.1

Normal waveform of HO2S heater with idle :
1. Front HO2S heater 2. Rear HO2S heater

EFRF200F

MONITOR DTC STATUS E6040795

1. Connect scan tool and select "Diagnostic Trouble Codes(DTCs)" mode.

2. Press F4(DTAL) to select DTC information from the DTCs menu.

3. Confirm that "DTC Readiness Flag" indicates "Complete". If not, drive the vehicle within conditions noted in the freeze frame data or enable conditions.

4. Read "DTC Status" parameter.

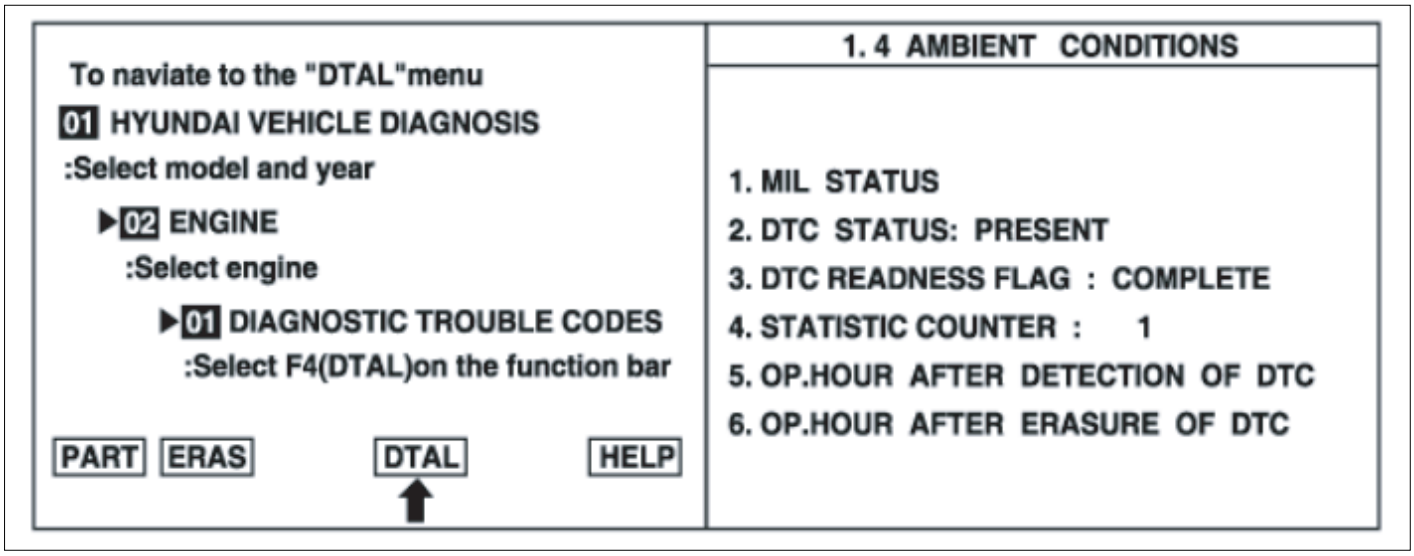

EFRF200D

5. Is parameter displayed "History(Not Present) fault"?

NOTE

- *History (Not Present) fault : DTC occurred but has been cleared.*
- *Present fault : DTC is occurring at present time.*

YES

▶ Fault is intermittent caused by poor contact in the sensor's and/or ECM's connector or was repaired and ECM memory was not cleared. Thoroughly check connectors for looseness, poor connection, bending, corrosion, contamination, deterioration, or damage. Repair or replace as necessary and then go to "Verification of Vehicle Repair" procedure.

NO

▶ Go to next step as below.

TERMINAL AND CONNECTOR INSPECTION E7E36C6C

1. Many malfunctions in the electrical system are caused by poor harness(es) and terminals. Faults can also be caused by interference from other electrical systems, and mechanical or chemical damage.

2. Thoroughly check connectors for looseness, poor connection, bending, corrosion, contamination, deterioration, or damage.

3. Has a problem been found?

YES

▶ Repair as necessary and go to "Verification of Vehicle Repair" procedure

NO

▶ Go to "Power Circuit Inspection" procedure

POWER CIRCUIT INSPECTION E281FDA2

1. Ignition "OFF"

2. Disconnect HO2S sensor connector

3. Ignition "ON" & Engine "OFF"

4. Measure voltage between terminal 3 of the HO2S heater harness connector and chassis ground.

Specification : B+

<

5. Is voltage within the specification?

YES

▶ Go to "Control Circuit Inspection" procedure

NO

▶ Check for an open in the power supply circuit between the main relay and the HO2S.
Especially check for "10A Sensor fuse" is installed and not blown.
Repair as necessary and go to "Verification of Vehicle Repair" procedure.

CONTROL CIRCUIT INSPECTION EB8AAAF6

1. Measure voltage between terminal 4 of the HO2S heater harness connector and chassis ground.

Specification : Approx. 5~8V

2. Is voltage within the specification?

YES

▶ Go to "Component Inspection" procedure

NO

▶ Repair open or short to ground in control circuit and go to "Verification of Vehicle Repair" procedure

COMPONENT INSPECTION ECC9B17F

1. Ignition "OFF"
2. Measure resistance between terminals 3 and 4 of the sensor connector (Component side).

Specification : 3.3~4.1Ω at 18~20℃(64~82°F)

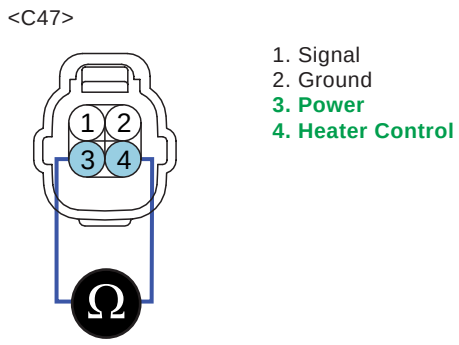

X0366

3. Is resistance within the specification?

YES

▶ Check for poor connection between ECM and component: backed out terminal, improper mating, broken locks or poor terminal to wire connection. Repair as necessary and go to "Verification of Vehicle Repair" procedure

NO

▶ Check HO2S for contamination, deterioration, or damage. Substitute with a known-good HO2S and check for proper operation. If the problem is corrected, replace HO2S and then go to "Verification of Vehicle Repair" procedure

VERIFICATION OF VEHICLE REPAIR E75DEE36

After a repair, it is essential to verify that the fault has been corrected.

1. Connect scan tool and select "Diagnostic Trouble Codes(DTCs)" mode
2. Press F4(DTAL) and confirm that "DTC Readiness Flag" indicates "Complete". If not, drive the vehicle within conditions noted in the freeze frame data or enable conditions
3. Read "DTC Status" parameter
4. Is parameter displayed "History(Not Present) fault"?

YES

▶ System performing to specification at this time. Clear the DTC

NO

▶ Go to the applicable troubleshooting procedure.

DTC P0037 HO2S HEATER CIRCUIT LOW (BANK 1 / SENSOR 2)

COMPONENT LOCATION EF56B6D1

Refer to DTC P0036.

GENERAL DESCRIPTION E73CBE88

Refer to DTC P0036.

DTC DESCRIPTION EDEA9311

ECM sets DTC P0037 if the ECM detects that the rear HO2S heater control line is short to ground.

DTC DETECTING CONDITION E0B0DBEC

Item	Detecting Condition	Possible Cause
DTC Strategy	• Electrical Check	• Related fuse blown or missing • Open or short to ground in power supply or control harness • Contact resistance in connectors • Faulty HO2S
Enable Conditions	• No relevant failure • Engine running • 10V 〈 Battery voltage 〈16V • 97% 〈 Heater control duty	
Threshold Value	• Short to ground	
Diagnostic Time	• 10sec.	

SPECIFICATION EDCDAACD

Refer to DTC P0036.

SCHEMATIC DIAGRAM E91351CF

Refer to DTC P0036.

SIGNAL WAVEFORM AND DATA E1E4ECB2

Refer to DTC P0036.

MONITOR DTC STATUS EAD9584B

Refer to DTC P0036.

TERMINAL AND CONNECTOR INSPECTION E3B40DBC

Refer to DTC P0036.

POWER CIRCUIT INSPECTION E427EBBE

1. Ignition "OFF"
2. Disconnect HO2S sensor connector

3. Ignition "ON" & Engine "OFF"

4. Measure voltage between terminal 3 of the HO2S heater harness connector and chassis ground.

Specification : B+

5. Is voltage within the specification?

YES

▶ Go to "Control Circuit Inspection" procedure

NO

▶ Check for an open in the power supply circuit between the main relay and the HO2S.
Especially check for "10A Sensor fuse" is installed and not blown.
Repair as necessary and go to "Verification of Vehicle Repair" procedure.

CONTROL CIRCUIT INSPECTION EACDECA1

1. Measure voltage between terminal 4 of the HO2S heater harness connector and chassis ground.

Specification : Approx. 5~8V

2. Is voltage within the specification?

YES

▶ Go to "Component Inspection" procedure

NO

▶ Repair open or short to ground in control circuit and go to "Verification of Vehicle Repair" procedure

COMPONENT INSPECTION EFF6A9D8

Refer to DTC P0036.

VERIFICATION OF VEHICLE REPAIR ED345BBD

Refer to DTC P0036.

DTC P0038 HO2S HEATER CIRCUIT HIGH (BANK 1 / SENSOR 2)

COMPONENT LOCATION ED2D0DE3

Refer to DTC P0036.

GENERAL DESCRIPTION E0189A8D

Refer to DTC P0036.

DTC DESCRIPTION E16B3398

ECM sets DTC P0038 if the ECM detects that the rear HO2S heater control line is open or short to battery line.

DTC DETECTING CONDITION ECCB635D

Item		Detecting Condition	Possible Cause
DTC Strategy		• Electrical Check	• Open or short to battery in control harness • Contact resistance in connectors • Faulty HO2S
Enable Condi-tions	Case1	• No relevant failure • Engine running • 10V 〈 Battery voltage 〈16V • 3.5% 〈 Heater PWM • 300℃(572°F) 〈 Modeled exhaust gas temp.	
	Case2	• No relevant failure • Engine running • 10V 〈 Battery voltage 〈16V • 3.5% 〈 Heater PWM 〈96.5%	
Thresh-old Value	Case1	• Short to circuit to battery	
	Case2	• Open load	
Diagnostic Time		• 10sec.	

SPECIFICATION EB1EF1B1

Refer to DTC P0036.

SCHEMATIC DIAGRAM EC3B36C0

Refer to DTC P0036.

SIGNAL WAVEFORM AND DATA E4F9FAC1

Refer to DTC P0036.

MONITOR DTC STATUS E8FEB94A

Refer to DTC P0036.

TERMINAL AND CONNECTOR INSPECTION EB950CE3

1. Many malfunctions in the electrical system are caused by poor harness(es) and terminals. Faults can also be caused by interference from other electrical systems, and mechanical or chemical damage.
2. Thoroughly check connectors for looseness, poor connection, bending, corrosion, contamination, deterioration, or damage.
3. Has a problem been found?

YES

▶ Repair as necessary and go to "Verification of Vehicle Repair" procedure

NO

▶ Go to "Control Circuit Inspection" procedure

CONTROL CIRCUIT INSPECTION EBE1B81E

1. Measure voltage between terminal 4 of the HO2S heater harness connector and chassis ground.

Specification : Approx. 5~8V

2. Is voltage within the specification?

YES

▶ Go to "Component Inspection" procedure

NO

▶ Repair open or short to ground in control circuit and go to "Verification of Vehicle Repair" procedure

COMPONENT INSPECTION EE3AF2CB

Refer to DTC P0036.

VERIFICATION OF VEHICLE REPAIR E7BDD8E1

Refer to DTC P0036.

DTC P0076 INTAKE VALVE CONTROL SOLENOID CIRCUIT LOW (BANK 1)

COMPONENT LOCATION E060B9B3

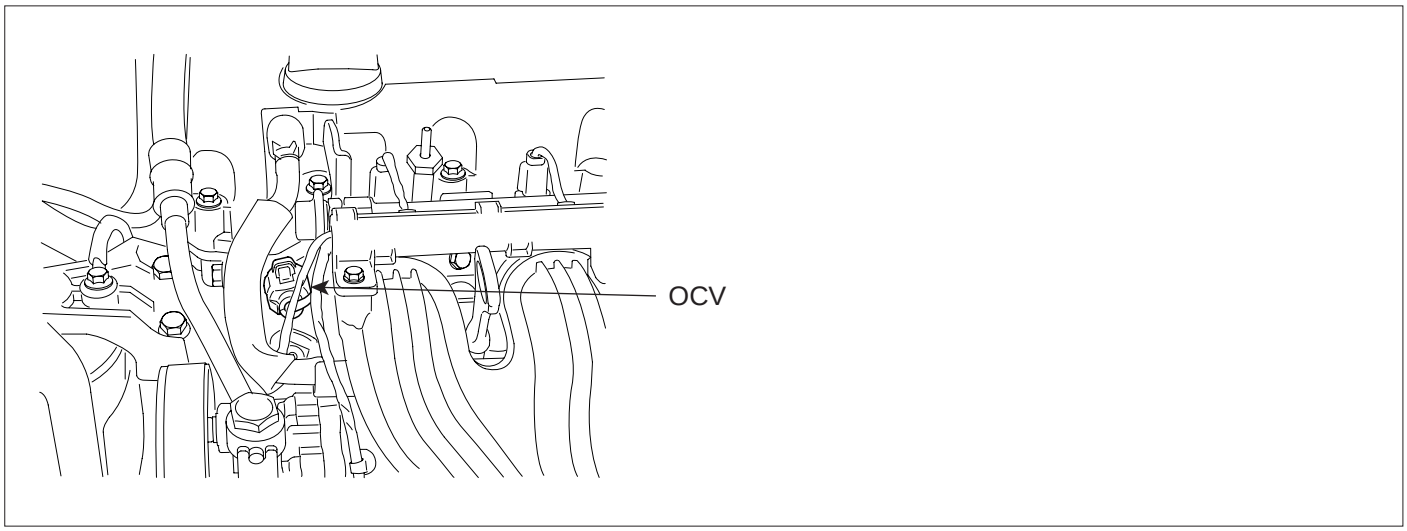

EFRF021A

GENERAL DESCRIPTION ED05F910

The CVVT (Continuously Variable Valve Timing) system built on the camshaft helps the engine decrease the exhaust gas and increase engine power and fuel economy by changing the valve open/close timing of the intake camshaft continuously. The intake valve control solenoid, the main control part of the CVVT, changes the direction of the oil path through the CVVT by the duty control of the ECM and changes the open and close timing of the intake and exhaust valves.

DTC DESCRIPTION EC06BCB1

ECM sets DTC P0076 if the ECM detects that the intake valve control solenoid control circuit is short to ground.

DTC DETECTING CONDITION EAF5ED7F

Item	Detecting Condition	Possible Cause
DTC Strategy	• Electrical Check	• Short to ground in control circuit • Contact resistance in connectors • Faulty Intake Valve Control Solenoid
Enable Conditions	• Solenoid valve energization enabled • 10V 〈 Battery voltage 〈 16V	
Threshold Value	• Short to ground or open circuit	
Diagnostic Time	• 2sec.	

SPECIFICATION E4B5E1DF

Oil Control Valve	Normal Parameter At 20℃ (68℉)
Insulation Resistance	Above 50MΩ

Temp.(℃)	Temp.(℉)	Resistance (Ω)	Temp.(℃)	Temp.(℉)	Resistance (Ω)
0	32	6.2 ~ 7.4	60	140	8.0 ~ 9.2
10	50	6.5 ~ 7.7	70	158	8.3 ~ 9.5
20	68	6.8 ~ 8.0	80	176	8.6 ~ 9.8
30	86	7.1 ~ 8.3	90	194	8.9 ~ 10.1
40	104	7.4 ~ 8.6	100	212	9.2 ~ 10.4
50	122	7.7 ~ 8.9			

SCHEMATIC DIAGRAM E576D45C

[Circuit Diagram]

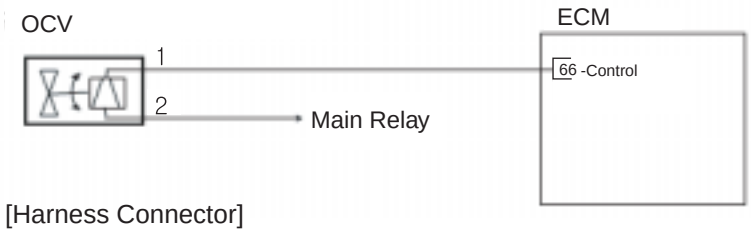

[Connection Information]

Terminal	Connected to	Funtion
1	ECM Terminal 66	Control
2	Main Relay	Power

[Harness Connector]

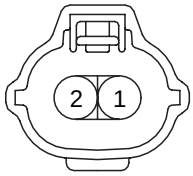

C25

ECM

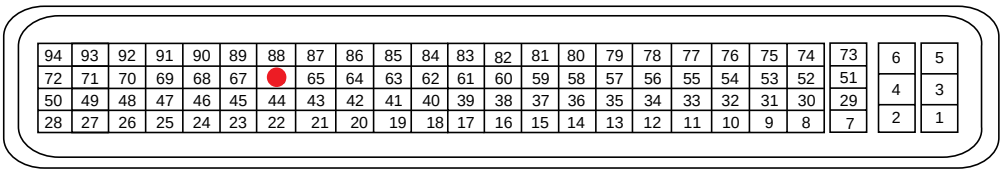

C44

EFRF300A

SIGNAL WAVEFORM AND DATA EC8B8FB7

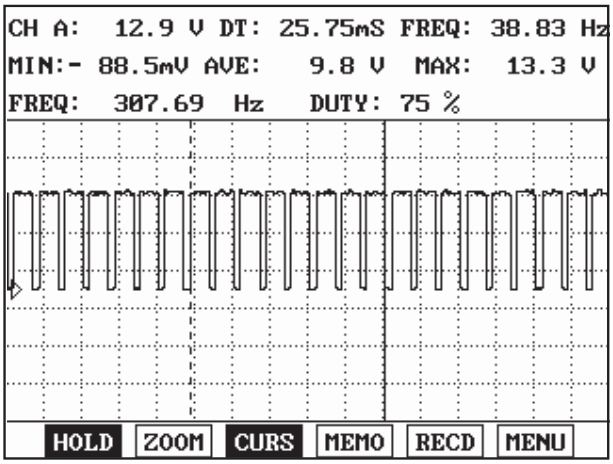

Fig.1

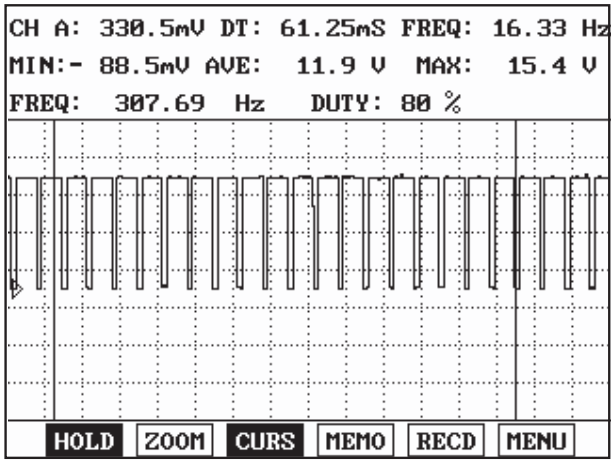

Fig.2

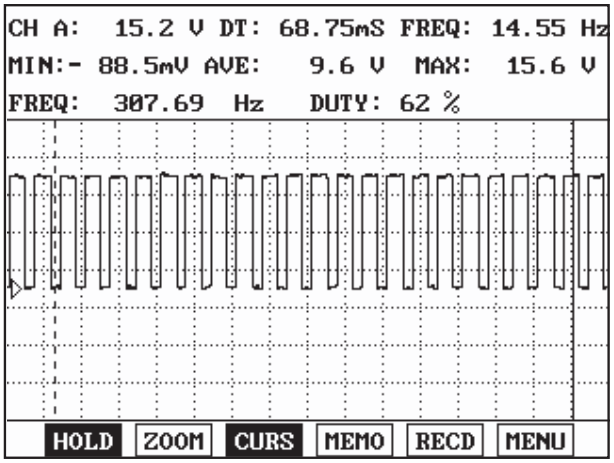

Fig.3

Fig 1) Normal OCV waveform with ignition "ON"
Fig 2) Normal OCV duty ratio with idling : Approx. 12~20%
Fig 3) Normal OCV duty ration with maintaining 3000RPM : Approx. 30~60%

EFRF200A

MONITOR DTC STATUS EAAC18ED

1. Connect scan tool and select "Diagnostic Trouble Codes(DTCs)" mode.
2. Press F4(DTAL) to select DTC information from the DTCs menu.
3. Confirm that "DTC Readiness Flag" indicates "Complete". If not, drive the vehicle within conditions noted in the freeze frame data or enable conditions.
4. Read "DTC Status" parameter.

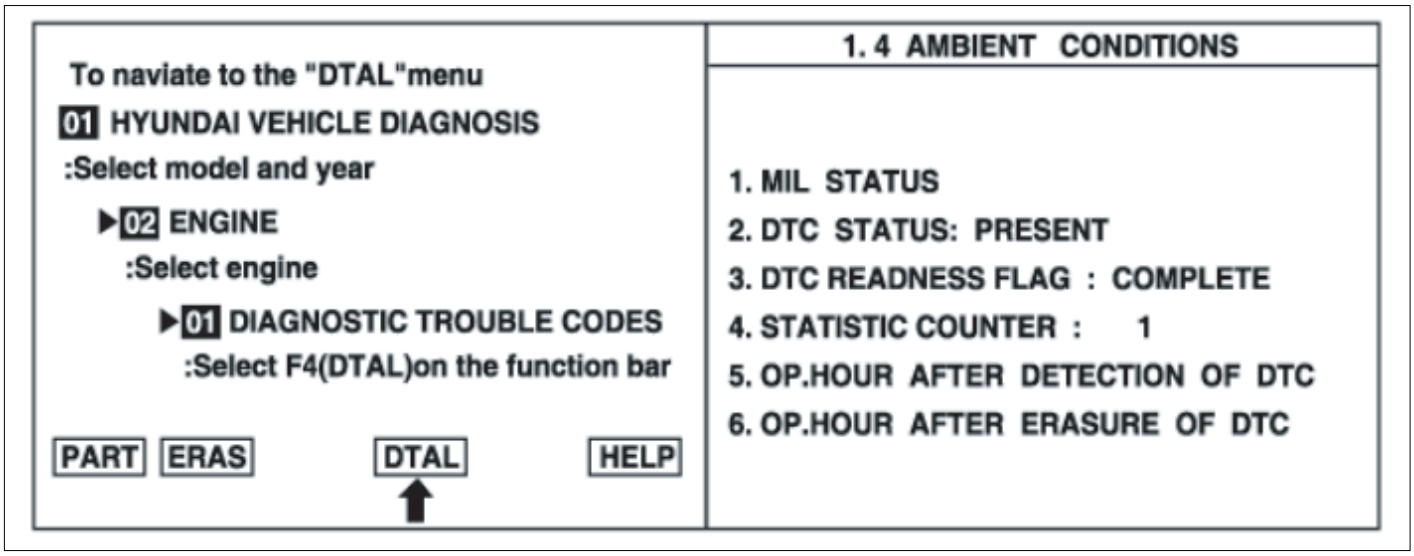

EFRF200D

5. Is parameter displayed "History(Not Present) fault"?

NOTE

- *History (Not Present) fault : DTC occurred but has been cleared.*
- *Present fault : DTC is occurring at present time.*

YES

▶ Fault is intermittent caused by poor contact in the sensor's and/or ECM's connector or was repaired and ECM memory was not cleared. Thoroughly check connectors for looseness, poor connection, bending, corrosion, contamination, deterioration, or damage. Repair or replace as necessary and then go to "Verification of Vehicle Repair" procedure.

NO

▶ Go to next step as below.

COMPONENT INSPECTION EF582E97

1. Ignition "OFF"

2. Disconnect oil control valve connector

3. Measure resistance between terminals 1 and 2 of the solenoid connector(Component side).

SPECIFICATION

Temp.(℃)	Temp.(℉)	Resistance (Ω)	Temp.(℃)	Temp.(℉)	Resistance (Ω)
0	32	6.2 ~ 7.4	60	140	8.0 ~ 9.2
10	50	6.5 ~ 7.7	70	158	8.3 ~ 9.5
20	68	6.8 ~ 8.0	80	176	8.6 ~ 9.8
30	86	7.1 ~ 8.3	90	194	8.9 ~ 10.1
40	104	7.4 ~ 8.6	100	212	9.2 ~ 10.4
50	122	7.7 ~ 8.9			

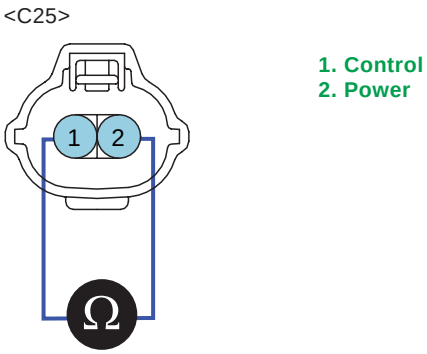

4. Is resistance within specification?

YES

▶ Go to next step as below

NO

▶ Check oil control valve for contamination, deterioration, or damage. Substitute with a known-good solenoid and check for proper operation. If the problem is corrected, replace solenoid and then go to "Verification of Vehicle Repair" procedure

POWER CIRCUIT INSPECTION ED82A831

1. Ignition "ON" & Engine "OFF"
2. Measure voltage between terminal 2 of the oil control valve harness connector and chassis ground.

Specification : Approx. B+

3. Is voltage within specification?

YES

▶ Go to "Control Circuit Inspection" procedure.

NO

▶ Repair open or short to ground in the power supply circuit and go to "Verification of Vehicle Repair" procedure

CONTROL CIRCUIT INSPECTION E62D2B74

1. Measure voltage between terminal 1 of the oil control valve harness connector and chassis ground.

Specification : Approx. 3~4V

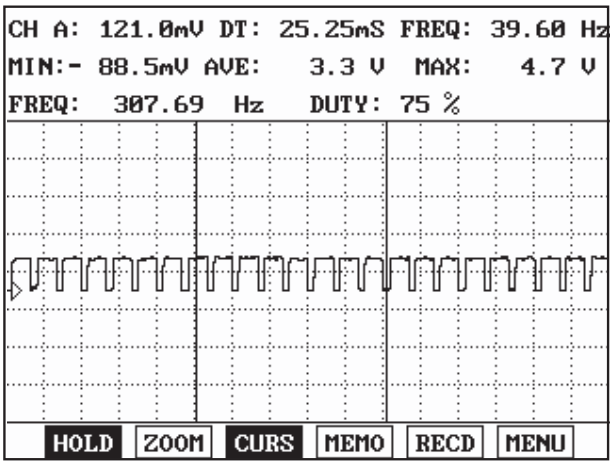

EFRF901A

2. Is voltage within specification?

YES

▶ Go to "Terminal and Connector Inspection" procedure.

NO

▶ Repair short to ground in control circuit and go to "Verification of Vehicle Repair" procedure.

TERMINAL AND CONNECTOR INSPECTION E1A1DA0D

1. Many malfunctions in the electrical system are caused by poor harness(es) and terminals. Faults can also be caused by interference from other electrical systems, and mechanical or chemical damage.
2. Thoroughly check connectors for looseness, poor connection, bending, corrosion, contamination, deterioration, or damage.
3. Has a problem been found?

YES

▶ Repair as necessary and go to "Verification of Vehicle Repair" procedure

NO

▶ Check for poor connection between ECM and component: backed out terminal, improper mating, broken locks or poor terminal to wire connection. Repair as necessary and go to "Verification of Vehicle Repair" procedure

VERIFICATION OF VEHICLE REPAIR EDADF8CA

After a repair, it is essential to verify that the fault has been corrected.

1. Connect scan tool and select "Diagnostic Trouble Codes(DTCs)" mode
2. Press F4(DTAL) and confirm that "DTC Readiness Flag" indicates "Complete". If not, drive the vehicle within conditions noted in the freeze frame data or enable conditions
3. Read "DTC Status" parameter
4. Is parameter displayed "History(Not Present) fault"?

YES

▶ System performing to specification at this time. Clear the DTC

NO

▶ Go to the applicable troubleshooting procedure.

DTC P0077 INTAKE VALVE CONTROL SOLENOID CIRCUIT HIGH (BANK 1)

COMPONENT LOCATION ECE2FB2E

Refer to DTC P0076.

GENERAL DESCRIPTION EA9E7AFA

Refer to DTC P0076.

DTC DESCRIPTION ED25FACD

ECM sets DTC P0077 if the ECM detects that the OCV control circuit is open or short to battery

DTC DETECTING CONDITION EE53C408

Item	Detecting Condition	Possible Cause
DTC Strategy	• Electrical Check	• Open or short to battery in control circuit • Contact resistance in connectors • Faulty Intake Valve Control Solenoid
Enable Conditions	• Solenoid valve energization enabled • 10V 〈 Battery voltage 〈 16V	
Threshold Value	• Short to battery	
Diagnostic Time	• 2sec.	

SPECIFICATION ECDE5F3B

Refer to DTC P0076.

SCHEMATIC DIAGRAM ED89F6E3

Refer to DTC P0076.

SIGNAL WAVEFORM AND DATA E3FF191D

Refer to DTC P0076.

MONITOR DTC STATUS E81A4A0E

Refer to DTC P0076.

COMPONENT INSPECTION E64B21E6

Refer to DTC P0076.

CONTROL CIRCUIT INSPECTION E3801A6B

1. Measure voltage between terminal 1 of the oil control valve harness connector and chassis ground.

Specification : Approx. 3~4V

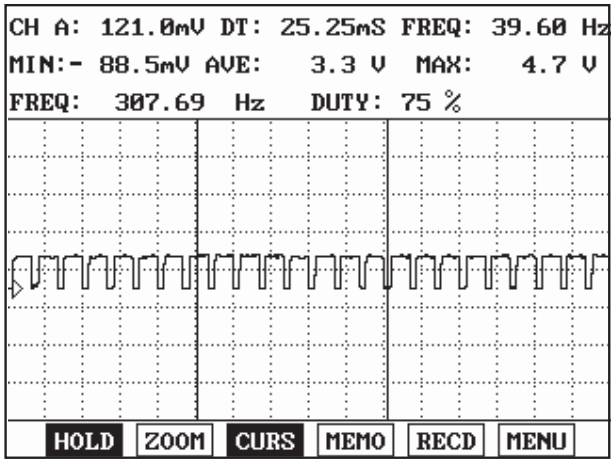

EFRF901A

2. Is voltage within specification?

YES

▶ Go to "Terminal and Connector Inspection" procedure.

NO

▶ Repair short to ground in control circuit and go to "Verification of Vehicle Repair" procedure.

TERMINAL AND CONNECTOR INSPECTION EFCB0187

Refer to DTC P0076.

VERIFICATION OF VEHICLE REPAIR E9EADACC

Refer to DTC P0076.

DTC P0101 MASS OR VOLUME AIR FLOW CIRCUIT RANGE/PERFORMANCE

COMPONENT LOCATION EDFFED2A

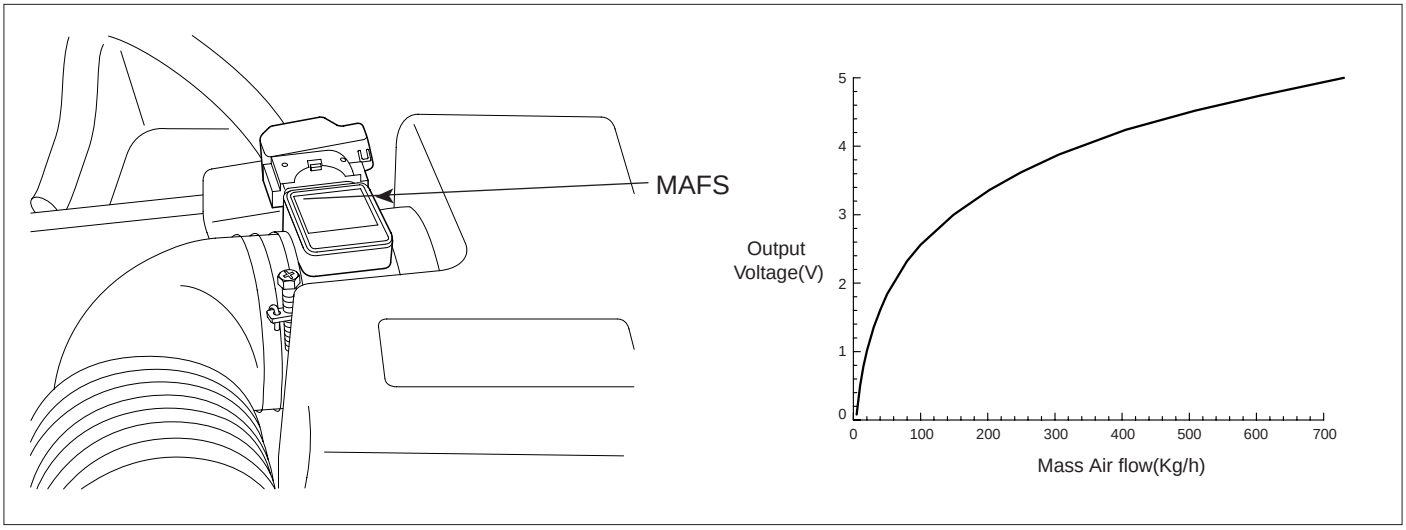

EFRF016C

GENERAL DESCRIPTION EEA3EFA2

The Mass Air Flow Sensor (MAFS) is located between the air cleaner assembly and the throttle body. The MAFS uses a hot film type sensing element to measure the mass of intake air entering the engine. This hot film type air flow sensor consists of a hot film sensor, housing and metering ducts. Mass air flow rate is measured by detection of heat transfer from a hot film probe. The change in air flow rate causes change in the amount of heat being transferred from the hot film probe surface to the air. A large amount of intake air represents acceleration or high load conditions while a small amount of intake air represents deceleration or idle. The mass of intake air should increase at acceleration and be stable during constant engine speed. The ECM uses this information to determine the injection duration and ignition timing for the desired air/fuel ratio.

DTC DESCRIPTION EAA33D1B

The ECM compares the actual measured Mass Air Flow signal to the modeled Mass Air Flow value and sets the DTC P0101 when the difference between these two value is too high or too low with lambda deviation in opposite direction. The ECM illuminates the MIL on the second consecutive driving cycle that the diagnostic runs and fails.
The modeled Mass Air Flow value is determined by engine speed, throttle angle and ISCA duty.

DTC DETECTING CONDITION E0AADF31

Item		Detecting Condition	Possible Cause
Faulty Intake Valve Control Solenoid		• Plausibility check	• Dirty air cleaner. • Oil Cap or Dipstick missing or not installed correctly. • Air leak in intake system • Contact resistance in connectors. • Faulty MAFS or TPS
Enable Conditions		• Engine running • No relevant failure • 608 〈 Engine speed(RPM) 〈 3448 • 0.3 〈 Intake manifold pressure/Ambient pressure 〈1.0 • -0.501hPa/ms 〈 Intake manifold pressure 〈 0.501hPa/ms	
Thresh-old Value	Case1	• Additive adaptation moving mean value of the reduced area out of range	
	Case2	• Multiplicative adaptation moving mean value of the reduced area out of range	
	Case3	• Filtered reduced area controller out of range	
	Case4	• Filtered pressure controller out of range	
Diagnostic Time		• 5sec.	

SPECIFICATION EF3FEFAE

Test Condition	MAF(V)	MAF(Kg/h)	TPS(V)
Idle	1.0~1.3	10~11	0.2 ~ 0.8
Idle & A/C On	1.2~1.4	15~18	-
W.O.T	-		4.3 ~ 4.8

SCHEMATIC DIAGRAM EDCC58AC

[Circuit Diagram]

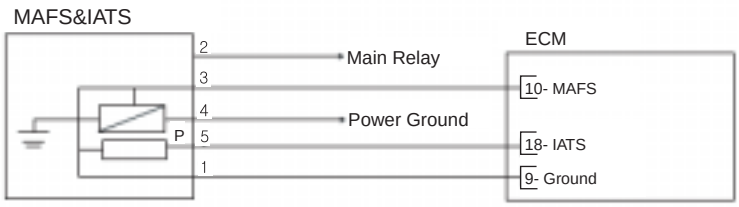

[Connection Information]

Terminal	Connected to	Function
1	ECM Terminal 9	Sensor Ground
2	Main Relay	Power
3	ECM Terminal 10	MAFS
4	Power Ground	Power Ground
5	ECM Terminal 18	IATS

[Harness Connector]

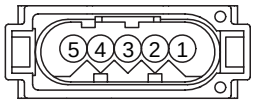

C30

ECM

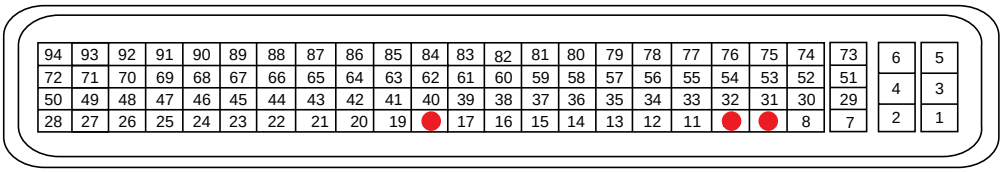

C44

EFRF300D

SIGNAL WAVEFORM AND DATA EE4B9106

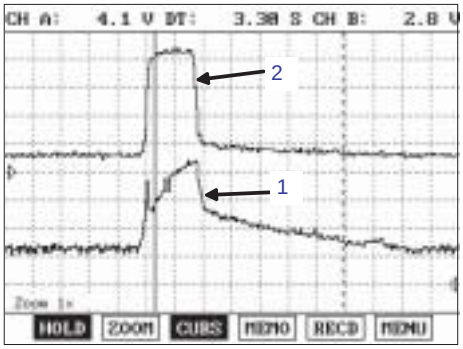

Fig.1

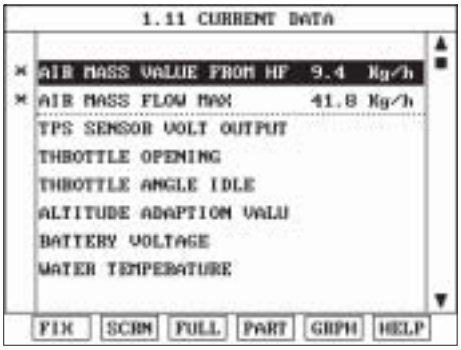

Fig.2

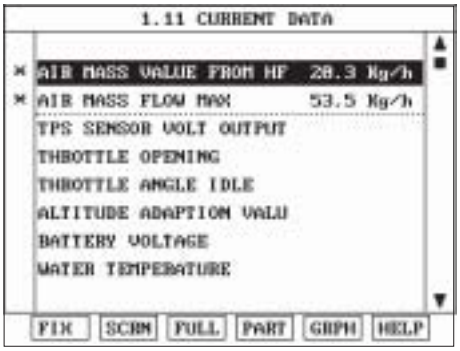

Fig.3

1 : MAF Sensor 2 : TPS

Fig.1) Normal value with accelerating and decelerating : The MAFS and TPS signals increase at the same time with accelerating and decrease with releasing accelerator pedal

Fig.2) Normal value with idle after warm up : Approx.7~12kg/h

Fig.3) Normal value with idle after warm up and A/C "ON" : Signal increases proportionally with engine load (Approx.15~25kg/h)

EFRF200G

MONITOR DTC STATUS EC1B05BB

NOTE

If any codes relating to TPS or MAFS are stored, do ALL REPAIRS associated with those codes before proceeding with further troubleshooting

1. Connect scan tool and select "Diagnostic Trouble Codes(DTCs)" mode.

2. Press F4(DTAL) to select DTC information from the DTCs menu.

3. Confirm that "DTC Readiness Flag" indicates "Complete". If not, drive the vehicle within conditions noted in the freeze frame data or enable conditions.

4. Read "DTC Status" parameter.

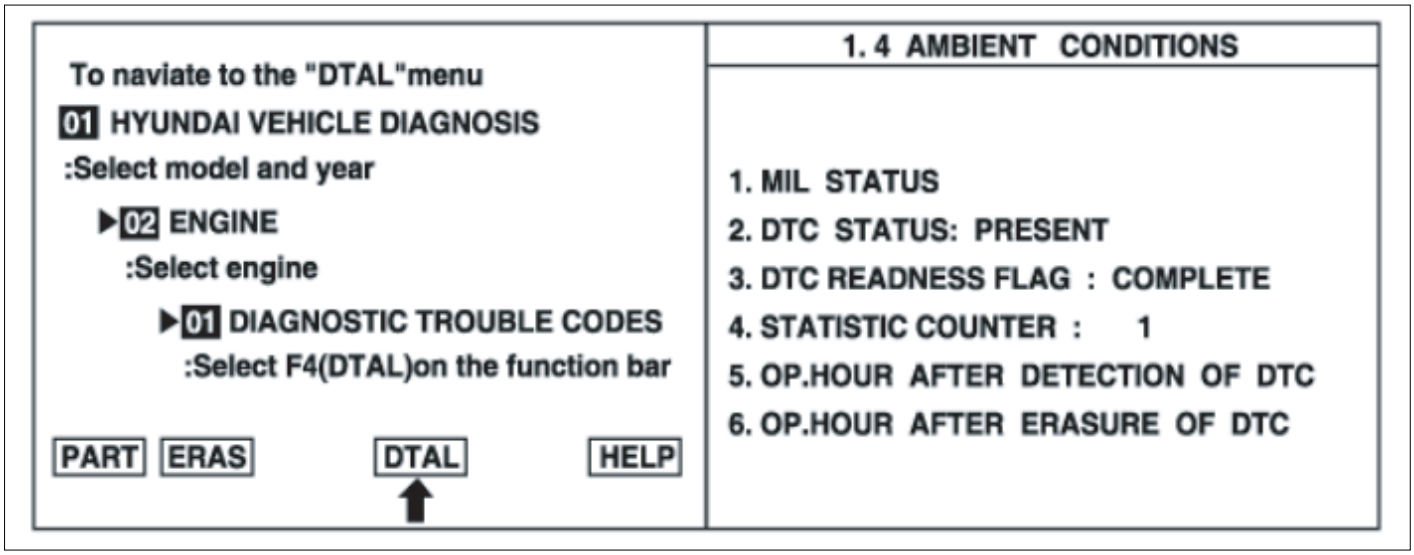

EFRF200D

5. Is parameter displayed "History(Not Present) fault"?

NOTE

- *History (Not Present) fault : DTC occurred but has been cleared.*
- *Present fault : DTC is occurring at present time.*

YES

▶ Fault is intermittent caused by poor contact in the sensor's and/or ECM's connector or was repaired and ECM memory was not cleared. Thoroughly check connectors for looseness, poor connection, bending, corrosion, contamination, deterioration, or damage. Repair or replace as necessary and then go to "Verification of Vehicle Repair" procedure.

NO

▶ Go to next step as below.

AIR CLEANER INSPECTION

1. Check air cleaner condition. Is air cleaner clogged with dirt?

YES

▶ Replace air cleaner and go to "Verification of Vehicle Repair" procedure .

NO

▶ Go to "Air Leakage Inspection" procedure

AIR LEAKAGE INSPECTION EEF48CE4

1. Check intake tube, breather hose and MAFS for source of any air leaks. Are there any cracks in intake tube, MAFS or breather hose
2. Verify oil cap and dipstick are properly installed and oil cap screwed on completely.
3. Has a problem been found?

YES

▶ Repair or Replace as necessary and go to "Verification of Vehicle Repair" procedure .

NO

▶ Go to "TPS Inspection" procedure

TPS INSPECTION

1. Ignition "ON" & Engine "OFF"
2. Install Scantool and monitor the "THROTTLE P.SENSOR(V)" parameter on the Scantool data list.

Specification : Approx. 0.25~0.80V(Closed throttle Valve) / Approx 4.3~4.8V(Wide Open Throttle)

3. Is "THROTTLE P.SENSOR(V)" within specification?

YES

▶ Go to "Terminal and Connector Inspection" procedure

NO

▶ Inspect TP sensor and W/harness and repair or replace as necessary. Go to "Verification of Vehicle Repair" procedure

TERMINAL AND CONNECTOR INSPECTION EBEDA9C5

1. Many malfunctions in the electrical system are caused by poor harness(es) and terminals. Faults can also be caused by interference from other electrical systems, and mechanical or chemical damage.
2. Thoroughly check connectors for looseness, poor connection, bending, corrosion, contamination, deterioration, or damage.
3. Has a problem been found?

YES

▶ Repair as necessary and go to "Verification of Vehicle Repair" procedure

NO

▶ Go to "Component Inspection" procedure

COMPONENT INSPECTION ED125E02

1. Engine "ON"

2. Install Scantool and monitor the "MASS AIR FLOW" parameter on the Scantool data list.

Specification : Normal value with idle after warm up : 7~12 Kg/h Normal value with idle and A/C "ON" after warm up : 15~25 Kg/h

3. Is MAF sensor data near the specified value?

YES

▶ Check for poor connection between ECM and component: backed out terminal, improper mating, broken locks or poor terminal to wire connection. Repair as necessary and go to "Verification of Vehicle Repair" procedure

NO

▶ Check MAF for contamination, deterioration, or damage. Substitute with a known-good MAF and check for proper operation. If the problem is corrected, replace MAF and then go to "Verification of Vehicle Repair" procedure

VERIFICATION OF VEHICLE REPAIR E1BC73EE

After a repair, it is essential to verify that the fault has been corrected.

1. Connect scan tool and select "Diagnostic Trouble Codes(DTCs)" mode
2. Press F4(DTAL) and confirm that "DTC Readiness Flag" indicates "Complete". If not, drive the vehicle within conditions noted in the freeze frame data or enable conditions
3. Read "DTC Status" parameter
4. Is parameter displayed "History(Not Present) fault"?

YES

▶ System performing to specification at this time. Clear the DTC

NO

▶ Go to the applicable troubleshooting procedure.

DTC P0102 MASS OR VOLUME AIR FLOW CIRCUIT LOW INPUT

COMPONENT LOCATION E6E1013B

Refer to DTC P0101.

GENERAL DESCRIPTION E2ED31B5

Refer to DTC P0101.

DTC DESCRIPTION EE3DF1EB

ECM sets DTC P0102 if the ECM detects signal voltage lower than the possible range of a properly operating MAF sensor.

DTC DETECTING CONDITION EFEC377A

Item	Detecting Condition	Possible Cause
DTC Strategy	• Electrical Check	• Open or short to ground in signal circuit • Open in power supply circuit • Contact resistance in connections • Faulty MAF sensor
Enable Conditions	• 10V 〈 Battery voltage 〈16V • Fuel pump activated • Driving cycle recognized • No power latch phase • Time after start 〉 0.5sec • No fuel cut off • Engine speed〉 544rpm • Throttle opening 〉 0.0°	
Threshold Value	• MAF sensor voltage 〈 0.07V	
Diagnostic Time	• 0.2sec.	

SPECIFICATION E15BB7D3

Refer to DTC P0101.

SCHEMATIC DIAGRAM E88AFCBD

Refer to DTC P0101.

SIGNAL WAVEFORM AND DATA ECBF5F6F

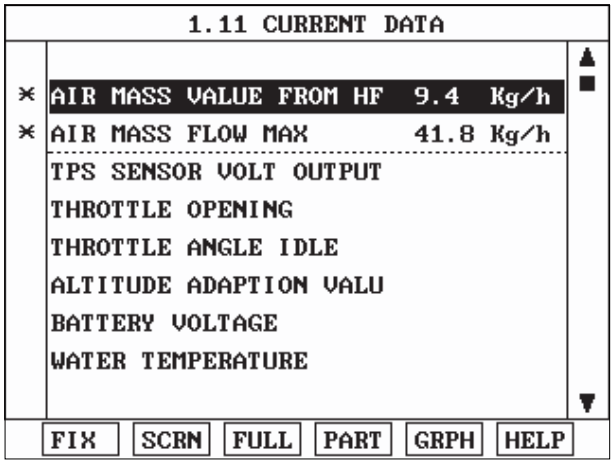

Fig.1

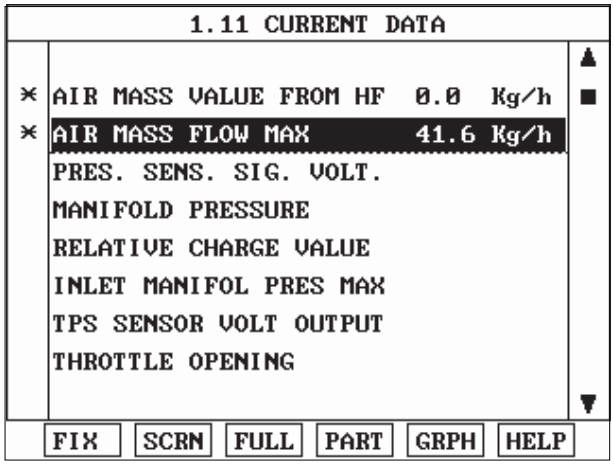

Fig.2

Fig. 1) Normal value with idle after warm up: Approx. 7~12kg/h
Fig. 2) Idle & Open in power, signal circuit or short to ground in signal circuit: Approx. 0kg/h

EFRF200H

MONITOR DTC STATUS ECF8AA31

1. Connect scan tool and select "Diagnostic Trouble Codes(DTCs)" mode.
2. Press F4(DTAL) to select DTC information from the DTCs menu.
3. Confirm that "DTC Readiness Flag" indicates "Complete". If not, drive the vehicle within conditions noted in the freeze frame data or enable conditions.
4. Read "DTC Status" parameter.

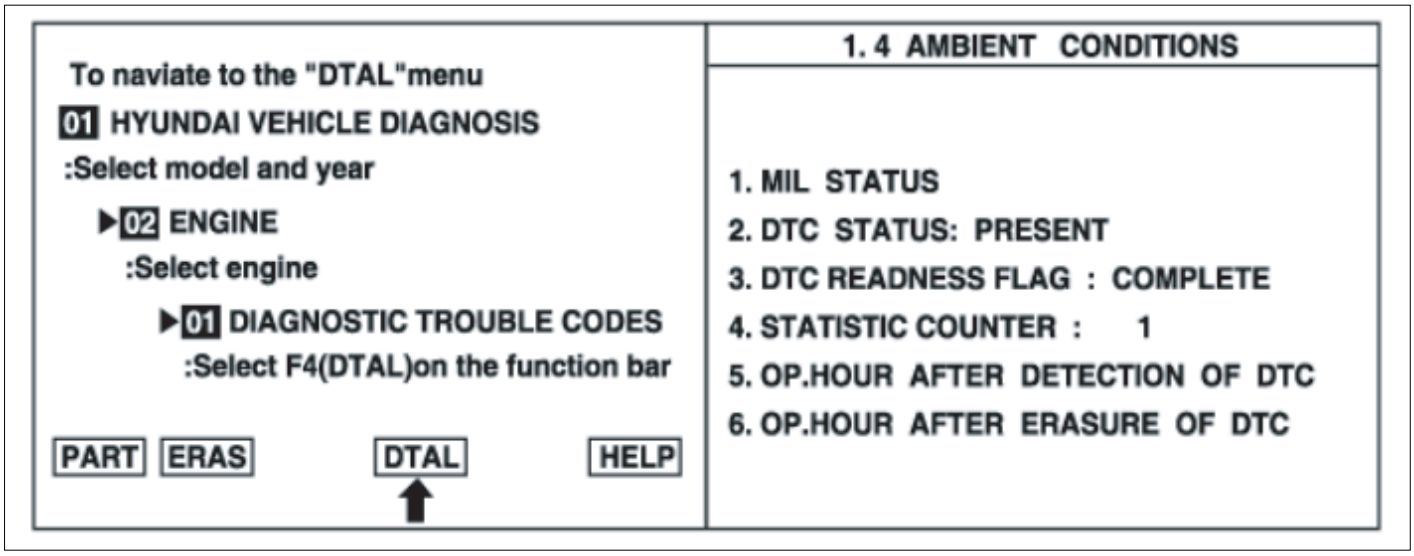

EFRF200D

5. Is parameter displayed "History(Not Present) fault"?

NOTE

- *History (Not Present) fault : DTC occurred but has been cleared.*
- *Present fault : DTC is occurring at present time.*

YES

▶ Fault is intermittent caused by poor contact in the sensor's and/or ECM's connector or was repaired and ECM memory was not cleared. Thoroughly check connectors for looseness, poor connection, bending, corrosion, contamination, deterioration, or damage. Repair or replace as necessary and then go to "Verification of Vehicle Repair" procedure.

NO

▶ Go to next step as below.

TERMINAL AND CONNECTOR INSPECTION E63A088C

1. Many malfunctions in the electrical system are caused by poor harness(es) and terminals. Faults can also be caused by interference from other electrical systems, and mechanical or chemical damage.
2. Thoroughly check connectors for looseness, poor connection, bending, corrosion, contamination, deterioration, or damage.
3. Has a problem been found?

YES

▶ Repair as necessary and go to "Verification of Vehicle Repair" procedure

NO

▶ Go to "Power Circuit Inspection" procedure

POWER CIRCUIT INSPECTION EA3AFED7

1. Ignition "OFF"
2. Disconnect MAF sensor connector
3. Ignition "ON" & Engine "OFF"
4. Measure voltage between terminal 2 of the sensor harness connector and chassis ground

Specification : Approx. B+

5. Is voltage within the specification?

YES

▶ Go to "Signal Circuit Inspection" procedure.

NO

▶ Check for an open or short to ground in the power supply circuit between the MAF sensor and main relay. Repair as necessary and go to "Verification of Vehicle Repair" procedure

SIGNAL CIRCUIT INSPECTION E7A7DBC5

1. Check for open in signal harness

   1) Ignition "OFF"

2) Disconnect ECM connector

3) Measure resistance between terminals 3 of sensor harness connector and 10 of the ECM harness connector

Specification : Approx. 0Ω

<

4) Is resistance within the specification?

YES

▶ Go to next step as below

NO

▶ Check for an open in signal harness. Repair as necessary and go to "Verification of Vehicle Repair" procedure

2. Check for short to ground in signal harness

1) Measure resistance between terminal 3 of sensor harness connector and chassis ground

Specification : Infinite

2) Is resistance within the specification?

YES

▶ Go to "Component Inspection" procedure.

NO

▶ Check for short to ground in signal harness. Repair as necessary and go to "Verification of Vehicle Repair" procedure

COMPONENT INSPECTION E9ED15AB

Refer to DTC P0101.

VERIFICATION OF VEHICLE REPAIR E202FD42

Refer to DTC P0101.

DTC P0103 MASS OR VOLUME AIR FLOW CIRCUIT HIGH INPUT

COMPONENT LOCATION E04A8DAD

Refer to DTC P0101.

GENERAL DESCRIPTION E4EAAA6E

Refer to DTC P0101.

DTC DESCRIPTION EBED42D5

ECM sets DTC P0103 if the ECM detects signal voltage higher than the possible range of a properly operating MAF sensor.

DTC DETECTING CONDITION E70F0199

Item	Detecting Condition	Possible Cause
DTC Strategy	• Electrical Check	• Open in ground harness • Short to battery in signal harness • Contact resistance in connections. • Faulty MAF sensor
Enable Conditions	• 10V 〈 Battery voltage 〈16V • Fuel pump activated • Driving cycle recognized • No power latch phase • Time after start 〉 0.5sec. • No fuel cut off • Engine speed〉 544rpm • Throttle opening 〉 0.0°	
Threshold Value	• MAF sensor voltage 〉 4.9V	
Diagnostic Time	• 0.2sec.	

SPECIFICATION EAAABA82

Test Condition	MAF(Kg/h)
Idle	7~12
Idle & open in ground circuit or short to ground in power circuit	Above 700

SCHEMATIC DIAGRAM EBB537FD

Refer to DTC P0101.

SIGNAL WAVEFORM AND DATA EAA53BD0

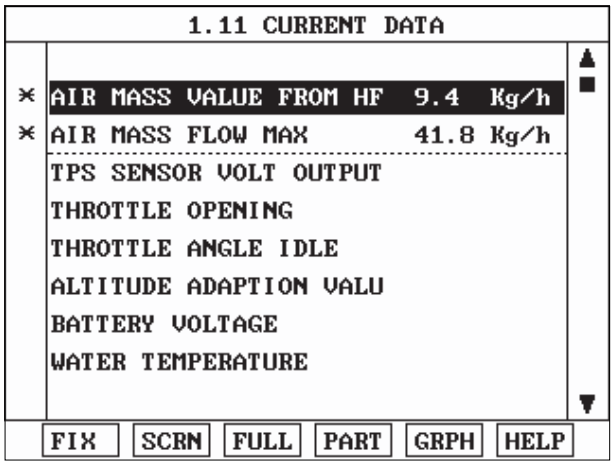

Fig.1

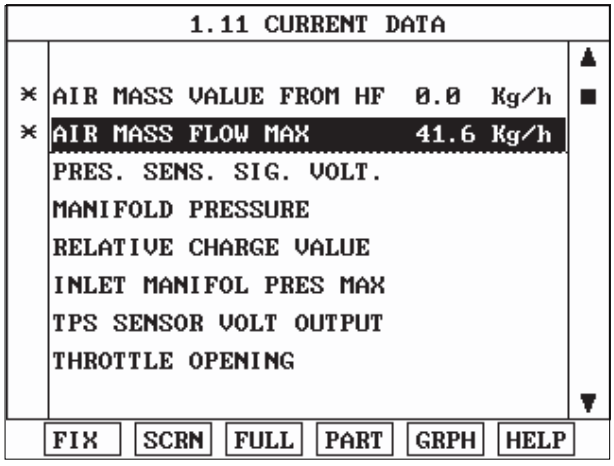

Fig.2

Fig. 1) Normal value with idle after warm up: Approx. 7~12kg/h
Fig. 2) Idle & Open in power, signal circuit or short to ground in signal circuit: Approx. 0kg/h

EFRF200H

MONITOR DTC STATUS E1E86C4B

Refer to DTC P0102.

TERMINAL AND CONNECTOR INSPECTION EF01A5BE

1. Many malfunctions in the electrical system are caused by poor harness(es) and terminals. Faults can also be caused by interference from other electrical systems, and mechanical or chemical damage.

2. Thoroughly check connectors for looseness, poor connection, bending, corrosion, contamination, deterioration, or damage.

3. Has a problem been found?

YES

▶ Repair as necessary and go to "Verification of Vehicle Repair" procedure

NO

▶ Go to "Ground Circuit Inspection" procedure

GROUND CIRCUIT INSPECTION ED7E4DAB

1. Ignition "OFF"

2. Disconnect MAF sensor connector

3. Measure resistance between terminal 1 of the sensor harness connector and chassis ground

Specification : Approx. 0Ω

4. Is resistance within the specification?

YES

▶ Go to "Signal Circuit Inspection" procedure.

NO

▶ Check for an open or short to battery in harness. Repair as necessary and go to "Verification of Vehicle Repair" procedure

SIGNAL CIRCUIT INSPECTION E4A7516A

1. Ignition "ON" & Engine "OFF"
2. Measure voltage between terminal 3 of sensor harness connector and chassis ground

Specification : Approx. 0V

3. Is MAF sensor voltage within the specification?

YES

▶ Go to "Component Inspection" procedure.

NO

▶ Repair short to battery in harness and go to "Verification of Vehicle Repair" procedure.

COMPONENT INSPECTION EFAAE05C

Refer to DTC P0101.

VERIFICATION OF VEHICLE REPAIR EB28B3CB

Refer to DTC P0101.

DTC P0111 INTAKE AIR TEMPERATURE SENSOR1 CIRCUIT RANGE/PERFORMANCE

COMPONENT LOCATION E783ECFE

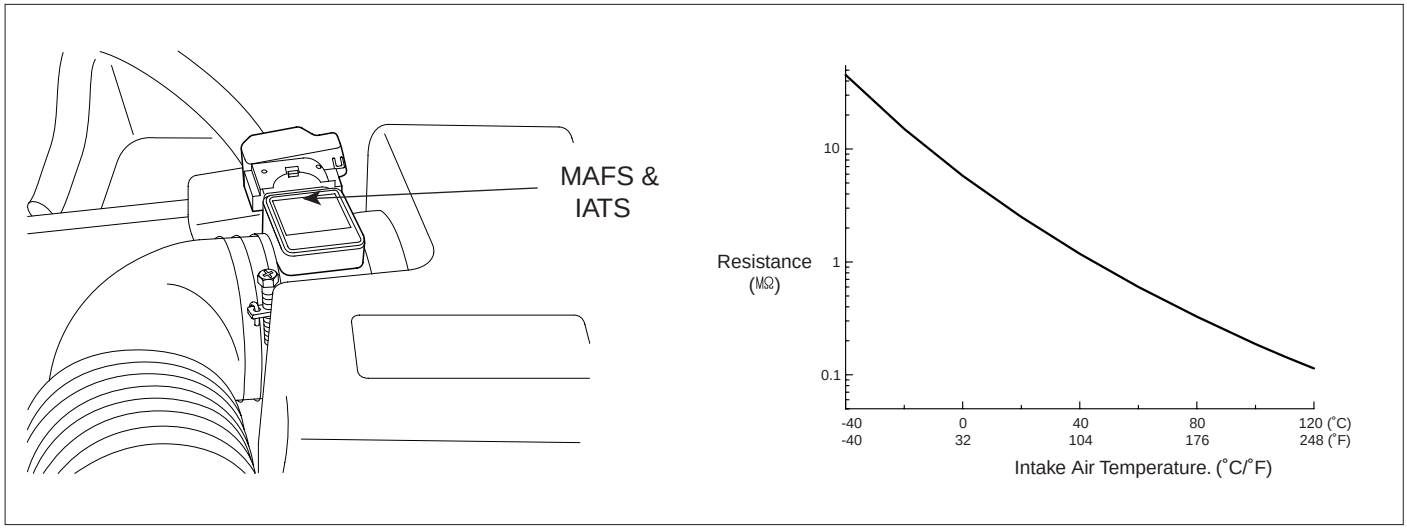

EFRF016B

GENERAL DESCRIPTION E8A9695A

The Intake Air Temperature Sensor (IATS) is installed into the Mass Air Flow Sensor (MAFS). The IATS uses a thermistor whose resistance changes with the temperature. The electrical resistance of the IATS decreases as the temperature increases, and increases as the temperature decreases. The 5 V power source in the ECM is supplied to the IATS via a resistor in the ECM. That is, the resistor in the ECM and the thermistor in the IATS are connected in series. When the resistance value of the thermistor in IATS changes according to the intake air temperature, the signal voltage also changes. Using this signal, the information of the intake air temperature, the ECM corrects basic fuel injection duration and ignition timing.

DTC DESCRIPTION EDFC66F2

The purpose of this diagnosis is to detect a stuck intake air temperature signal. The diagnostic function checks whether after a variation of the calculated intake air temperature also a variation of the measured intake air temperature is detected.ECM sets DTC P0111 when the variation of measured intake air temperature from engine start is smaller than threshold while variation of calculated intake air temperature by ECM is greater than threshold.

DTC DETECTING CONDITION E2BE6E3C

Item		Detecting Condition	Possible Cause
DTC Strategy		• Plausibility check	• Contact resistance in connections. • Faulty IAT sensor
Enable Conditions	Case1	• Out of start • Battery voltage 〉 6V • No Intake Air Temp.(IAT) sensor error • Engine Coolant Temp.(ECT) ≥ 75℃(167°F) • ECT at engine start - ECT at Eng. stop at previous driving cycle ≤ 5.3℃(41.5°F) • -48℃(-54°F) 〈 IAT 〈 143℃(289°F) • ECT at engine start - IAT at engine start 〈 190℃(289°F) • Timer for TIA signal increase check 〉 10min. • Timer for TIA signal decrease check 〉 10min.	
	Case2	• Ignition "ON" • Battery voltage ≥ 6V • No Intake Air Temp.(IAT) sensor error	
Threshold Value	Case1	• IAT stuck signal detected failure	
	Case2	• IAT intermittent detected failure	
Diagnostic Time		• 10sec.	

SPECIFICATION EBB38EAB

Temp.(℃)	Temp.(°F)	Resistance(kΩ)	Temp.(℃)	Temp.(°F)	Resistance(kΩ)
-10	14	8.7~9.7	20	68	2.4~2.5
0	32	5.5~6.1	30	86	1.6~1.7
10	50	3.6~3.9	80	176	Approx. 0.3

SCHEMATIC DIAGRAM E4DCEFC4

[Circuit Diagram]

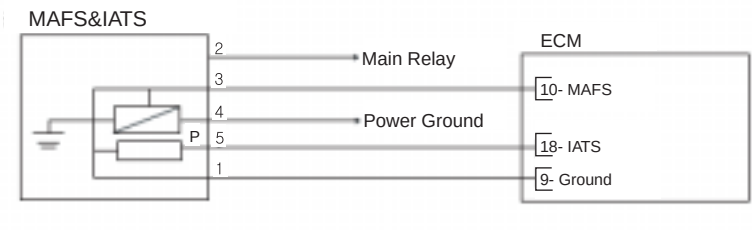

[Connection Information]

Terminal	Connected to	Function
1	ECM Terminal 9	Sensor Ground
2	Main Relay	Power
3	ECM Terminal 10	MAFS
4	Power Ground	Power Ground
5	ECM Terminal 18	IATS

[Harness Connector]

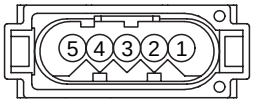

C30

ECM

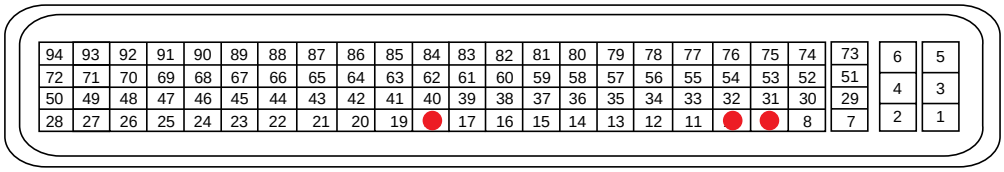

C44

EFRF300D

MONITOR DTC STATUS EFD0B28D

1. Connect scan tool and select "Diagnostic Trouble Codes(DTCs)" mode.
2. Press F4(DTAL) to select DTC information from the DTCs menu.
3. Confirm that "DTC Readiness Flag" indicates "Complete". If not, drive the vehicle within conditions noted in the freeze frame data or enable conditions.
4. Read "DTC Status" parameter.

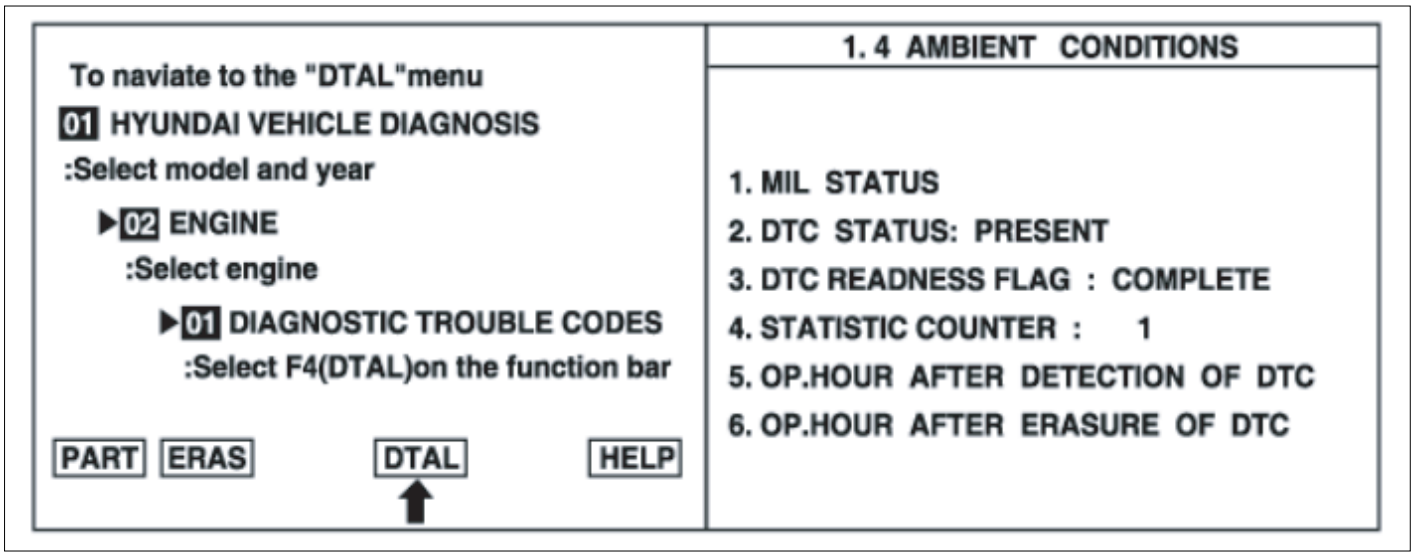

EFRF200D

5. Is parameter displayed "History(Not Present) fault"?

NOTE

- *History (Not Present) fault : DTC occurred but has been cleared.*
- *Present fault : DTC is occurring at present time.*

YES

▶ Fault is intermittent caused by poor contact in the sensor's and/or ECM's connector or was repaired and ECM memory was not cleared. Thoroughly check connectors for looseness, poor connection, bending, corrosion, contamination, deterioration, or damage. Repair or replace as necessary and then go to "Verification of Vehicle Repair" procedure.

NO

▶ Go to next step as below.

TERMINAL AND CONNECTOR INSPECTION EEBF7C57

1. Many malfunctions in the electrical system are caused by poor harness(es) and terminals. Faults can also be caused by interference from other electrical systems, and mechanical or chemical damage.
2. Thoroughly check connectors for looseness, poor connection, bending, corrosion, contamination, deterioration, or damage.
3. Has a problem been found?

YES

▶ Repair as necessary and go to "Verification of Vehicle Repair" procedure

NO

▶ Go to "Component Inspection" procedure

COMPONENT INSPECTION E2348C2C

1. Ignition "OFF"
2. Disconnect IATS connector
3. Measure resistance between terminals 1 and 5 of the sensor connector(Component side).

SPECIFICATION

Temp.(℃)	Temp.(℉)	Resistance(kΩ)	Temp.(℃)	Temp.(℉)	Resistance(kΩ)
-10	14	8.7~9.7	20	68	2.4~2.5
0	32	5.5~6.1	30	86	1.6~1.7
10	50	3.6~3.9	80	176	Approx. 0.3

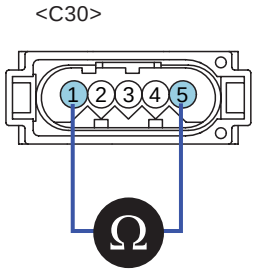

1. Sensor Ground
2. Power
3. MAFS
4. Power Ground
5. IATS

X1111

4. Is resistance within the specification?

YES

▶ Check for poor connection between ECM and component: backed out terminal, improper mating, broken locks or poor terminal to wire connection. Repair as necessary and go to "Verification of Vehicle Repair" procedure

NO

▶ Check IATS for contamination, deterioration, or damage. Substitute with a known-good IATS and check for proper operation. If the problem is corrected, replace IATS and then go to "Verification of Vehicle Repair" procedure

VERIFICATION OF VEHICLE REPAIR E368DDD5

After a repair, it is essential to verify that the fault has been corrected.

1. Connect scan tool and select "Diagnostic Trouble Codes(DTCs)" mode
2. Press F4(DTAL) and confirm that "DTC Readiness Flag" indicates "Complete". If not, drive the vehicle within conditions noted in the freeze frame data or enable conditions
3. Read "DTC Status" parameter
4. Is parameter displayed "History(Not Present) fault"?

YES

▶ System performing to specification at this time. Clear the DTC

NO

▶ Go to the applicable troubleshooting procedure.

DTC P0112 INTAKE AIR TEMPERATURE SENSOR1 CIRCUIT LOW INPUT

COMPONENT LOCATION EF9C4209

Refer to DTC P0111.

GENERAL DESCRIPTION E155EECE

Refer to DTC P0111.

DTC DESCRIPTION E9B3FCDC

ECM sets DTC P0112 if the ECM detects signal voltage lower than the possible range of a properly operating IATS.

DTC DETECTING CONDITION EED7643D

Item	Detecting Condition	Possible Cause
DTC Strategy	• Electrical Check	• Short to ground in signal harness • Contact resistance in connections. • Faulty IAT sensor
Enable Conditions	• Ignition key ON • Time after start 〉 100sec.	
Threshold Value	• IAT voltage 〈 0.22V	
Diagnostic Time	• 10sec.	

SPECIFICATION E775094A

Refer to DTC P0111.

SCHEMATIC DIAGRAM E96427F7

Refer to DTC P0111.

MONITOR DTC STATUS EDEE8DFA

Refer to DTC P0111.

SIGNAL CIRCUIT INSPECTION E0A6F0BF

1. Ignition "ON" & Engine "OFF"
2. Disconnect IAT sensor connector
3. Measure resistance between terminals 5 and chassis ground

Specification : Infinite

4. Is resistance within the specification?

YES

▶ Go to next step as below

NO

▶ Repair as necessary and go to "W/Harness Inspection" procedure.

TERMINAL AND CONNECTOR INSPECTION EBCF0CA9

1. Many malfunctions in the electrical system are caused by poor harness(es) and terminals. Faults can also be caused by interference from other electrical systems, and mechanical or chemical damage.
2. Thoroughly check connectors for looseness, poor connection, bending, corrosion, contamination, deterioration, or damage.
3. Has a problem been found?

YES

▶ Repair as necessary and go to "Verification of Vehicle Repair" procedure

NO

▶ Go to "Component Inspection" procedure

COMPONENT INSPECTION E2FFCE50

Refer to DTC P0111.

VERIFICATION OF VEHICLE REPAIR EB8CB8A5

Refer to DTC P0111.

DTC P0113 INTAKE AIR TEMPERATURE SENSOR1 CIRCUIT HIGH INPUT

COMPONENT LOCATION E967A52F

Refer to DTC P0111.

GENERAL DESCRIPTION EFBCADC3

Refer to DTC P0111.

DTC DESCRIPTION EFFDDD7A

ECM sets DTC P0113 if the ECM detects signal voltage higher than the possible range of a properly operating IATS.

DTC DETECTING CONDITION E29DEB6E

Item	Detecting Condition	Possible Cause
DTC Strategy	• Electrical Check	• Short to battery in signal harness • Open in signal or ground circuit • Contact resistance in connections. • Faulty IAT sensor
Enable Conditions	• Ignition key ON • Time after start 〉 100sec.	
Threshold Value	• IAT voltage 〉 4.93V	
Diagnostic Time	• 10sec.	

SPECIFICATION E31E8CFD

Refer to DTC P0111.

SCHEMATIC DIAGRAM EEEA2C43

Refer to DTC P0111.

MONITOR DTC STATUS E1EB6C71

Refer to DTC P0111.

GROUND CIRCUIT INSPECTION EAC51DAC

1. Ignition "OFF"
2. Disconnect IATS connector
3. Measure resistance between terminals 1 of the sensor harness connector and chassis ground

Specification : Approx. 0Ω

4. Is resistance within the specification?

YES

▶ Go to next step as below

NO

▶ Repair open circuit and go to "Verification of Vehicle Repair" procedure

SIGNAL CIRCUIT INSPECTION E0A289F0

1. Ignition "ON" & Engine "OFF"
2. Measure voltage between terminals 5 of the sensor harness connector and chassis ground

Specification : Approx. 5V

3. Is voltage within the specification?

YES

▶ Go to next step as below

NO

▶ Check for open or short to battery in signal harness. Repair as necessary and go to "Verification of Vehicle Repair" procedure.

TERMINAL AND CONNECTOR INSPECTION ECA9B9BE

1. Many malfunctions in the electrical system are caused by poor harness(es) and terminals. Faults can also be caused by interference from other electrical systems, and mechanical or chemical damage.
2. Thoroughly check connectors for looseness, poor connection, bending, corrosion, contamination, deterioration, or damage.
3. Has a problem been found?

YES

▶ Repair as necessary and go to "Verification of Vehicle Repair" procedure

NO

▶ Go to "Component Inspection" procedure

COMPONENT INSPECTION EEC72C8B

Refer to DTC P0111.

VERIFICATION OF VEHICLE REPAIR EB6CAF0B

Refer to DTC P0111.

DTC P0116 ENGINE COOLANT TEMPERATURE CIRCUIT RANGE/PERFORMANCE

COMPONENT LOCATION E3CF3D79

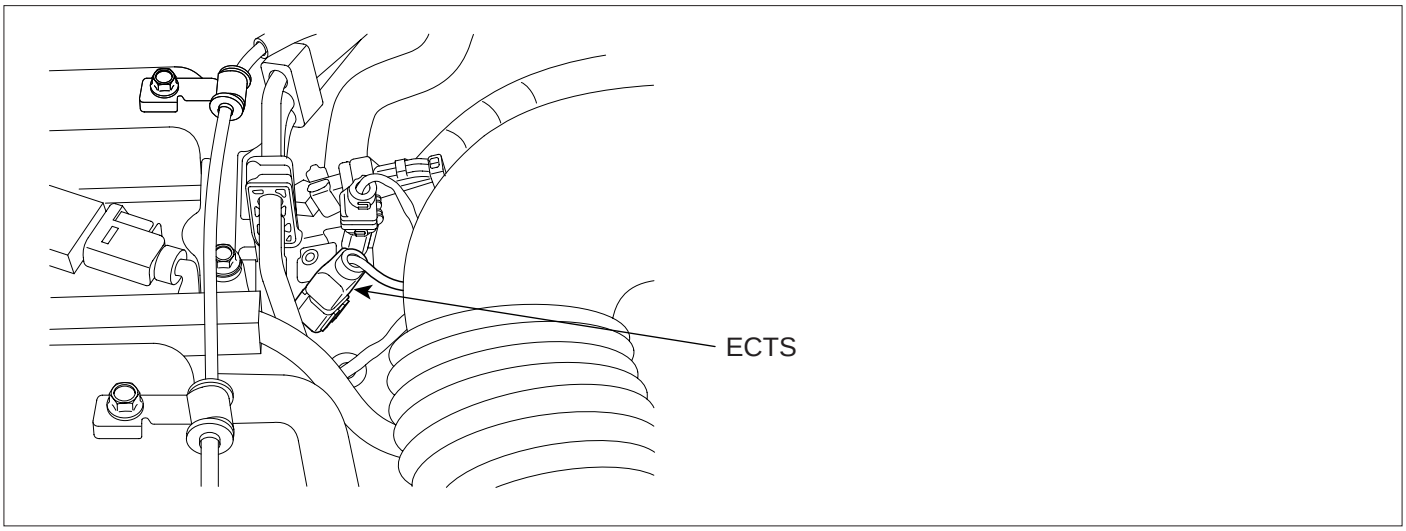

EFRF009A

GENERAL DESCRIPTION EFD5E9E9

An Engine Coolant Temperature Sensor (ECTS) monitors the temperature of the coolant. This input is used by the ECM for engine control and as an enabling criteria for same diagnostics. The air flow coming into the engine is accumulated and used to determine if the engine has been driven within conditions that would allow the engine coolant to heat up normally to the thermostat regulating temperature. If the coolant temperature does not reach regulating temperature of the thermostat, diagnostics that use engine coolant temperature as enabling criteria, may not run when expected.This DTC will set when there has been excessive time to reach a minimum coolant temperature required for closed loop fuel control.

DTC DESCRIPTION E6FDB3D5

An open stuck thermostat means an increase of the engine warm up time and can cause emission increase as well. To detect open stuck thermostat, the ECM checks measured coolant temperature as soon as calculated coolant temperature reaches threshold and sets DTC P0128 when measured coolant temperature is lower than threshold. If same code is set again in the next driving cycle, MIL is illuminated.

DTC DETECTING CONDITION E5AE8ABC

Item	Detecting Condition	Possible Cause
DTC Strategy	• Electrical Check	• Contact resistance in connectors • Faulty cooling system • Faulty thermostat
Enable Conditions	• No ECTS failure • 6V < Battery voltage < 16V	
Threshold Value	• Modeled coolant temp. increase 〉 Threshold But measured coolant temp. increase	
Diagnostic Time	• 10~30min.	

SPECIFICATION EE842D6C

Temp. (°C)	Temp. (°C)	Resistance (kΩ)	Temp. (°C)	Temp. (°C)	Resistance (kΩ)
-20	-4	14.1 ~ 16.8	40	104	Approx. 1.2
0	32	Approx. 5.8	60	140	Approx. 0.6
20	68	2.3 ~ 2.6	80	176	Approx. 0.3

[THERMOSTAT]

Thermostat	Normal Parameter
Valve Opening Temp.	80 ~ 84°C (176~183°F)
Valve Closing Temp.	77°C (170.6°F)
Full Open Lift	Above 8 mm at 95°C (203°F)

SCHEMATIC DIAGRAM ED686968

[Circuit Diagram]

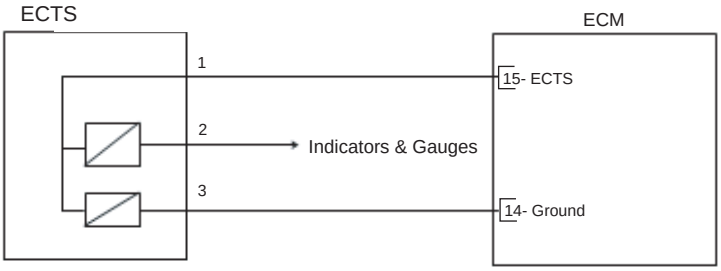

[Connection Information]

Terminal	Connected to	Funtion
1	ECM Terminal 15	ECTS
2	Indicators & Gauges	-
3	ECM Terminal 14	Ground

[Harness Connector]

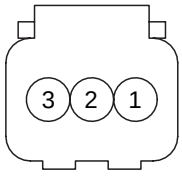

C01

ECM

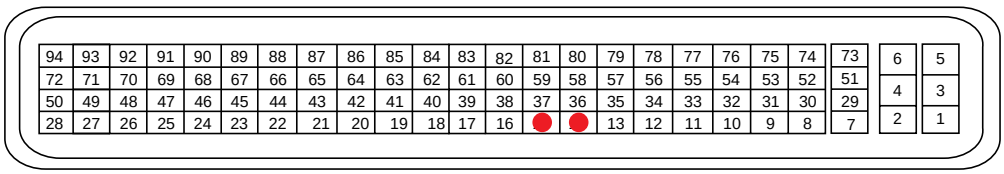

C44

EFRF300E

MONITOR DTC STATUS EACA642B

NOTE

If any codes relating to ECTs are stored, do ALL REPAIRS associated with those codes before proceeding with this troubleshooting

1. Connect scan tool and select "Diagnostic Trouble Codes(DTCs)" mode.

2. Press F4(DTAL) to select DTC information from the DTCs menu.

3. Confirm that "DTC Readiness Flag" indicates "Complete". If not, drive the vehicle within conditions noted in the freeze frame data or enable conditions

4. Read "DTC Status" parameter

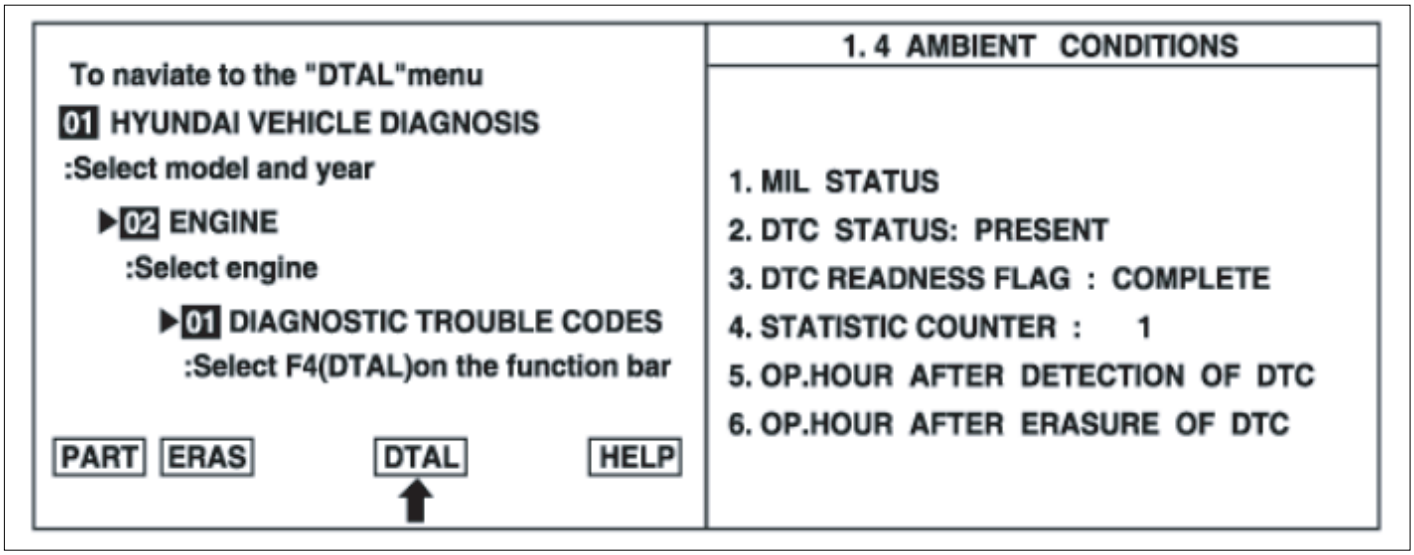

EFRF200D

5. Is parameter displayed "History(Not Present) fault"?

NOTE

- *History (Not Present) fault : DTC occurred but has been cleared.*
- *Present fault : DTC is occurring at present time.*

YES

▶ Fault is intermittent caused by poor contact in the sensor's and/or ECM's connector or was repaired and ECM memory was not cleared. Thoroughly check connectors for loose or poor connections, bending, corrosion, contamination, deterioration, or damage. Repair or replace as necessary and go to "Verification of Vehicle Repair" procedure

NO

▶ Go to next step as below.

TERMINAI ANDL CONNECTOR INSPECTION E37A8D0D

1. Many malfunctions in the electrical system are caused by poor harness(es) and terminals. Faults can also be caused by interference from other electrical systems, and mechanical or chemical damage.

2. Thoroughly check connectors for looseness, poor connection, bending, corrosion, contamination, deterioration, or damage.

3. Has a problem been found?

YES

▶ Repair as necessary and go to "Verification of Vehicle Repair" procedure

NO

▶ Go to next step as below

COMPONENT INSECTION E6D8CE84

1. Ignition "OFF"
2. Disconnect ECTS connector
3. Measure resistance between terminals 1 and 3 of the sensor connector(Component side)

SPECIFICATION :

Temp. (°C)	Temp. (°C)	Resistance (kΩ)	Temp. (°C)	Temp. (°C)	Resistance (kΩ)
-20	-4	14.1 ~ 16.8	40	104	Approx. 1.2
0	32	Approx. 5.8	60	140	Approx. 0.6
20	68	2.3 ~ 2.6	80	176	Approx. 0.3

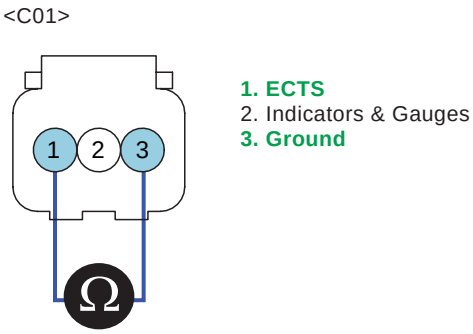

X1162

4. Is resistance within the specification?

YES

▶ Check for poor connection between ECM and component: backed out terminal, improper mating, broken locks or poor terminal to wire connection. Repair as necessary and go to "Verification of Vehicle Repair" procedure

NO

▶ Check ECTS for contamination, deterioration, or damage. Substitute with a known-good ECTS and check for proper operation. If the problem is corrected, replace ECTS and then go to "Verification of Vehicle Repair" procedure

VERIFICATION OF VEHICLE REPAIR E6B0CECA

After a repair, it is essential to verify that the fault has been corrected.

1. Connect scan tool and select "Diagnostic Trouble Codes(DTCs)" mode
2. Press F4(DTAL) and confirm that "DTC Readiness Flag" indicates "Complete". If not, drive the vehicle within conditions noted in the freeze frame data or enable conditions
3. Read "DTC Status" parameter

4. Is parameter displayed "History(Not Present) fault"?

YES

▶ System performing to specification at this time. Clear the DTC.

NO

▶ Go to the applicable troubleshooting procedure.

DTC P0117 ENGINE COOLANT TEMPERATURE CIRCUIT LOW INPUT

COMPONENT LOCATION EA80B033

Refer to DTC P0116.

GENERAL DESCRIPTION ED9C7ACC

The Engine Coolant Temperature Sensor (ECTS) is located in the engine coolant passage of the cylinder head for detecting the engine coolant temperature. The ECTS uses a thermistor whose resistance changes with the temperature. The electrical resistance of the ECTS decreases as the temperature increases, and increases as the temperature decreases. The reference 5 V in the ECM is supplied to the ECTS via a resistor in the ECM. That is, the resistor in the ECM and the thermistor in the ECTS are connected in series. When the resistance value of the thermistor in the ECTS changes according to the engine coolant temperature, the output voltage also changes.
During cold engine operation the ECM increases the fuel injection duration and controls the ignition timing using the information of engine coolant temperature to avoid engine stalling and improve drivability.

DTC DESCRIPTION EB075D34

ECM sets DTC P0117 if the ECM detects signal voltage lower than the possible range of a properly operating ECTS.

DTC DETECTING CONDITION EF3FD7CA

Item	Detecting Condition	Possible Cause
DTC Strategy	• Electrical Check	• Short to ground in signal harness • Contact resistance in connections. • Faulty ECT sensor
Enable Conditions	• Ignition "ON" • 6 ≤ Battery voltage	
Threshold Value	• ECTS voltage < 0.39V	
Diagnostic Time	• 1sec.	

SPECIFICATION EA40D672

Refer to DTC P0116.

SCHEMATIC DIAGRAM EA889BF5

Refer to DTC P0116.

SIGNAL WAVEFORM AND DATA E4CBA6C8

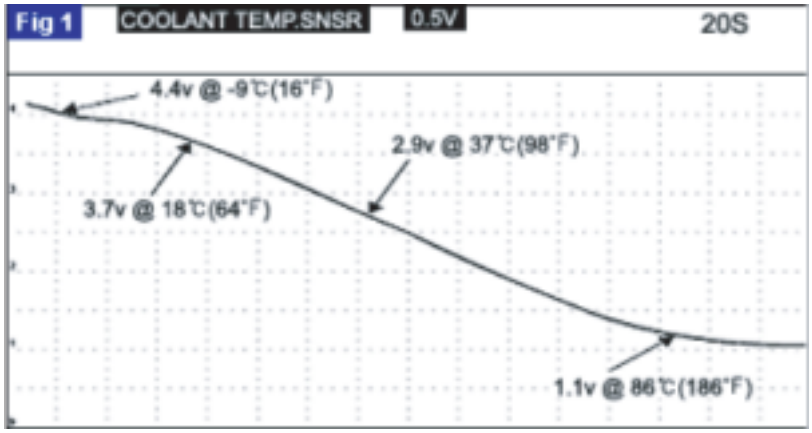

Fig.1

Fig.1) Signal decreases with increasing sensor temperature and increases with decreasing sensor temperature: Approx. 1.03V at 94.5℃(20˚F)

EFRF404G

MONITOR DTC STATUS E51E53B4

1. Connect scan tool and select "Diagnostic Trouble Codes(DTCs)" mode
2. Press F4(DTAL) to select DTC information from the DTCs menu
3. Confirm that "DTC Readiness Flag" indicates "Complete". If not, drive the vehicle within conditions noted in the freeze frame data or enable conditions
4. Read "DTC Status" parameter

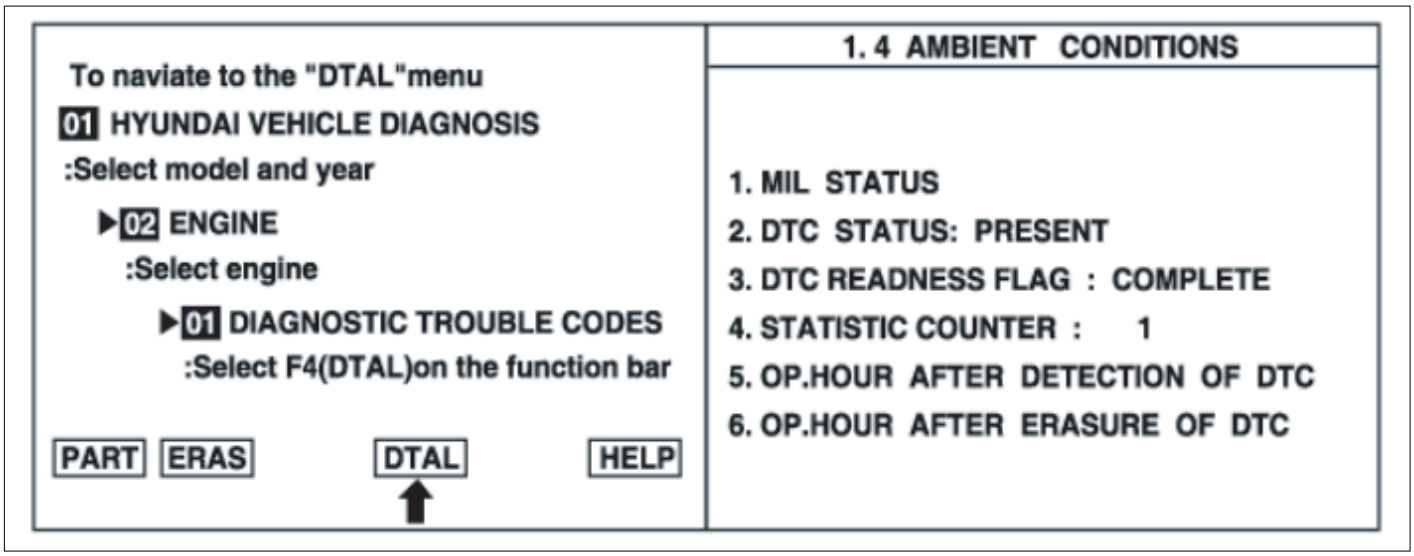

EFRF200D

5. Is parameter displayed "History(Not Present) fault"?

NOTE

- *History (Not Present) fault : DTC occurred but has been cleared.*
- *Present fault : DTC is occurring at present time.*

YES

▶ Fault is intermittent caused by poor contact in the sensor's and/or the ECM's connector, which was repaired but ECM memory was not cleared. Thoroughly check connectors for looseness, poor connection, bending, corrosion, contamination, deterioration, or damage. Repair or replace as necessary and go to "Verification of Vehicle Repair" procedure

NO

▶ Go to next step as below

SIGNAL CIRCUIT INSPECTION E15E15E2

1. Ignition "OFF"
2. Disconnect ECTS connector
3. Measure resistance between terminal 1 of the sensor harness connector and chassis ground

Specification : Infinite

4. Is resistance within the specification?

YES

▶ Go to "Terminal and Connector Inspection" procedure

NO

▶ Repair short to ground in harness and go to "Verification of Vehicle Repair" procedure

TERMINAI AND CONNECTOR INSPECTION E7ADB15A

Refer to DTC P0116.

COMPONENT INSECTION E690BFC3

Refer to DTC P0116.

VERIFICATION OF VEHICLE REPAIR ED48C252

Refer to DTC P0116.

DTC P0118 ENGINE COOLANT TEMPERATURE CIRCUIT HIGH INPUT

COMPONENT LOCATION E3DFD6BE

Refer to DTC P0116.

GENERAL DESCRIPTION E100071F

Refer to DTC P0117.

DTC DESCRIPTION EA7C0C2D

ECM sets DTC P0118 if the ECM detects signal voltage higher than the possible range of a properly operating ECTS.

DTC DETECTING CONDITION E292B567

Item	Detecting Condition	Possible Cause
DTC Strategy	• Electrical Check	• Short to battery in signal harness • Open in signal or ground circuit • Contact resistance in connections. • Faulty ECT sensor
Enable Conditions	• IAT ≥ 30℃(86°F) • Time after start 〉 60sec.	
Threshold Value	• ECTS voltage 〉 4.94V	
Diagnostic Time	• 1sec.	
Mil On Condition	• 2 Driving Cycles	

SPECIFICATION EB040A3E

Refer to DTC P0116.

SCHEMATIC DIAGRAM E1290CE9

Refer to DTC P0116.

MONITOR DTC STATUS E3988F6A

Refer to DTC P0117.

GROUND CIRCUIT INSPECTION E0C2EF2A

1. Ignition "OFF"
2. Disconnect ECTS connector
3. Measure resistance between terminals 3 of the sensor harness connector and chassis ground

Specification : Approx. 0Ω

4. Is resistance within the specification?

YES

▶ Go to "Terminal and connector Inspection" procedure

NO

▶ Repair open circuit and go to "Verification of Vehicle Repair" procedure

SIGNAL CIRCUIT INSPECTION E6607FF5

1. Ignition "ON" & Engine "OFF"
2. Measure voltage between terminal 1 of the sensor harness connector and chassis ground

Specification : Approx. 5V

3. Is voltage within the specification?

YES

▶ Go to "Terminal and Connector Inspection" procedure

NO

▶ Check for short to battery or open in signal harness. Repair as necessary and go to "Verification of Vehicle Repair" procedure.

TERMINAL AND CONNECTOR INSPECTION EEE11FBE

Refer to DTC P0116.

COMPONENT INSECTION E4AAC2BC

Refer to DTC P0116.

VERIFICATION OF VEHICLE REPAIR ECC7116A

Refer to DTC P0116.

DTC P0119 ENGINE COOLANT TEMPERATURE CIRCUIT INTERMITTENT

COMPONENT LOCATION E3CA9A0E

Refer to DTC P0116.

GENERAL DESCRIPTION E71CA390

Refer to DTC P0117.

DTC DESCRIPTION E1CA1C25

ECM sets DTC P0119 if the ECM detects signal increasing ratio exceeds the possible range of a properly operating ECTS.

DTC DETECTING CONDITION E2EE4AC3

Item	Detecting Condition	Possible Cause
DTC Strategy	• Plausibility check	• Contact resistance in connections. • Faulty ECT sensor
Enable Conditions	• Ignition "ON" • Battery voltage ≥ 6V	
Threshold Value	• ECT at previous time - Current ECT 〉 8.3℃(46.9°F)	
Diagnostic Time	• 2sec.	

SPECIFICATION E8A02529

Refer to DTC P0116.

SCHEMATIC DIAGRAM ECDDD7B1

Refer to DTC P0116.

MONITOR DTC STATUS EE9D88DB

Refer to DTC P0117.

TERMINAL AND CONNECTOR INSPECTION E8B96382

Refer to DTC P0116.

COMPONENT INSECTION EE53700E

Refer to DTC P0116.

VERIFICATION OF VEHICLE REPAIR EB1DEEF5

Refer to DTC P0116.

DTC P0121 THROTTLE/PEDAL POSITION SENSOR/SWITCH "A" CIRCUIT RANGE/PERFORMANCE

COMPONENT LOCATION ECA2D687

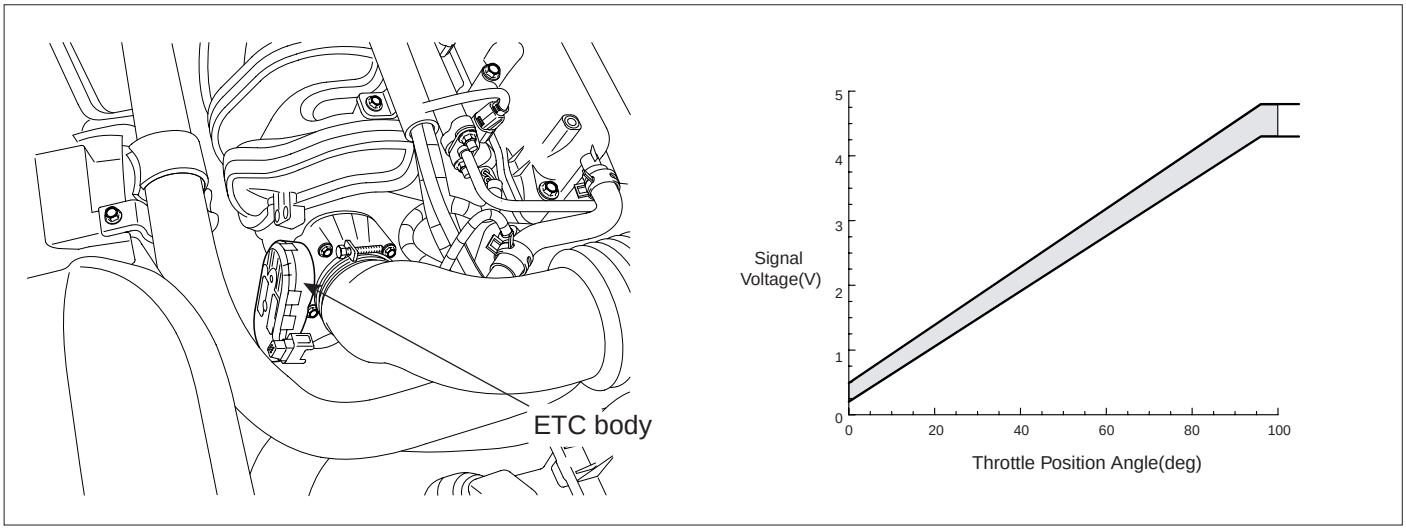

EFRF047A

GENERAL DESCRIPTION E8FCF647

The Electronic Throttle Control(ETC) system is made of the components throttle body, throttle position sensor 1 & 2 and accelerator pedal position sensor 1 & 2. TPS1 & 2 are sharing the same source voltage and ground, the rotating shaft and potentiometer position. The throttle valve opening is control by throttle motor which is controlled by Engine Control Module(ECM).The opposite position indicator shows inverted signal characteristics.TPS1 output voltage increases smoothly in proportion with the throttle valve opening angle after starting. TPS2 output voltage decreases smoothly in inverse proportion with the throttle valve opening angle after starting. Throttle position sensor detects the throttle valve position. It also sends a signal to ECM. The throttle position sensor signal is used for feed back control.

DTC DESCRIPTION EA1ECD3D

The ECM compares the actual measured Mass Air Flow signal with the modeled Mass Air Flow value to detect implausible TPS1 signal. The DTC P0121 is set when the difference between these two value is too high or too low with lambda deviation in same direction for a certain time.

DTC DETECTING CONDITION E37C90DA

Item	Detecting Condition	Possible Cause
DTC Strategy	• Plausibility check between TPS1 and MAF	• Contact resistance in connectors • Air leakage in intake system • Faulty TPS1
Enable Conditions	• Ignition "ON" • No engine stop and engine start • No TPS adaptation request • No TPS error • |actual TPS1 - actual TPS2| 〉 8°	
Threshold Value	• Integrated error between measured MAF and substitute MAF of TPS1 〉 TPS2 or Mean value error between measured MAF and substitute MAF of TPS1 〉 threshold	
Diagnostic Time	• 0.3sec.	

SPECIFICATION E69CE363

Test Condition	TPS1	TPS2
Closed Throttle Status	0.2~0.8V	4.3~4.8V
Wide Open Throttle(After starting engine)	4.3~4.8V	0.2~0.8V

SCHEMATIC DIAGRAM EB1CDA8A

[Circuit Diagram]

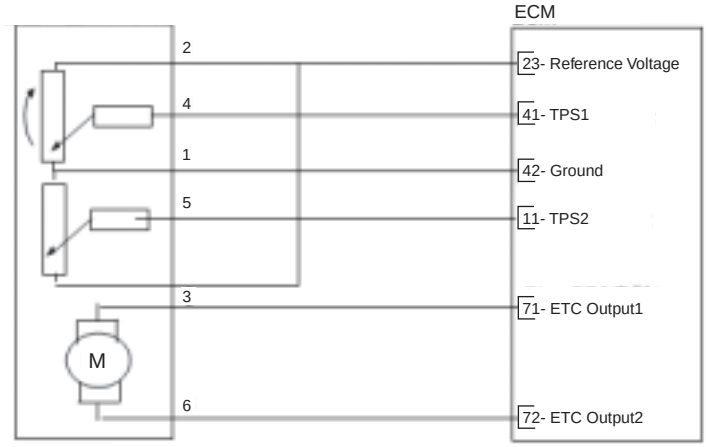

[Connection Information]

Terminal	Connected to	Function
1	ECM Terminal 42	Ground
2	ECM Terminal 23	Reference Voltage
3	ECM Terminal 71	ECT Output1
4	ECM Terminal 41	TPS1
5	ECM Terminal 11	TPS2
6	ECM Terminal 72	ECT Output2

[Harness Connector]

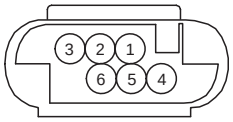

C06

ECM

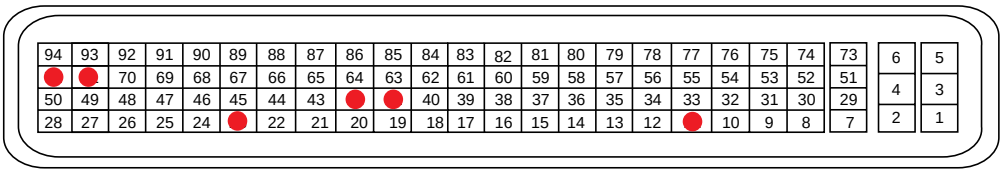

C44

EFRF300W

SIGNAL WAVEFORM AND DATA E2CB6E2A

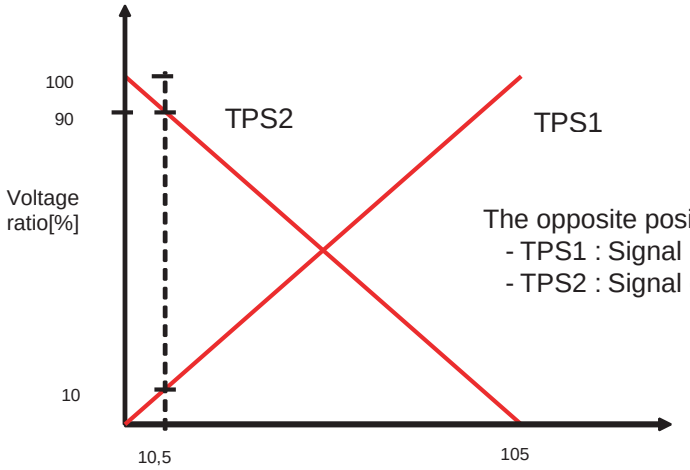

The opposite position indicator shows inverted signal characteristics
- TPS1 : Signal increases with throttle opening angle
- TPS2 : Signal decreases with throttle opening angle

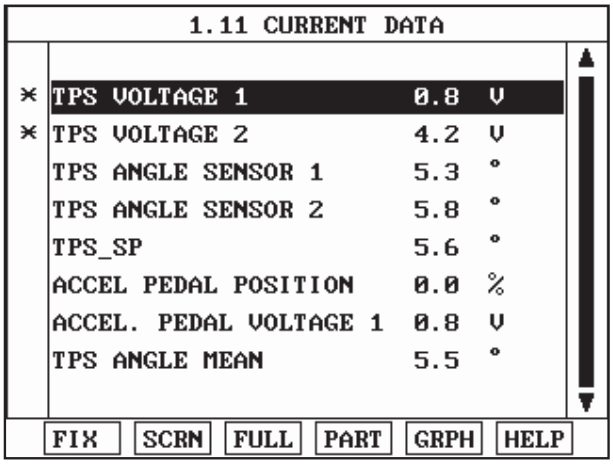

Fig.1

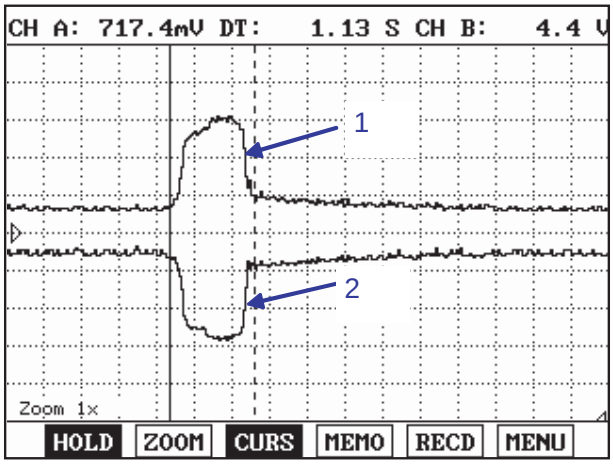

Fig.2

Fig. 1) TPS1 output voltage after engine start:
Closed throttle status : Approx. 0.2~0.8V, Wide open throttle : Approx 4.3~4.8V

Fig. 2)
1(TPS1) : Output voltage increases smoothly in proportion with the throttle valve opening angle after starting.
2(TPS2) : Output voltage decreases smoothly in inverse proportion with the throttle valve opening angle after starting.

EFRF400A

MONITOR DTC STATUS E9AAF324

NOTE

If any codes relating to TPS1 or MAFS are stored, do ALL REPAIRS associated with those codes before proceeding with further troubleshooting

1. Connect scan tool and select "Diagnostic Trouble Codes(DTCs)" mode

2. Press F4(DTAL) to select DTC information from the DTCs menu

3. Confirm that "DTC Readiness Flag" indicates "Complete". If not, drive the vehicle within conditions noted in the freeze frame data or enable conditions

4. Read "DTC Status" parameter

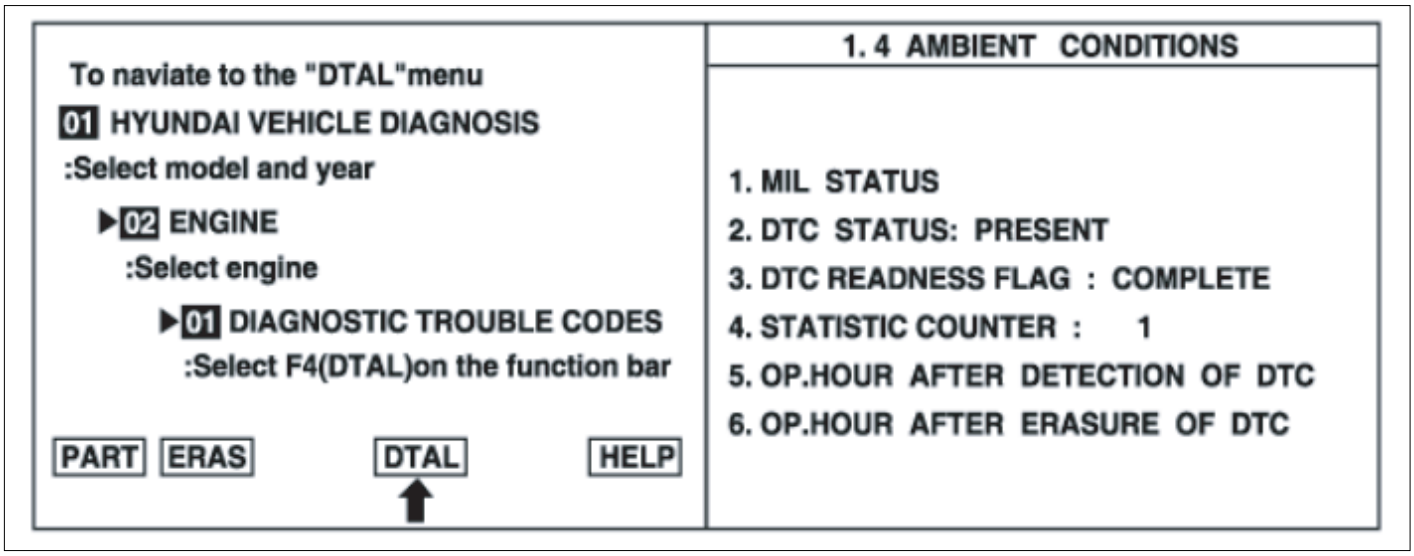

EFRF200D

5. Is parameter displayed "History(Not Present) fault"?

NOTE

- *History (Not Present) fault : DTC occurred but has been cleared.*
- *Present fault : DTC is occurring at present time.*

YES

▶ Fault is intermittent caused by poor contact in the sensor's and/or the ECM's connector, which was repaired but ECM memory was not cleared. Thoroughly check connectors for looseness, poor connection, bending, corrosion, contamination, deterioration, or damage. Repair or replace as necessary and go to "Verification of Vehicle Repair" procedure

NO

▶ Go to next step as below

AIR LEAKAGE INSPECTION E131ABB2

1. Visually/physically inspect the following items:
   - Vacuum hoses for splits, kinks and improper connections.
   - EVAP system for leakage
   - PCV hose for proper installation

2. Was a problem found in any of the above areas?

YES

▶ Repair as necessary and go to "Verification of Vehicle Repair" procedure

NO

▶ Go to next step as below

TERMINAL AND CONNECTOR INSPECTION EEBAA76F

1. Many malfunctions in the electrical system are caused by poor harness(es) and terminals. Faults can also be caused by interference from other electrical systems, and mechanical or chemical damage.

2. Thoroughly check connectors for looseness, poor connection, bending, corrosion, contamination, deterioration, or damage.

3. Has a problem been found?

YES

▶ Repair as necessary and go to "Verification of Vehicle Repair" procedure

NO

▶ Go to "Component Inspection" procedure

COMPONENT INSECTION E9DE0A23

1. After engine starting, connect Scantool and monitor the "TPS1" parameter on the Scantool data list.

Specification :
- Closed throttle status : Approx. 0.2~0.8V, Wide open throttle : Approx 4.3~4.8V
- Signal increases with throttle opening angle

2. Is sensor data near the specified value?

YES

▶ Check for poor connection between ECM and component: backed out terminal, improper mating, broken locks or poor terminal to wire connection. Repair as necessary and go to "Verification of Vehicle Repair" procedure

NO

▶ Check TPS1 for contamination, deterioration, or damage. Substitute with a known-good TPS1 and check for proper operation. If the problem is corrected, replace TPS1 and then go to "Verification of Vehicle Repair" procedure.

NOTE

It is necessary to perform the Initialization with Scan Tool when the throttle body assembly or ECM is replaced, After initialization, the system normality should be confirmed by observing whether throttle valve is following the accelerator pedal or not

VERIFICATION OF VEHICLE REPAIR ED09829B

After a repair, it is essential to verify that the fault has been corrected.

1. Connect scan tool and select "Diagnostic Trouble Codes(DTCs)" mode

2. Press F4(DTAL) and confirm that "DTC Readiness Flag" indicates "Complete". If not, drive the vehicle within conditions noted in the freeze frame data or enable conditions

3. Read "DTC Status" parameter

4. Is parameter displayed "History(Not Present) fault"?

YES

▶ System performing to specification at this time. Clear the DTC.

NO

▶ Go to the applicable troubleshooting procedure.

DTC P0122 THROTTLE/PEDAL POSITION SENSOR/SWITCH "A" CIRCUIT LOW INPUT

COMPONENT LOCATION E3E2E6EA

Refer to DTC P0121.

GENERAL DESCRIPTION E7FD46C8

Refer to DTC P0121.

DTC DESCRIPTION E77A7893

ECM sets DTC P0122 if the ECM detects signal voltage lower than the possible range of a properly operating TPS1.

DTC DETECTING CONDITION EFFC65EE

Item	Detecting Condition	Possible Cause
DTC Strategy	• Electrical Check	• Open in power supply harness • Short to ground in power supply or signal harness • Contact resistance in connectors • Faulty TPS1
Enable Conditions	• Ignition "ON" • Battery voltage 〉 6V • No TPS error	
Threshold Value	• TPS1 < 0.1V	
Diagnostic Time	• 1sec.	

SPECIFICATION EA7C46B9

Refer to DTC P0121.

SCHEMATIC DIAGRAM E7482EDF

Refer to DTC P0121.

SIGNAL WAVEFORM AND DATA EA1B51DD

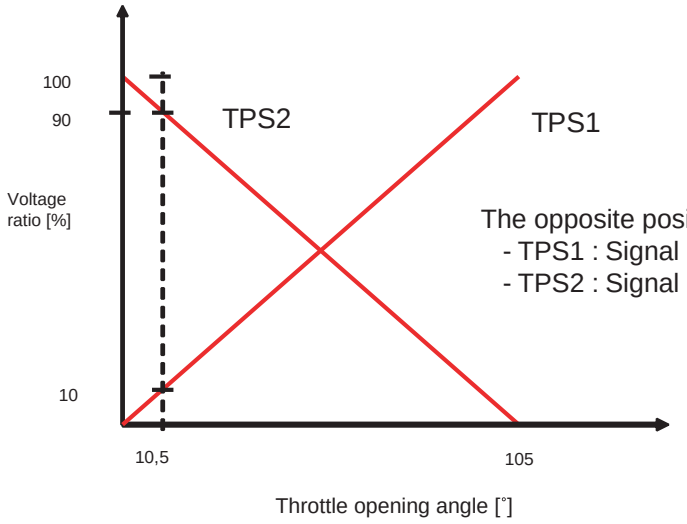

The opposite position indicator shows inverted signal characteristics
- TPS1 : Signal increases with throttle opening angle
- TPS2 : Signal decreases with throttle opening angle

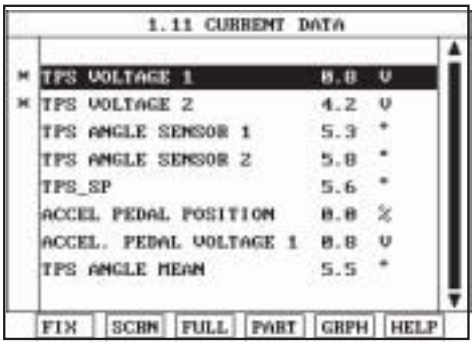

Fig.1

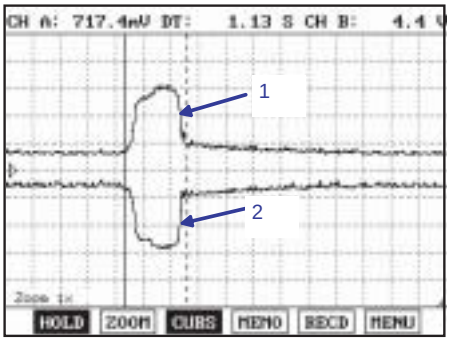

Fig.2

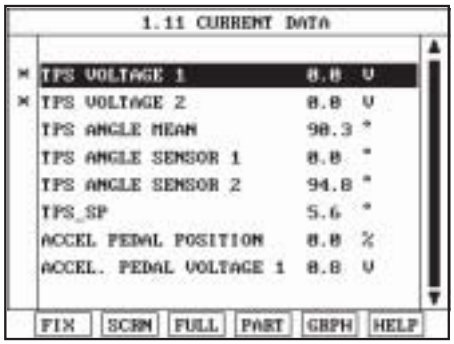

Fig.3

Fig. 1) TPS1 output voltage after engine start:
Closed throttle status : Approx. 0.2~0.8V, Wide open throttle : Approx 4.3~4.8V

Fig. 2)
1(TPS1) : Output voltage increases smoothly in proportion with the throttle valve opening angle after starting.
2(TPS2) : Output voltage decreases smoothly in inverse proportion with the throttle valve opening angle after starting.

Fig. 3) Open in TPS1 power supply circuit or short to ground in signal circuit : Approx. 0V

EFRF400B

MONITOR DTC STATUS E5C193BD

1. Connect scan tool and select "Diagnostic Trouble Codes(DTCs)" mode
2. Press F4(DTAL) to select DTC information from the DTCs menu
3. Confirm that "DTC Readiness Flag" indicates "Complete". If not, drive the vehicle within conditions noted in the freeze frame data or enable conditions
4. Read "DTC Status" parameter

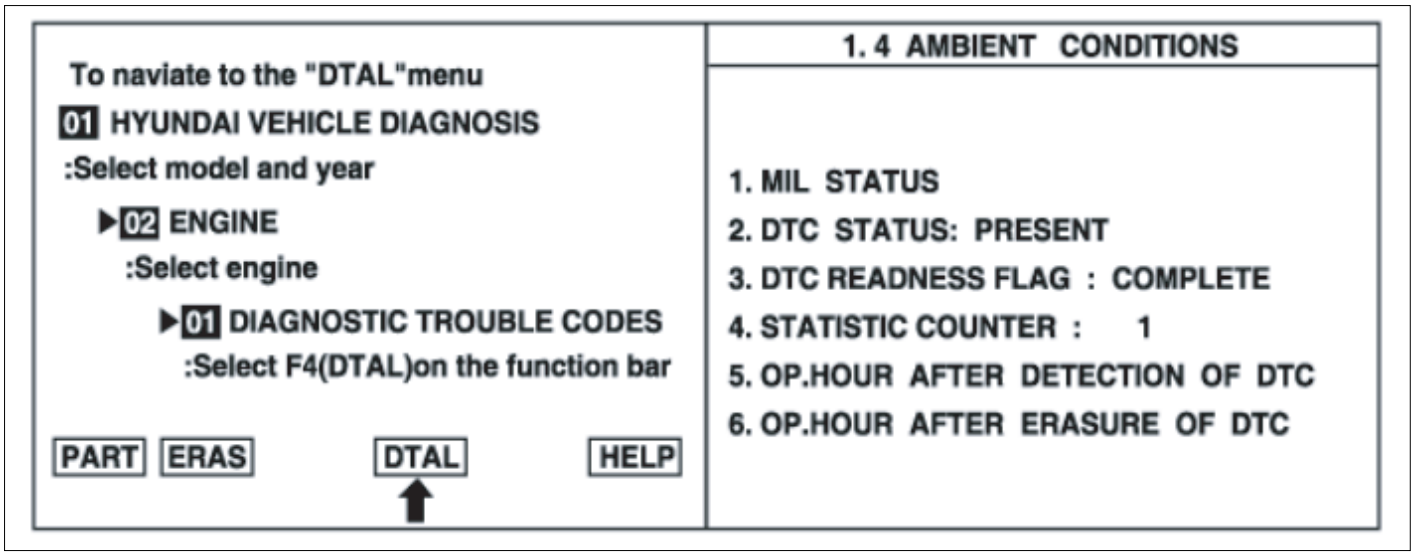

EFRF200D

5. Is parameter displayed "History(Not Present) fault"?

NOTE

- *History (Not Present) fault : DTC occurred but has been cleared.*
- *Present fault : DTC is occurring at present time.*

YES

▶ Fault is intermittent caused by poor contact in the sensor's and/or the ECM's connector, which was repaired but ECM memory was not cleared. Thoroughly check connectors for looseness, poor connection, bending, corrosion, contamination, deterioration, or damage. Repair or replace as necessary and go to "Verification of Vehicle Repair" procedure

NO

▶ Go to next step as below

TERMINAL AND CONNECTOR INSPECTION EDFC08D0

1. Many malfunctions in the electrical system are caused by poor harness(es) and terminals. Faults can also be caused by interference from other electrical systems, and mechanical or chemical damage.

2. Thoroughly check connectors for looseness, poor connection, bending, corrosion, contamination, deterioration, or damage.

3. Has a problem been found?

YES

▶ Repair as necessary and go to "Verification of Vehicle Repair" procedure

NO

▶ Go to "Power Circuit Inspection" procedure

POWER CIRCUIT INSPECTION E101DA16

1. Ignition "OFF"
2. Disconnect TPS1 connector
3. Ignition "ON" & Engine "OFF"
4. Measure voltage between terminal 2 of the sensor harness connector and chassis ground

Specification : Approx. 5V

5. Is voltage within the specification?

YES

▶ Go to "Signal Circuit inspection" procedure.

NO

▶ Possibility of open or short to ground in 5V reference circuit. Repair as necessary and go to "Verification of Vehicle Repair" procedure

SIGNAL CIRCUIT INSPECTION EFF8B4EC

1. Measure voltage between terminal 4 of the sensor harness connector and chassis ground

Specification : Approx. 5V

2. Is voltage within the specification?

YES

▶ Go to "Component Inspection" procedure

NO

▶ Check the short to ground in signal circuit.
Repair as necessary and go to "Verification of Vehicle Repair" procedure

COMPONENT INSECTION E21DB6F1

1. Reconnect the TPS1 connector
2. After engine starting, connect Scantool and monitor the "TPS1" parameter on the Scantool data list.

Specification : - Closed throttle status : Approx. 0.2~0.8V, Wide open throttle : Approx 4.3~4.8V - Signal increases with throttle opening angle

3. Is sensor data near the specified value?

YES

▶ Check for poor connection between ECM and component: backed out terminal, improper mating, broken locks or poor terminal to wire connection. Repair as necessary and go to "Verification of Vehicle Repair" procedure

NO

▶ Check TPS1 for contamination, deterioration, or damage. Substitute with a known-good TPS1 and check for proper operation. If the problem is corrected, replace TPS1 and then go to "Verification of Vehicle Repair" procedure.

NOTE

It is necessary to perform the Initialization with Scan Tool when the throttle body assembly or ECM is replaced, After initialization, the system normality should be confirmed by observing whether throttle valve is following the accelerator pedal or not

VERIFICATION OF VEHICLE REPAIR ECCEF74C

Refer to DTC P0121.

DTC P0123 THROTTLE/PEDAL POSITION SENSOR/SWITCH "A" CIRCUIT HIGH INPUT (GASOLINE) / ACCELERATOR POSITION SENSOR 1-HIGH INPUT (DIESEL)

COMPONENT LOCATION E31949E1

Refer to DTC P0121.

GENERAL DESCRIPTION E32F2CDC

Refer to DTC P0121.

DTC DESCRIPTION EFBA7ADE

ECM sets DTC P0123 if the ECM detects signal voltage higher than the possible range of a properly operating TPS1.

DTC DETECTING CONDITION E96EA4DB

Item	Detecting Condition	Possible Cause
DTC Strategy	• Electrical Check	• Open in signal or ground circuit • Short to battery in signal circuit • Contact resistance in connectors • Faulty TPS1
Enable Conditions	• Ignition "ON" • Battery voltage 〉 6V • No TPS error	
Threshold Value	• TPS1 〉 4.9V	
Diagnostic Time	• 1sec.	

SPECIFICATION EDB7D8F2

Refer to DTC P0121.

SCHEMATIC DIAGRAM EEA07504

Refer to DTC P0121.

SIGNAL WAVEFORM AND DATA EBF4120A

Refer to DTC P0122.

MONITOR DTC STATUS EFA5DDBF

Refer to DTC P0122.

TERMINAL AND CONNECTOR INSPECTION E3061DAE

1. Many malfunctions in the electrical system are caused by poor harness(es) and terminals. Faults can also be caused by interference from other electrical systems, and mechanical or chemical damage.

2. Thoroughly check connectors for looseness, poor connection, bending, corrosion, contamination, deterioration, or damage.

3. Has a problem been found?

YES

▶ Repair as necessary and go to "Verification of Vehicle Repair" procedure

NO

▶ Go to "Ground Circuit Inspection" procedure

GROUND CIRCUIT INSPECTION EFB488FF

1. Ignition "OFF"
2. Disconnect TPS1 connector
3. Ignition "ON" & Engine "OFF"
4. Measure resistance between terminal 1 of the sensor harness connector and chassis ground

Specification : Approx. 0Ω

5. Is resistance within the specification?

YES

▶ Go to step "Signal Circuit Inspection" procedure

NO

▶ Check the ground circuit for an open.
Repair as necessary and go to "Verification of Vehicle Repair" procedure

SIGNAL CIRCUIT INSPECTION EA2CD4DA

1. Ignition "ON" & Engine "OFF"
2. Measure voltage between terminal 4 of the sensor harness connector and chassis ground

Specification : Approx. 5V

3. Is voltage within the specification?

YES

▶ Go to "Component Inspection" procedure

NO

▶ Possibility of open or short to power in signal circuit. Repair as necessary and go to "Verification of Vehicle Repair" procedure

COMPONENT INSECTION EE23FAC7

1. Reconnect the TPS1 connector

2. After engine starting, connect Scantool and monitor the "TPS1" parameter on the Scantool data list.

Specification :
- Closed throttle status : Approx. 0.2~0.8V, Wide open throttle : Approx 4.3~4.8V
- Signal increases with throttle opening angle

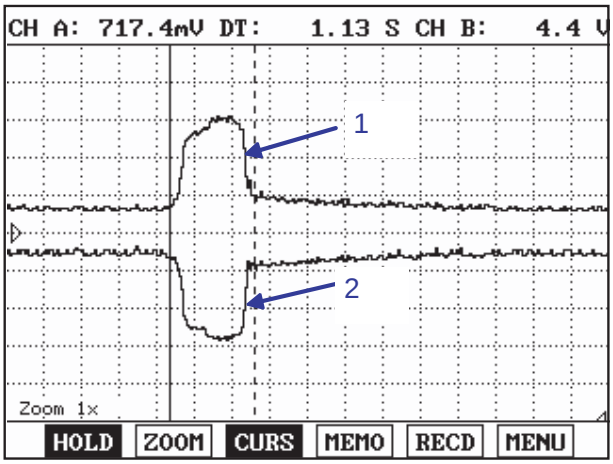

EFRF102A

3. Is sensor data near the specified value?

YES

▶ Check for poor connection between ECM and component: backed out terminal, improper mating, broken locks or poor terminal to wire connection. Repair as necessary and go to "Verification of Vehicle Repair" procedure

NO

▶ Check TPS1 for contamination, deterioration, or damage. Substitute with a known-good TPS1 and check for proper operation. If the problem is corrected, replace TPS1 and then go to "Verification of Vehicle Repair" procedure.

NOTE

It is necessary to perform the Initialization with Scan Tool when the throttle body assembly or ECM is replaced, After initialization, the system normality should be confirmed by observing whether throttle valve is following the accelerator pedal or not

VERIFICATION OF VEHICLE REPAIR E042F8BB

Refer to DTC P0121.

DTC P0130 HO2S CIRCUIT (BANK 1/ SENSOR 1)

COMPONENT LOCATION EC33319A

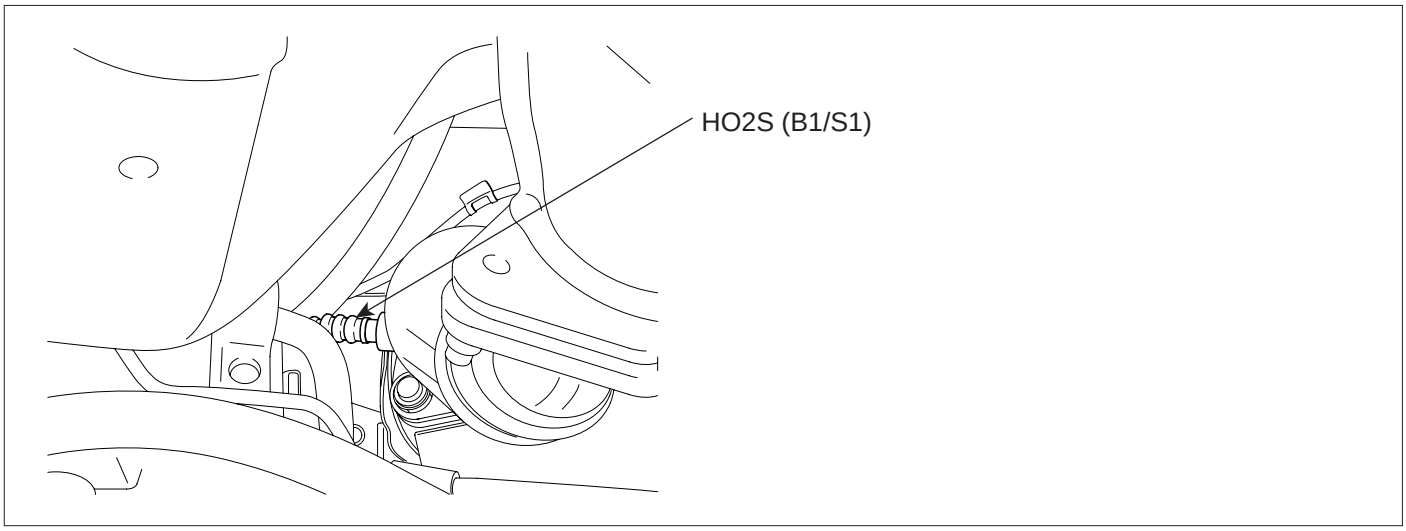

EFRF011A

GENERAL DESCRIPTION EE155E9E

The HO2S is used to supply the ECM with information regarding the composition of the air/fuel mixture. The HO2S is positioned in the exhaust pipe ahead of the TWC. To measure the oxygen content, the HO2S requires a supply of ambient air as a reference. Since this is supplied through the wiring, the lead must not be clamped or damaged in any other way. The HO2S produces a voltage that varies between 0.1V and 0.9V under normal operating conditions. The Engine Control Module (ECM) monitors this voltage and determines if the exhaust gas is lean or rich. If the voltage input at the ECM is under approx. 0.45V the exhaust is lean, and if the voltage input is over approx. 0.45V the exhaust is rich. The ECM constantly monitors the HO2S signal during closed loop operation and compensates for a rich or lean condition by decreasing or increasing injector pulse width as necessary.

DTC DESCRIPTION E3C1A678

ECM sets DTC P0130 if the ECM detects that the front HO2S signal circuit is open.

DTC DETECTING CONDITION EEA120BF

Item	Detecting Condition	Possible Cause
DTC Strategy	• Electrical Check	• Open in signal harness • Open in ground harness • Contact resistance in connectors • Faulty Heated O2 Sensor(HO2S)
Enable Conditions	• Ignition "ON" • O2 sensor heater close loop control • No O2 sensor heater error • Exhaust gas temperature 〉 500°C(932°F) • Lambda close loop control activated	
Threshold Value	• HO2S < 0.474V or 〉 0.376V & Internal resistance 〉 60㎏Ω	
Diagnostic Time	• 5sec.	

SCHEMATIC DIAGRAM EF77AE1D

[Circuit Diagram]

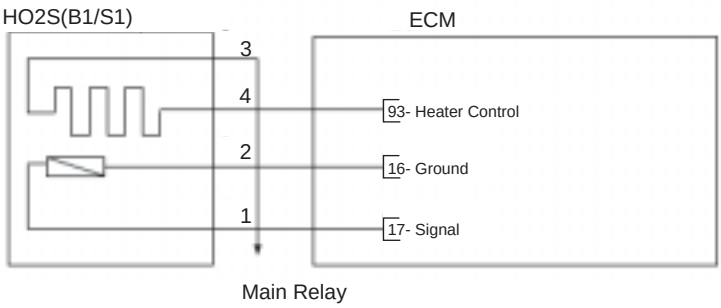

[Connection Information]

Terminal	Connected to	Function
1	ECM Terminal 17	Signal
2	ECM Terminal 16	Ground
3	Main Relay	Power
4	ECM Terminal 93	Heater Control

[Harness Connector]

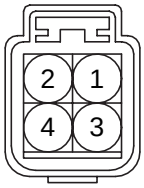

C46

ECM

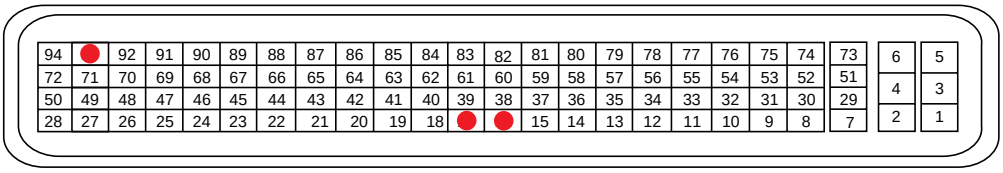

C44

EFRF300B

SIGNAL WAVEFORM AND DATA EC7C56AA

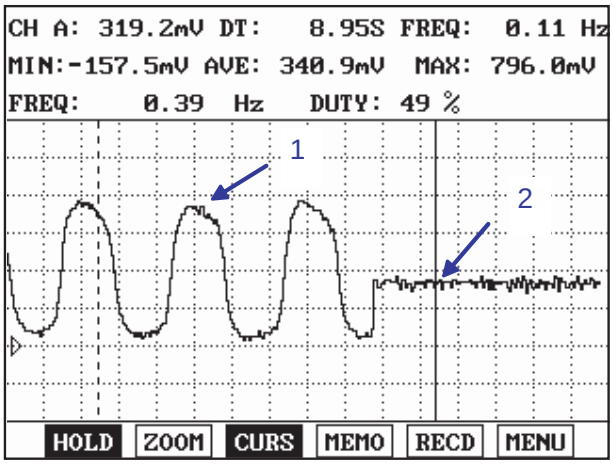

Fig.1

1.Normal value with idle after warm up : Signal is switching from rich(above 0.45V) to lean(below 0.45V) a minimum of 3 times in 10 seconds.
2. Open in signal circuit with ignition ON : Approx. 450~500mV

EFRF201K

MONITOR DTC STATUS EF163186

1. Connect scan tool and select "Diagnostic Trouble Codes(DTCs)" mode

2. Press F4(DTAL) to select DTC information from the DTCs menu

3. Confirm that "DTC Readiness Flag" indicates "Complete". If not, drive the vehicle within conditions noted in the freeze frame data or enable conditions

4. Read "DTC Status" parameter

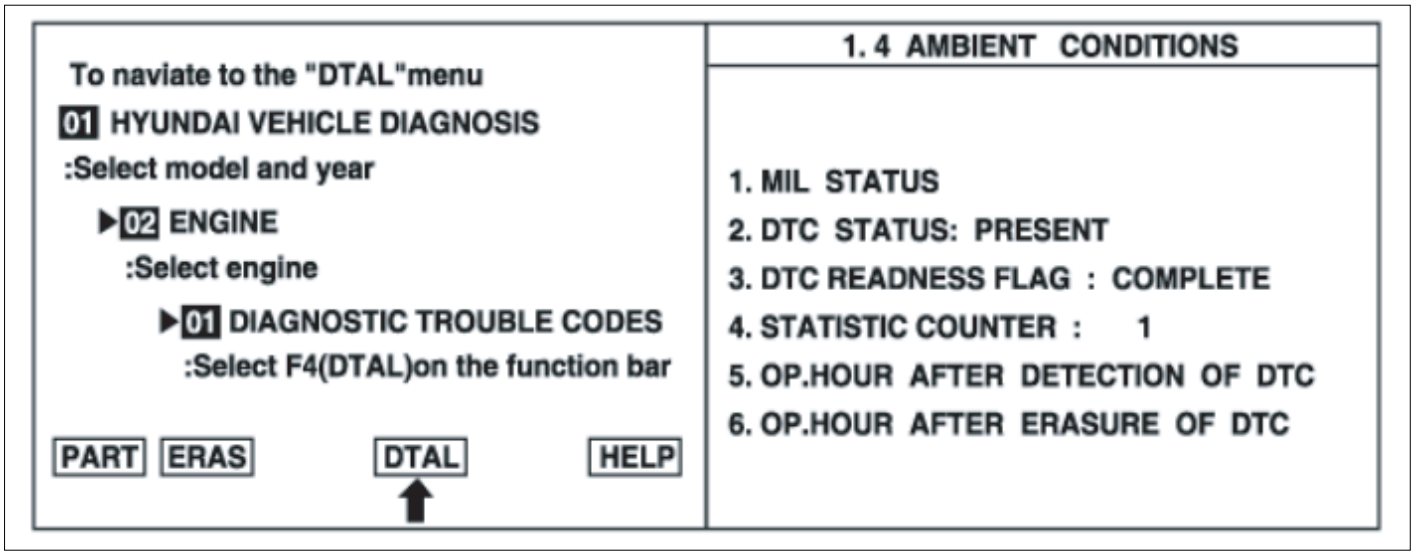

EFRF200D

5. Is parameter displayed "History(Not Present) fault"?

NOTE

- *History (Not Present) fault : DTC occurred but has been cleared.*
- *Present fault : DTC is occurring at present time.*

YES

▶ Fault is intermittent caused by poor contact in the sensor's and/or the ECM's connector, which was repaired but ECM memory was not cleared. Thoroughly check connectors for looseness, poor connection, bending, corrosion, contamination, deterioration, or damage. Repair or replace as necessary and go to "Verification of Vehicle Repair" procedure

NO

▶ Go to next step as below

TERMINAL AND CONNECTOR INSPECTION E26668BC

1. Many malfunctions in the electrical system are caused by poor harness(es) and terminals. Faults can also be caused by interference from other electrical systems, and mechanical or chemical damage.

2. Thoroughly check connectors for looseness, poor connection, bending, corrosion, contamination, deterioration, or damage.

3. Has a problem been found?

YES

▶ Repair as necessary and go to "Verification of Vehicle Repair" procedure

NO

▶ Go to "Ground Circuit Inspection" procedure

GROUND CIRCUIT INSPECTION E841010C

1. Ignition "OFF"
2. Disconnect HO2S connector.
3. Measure resistance between terminals 2 of the sensor harness connector and chassis ground

Specification : Approx. 0Ω

4. Is resistance within the specification?

YES

▶ Go to "Signal circuit inspection" procedure

NO

▶ Repair open in the ground circuit and go to "Verification of Vehicle Repair" procedure

SIGNAL CIRCUIT INSPECTION E868B635

1. Ignition "ON" & Engine "OFF"
2. Measure voltage between terminals 1 of the sensor harness connector and chassis ground

Specification : Approx. 0.4~0.5V

3. Is voltage within the specification?

YES

▶ Go to "Component Inspection" procedure

NO

▶ Repair open in the ground circuit and go to "Verification of Vehicle Repair" procedure

COMPONENT INSECTION EB83DD37

1. With ignition "OFF", reconnect the HO2S connector
2. Visually/physically inspect following items:
   - Inspect the front HO2S for any silicon contamination. This contamination will be indicated by a white powdery coating and this will result in a but false voltage signal
   - If contamination is evident on the HO2S, replace contaminated sensor and go to next step.
3. Warm up the engine to normal operating temperature and check that HO2S signal is active.
4. Connect Scantool and monitor the Front HO2S parameter on the Scantool data list.

Specification : Verify signal is switching from rich(above 0.45V) to lean(below 0.45V) a minimum of 3 times in 10 seconds (voltage will vary between 0.1 and 0.9V).

5. Is sensor switching properly?

YES

▶ Check for poor connection between ECM and component: backed out terminal, improper mating, broken locks or poor terminal to wire connection. Repair as necessary and go to "Verification of Vehicle Repair" procedure

NO

▶ Check HO2S for contamination, deterioration, or damage. Substitute with a known-good HO2S and check for proper operation. If the problem is corrected, replace HO2S and then go to "Verification of Vehicle Repair" procedure

VERIFICATION OF VEHICLE REPAIR E7DE2F60

After a repair, it is essential to verify that the fault has been corrected.

1. Connect scan tool and select "Diagnostic Trouble Codes(DTCs)" mode
2. Press F4(DTAL) and confirm that "DTC Readiness Flag" indicates "Complete". If not, drive the vehicle within conditions noted in the freeze frame data or enable conditions
3. Read "DTC Status" parameter
4. Is parameter displayed "History(Not Present) fault"?

YES

▶ System performing to specification at this time. Clear the DTC.

NO

▶ Go to the applicable troubleshooting procedure.

DTC P0131 HO2S CIRCUIT LOW VOLTAGE (BANK 1 / SENSOR 1)

COMPONENT LOCATION E7511E63

Refer to DTC P0130.

GENERAL DESCRIPTION EBC9BAFB

Refer to DTC P0130.

DTC DESCRIPTION EEDEB0E7

ECM sets DTC P0131 if the ECM detects that the front HO2S signal circuit is short to ground

DTC DETECTING CONDITION E8CA668D

Item	Detecting Condition	Possible Cause
DTC Strategy	• Electrical Check	• Short to ground in signal harness • Contact resistance in connectors • Faulty Heated O2 Sensor(HO2S)
Enable Conditions	• Ignition "ON" • Lambda close loop activated • No canister purge solenoid error • No down O2 sensor error • Air mass flow(Kg/h) 〉 7.7 • Time after close loop control activating 〉 10sec. • Canister purge valve closed or inactive	
Threshold Value	• Front HO2S < 0,02V & HO2S Internal resistance < 150Ω & Rear HO2S 〉 0.449V	
Diagnostic Time	• 1sec.	

SCHEMATIC DIAGRAM E12DCAE3

Refer to DTC P0130.

SIGNAL WAVEFORM AND DATA E3F7BAFC

Refer to DTC P0130.

MONITOR DTC STATUS EE8F88B6

Refer to DTC P0130.

TERMINAL AND CONNECTOR INSPECTION EFCDD0D9

1. Many malfunctions in the electrical system are caused by poor harness(es) and terminals. Faults can also be caused by interference from other electrical systems, and mechanical or chemical damage.

2. Thoroughly check connectors for looseness, poor connection, bending, corrosion, contamination, deterioration, or damage.

3. Has a problem been found?

YES

▶ Repair as necessary and go to "Verification of Vehicle Repair" procedure

NO

▶ Go to "Signal Circuit Inspection" procedure

SIGNAL CIRCUIT INSPECTION E6DE440A

1. Ignition "OFF"
2. Disconnect HO2S connector.
3. Measure resistance between terminal 1 fo the sensor harness connector and chassis ground.

Specification:	Infinite

4. Is resistance within the specification?

YES

▶ Go to "Component Inspection" procedure.

NO

▶ Repair open or short to ground in signal circuit and go to "Verification of Vehicle Repair"

COMPONENT INSECTION EFA6D6F1

Refer to DTC P0130.

VERIFICATION OF VEHICLE REPAIR EC6DE8FE

Refer to DTC P0130.

DTC P0132 HO2S CIRCUIT HIGH VOLTAGE (BANK 1 / SENSOR 1)

COMPONENT LOCATION E5DCE9CF

Refer to DTC P0130.

GENERAL DESCRIPTION EBCEDB55

Refer to DTC P0130.

DTC DESCRIPTION EBD6EE0E

ECM sets DTC P0132 if the ECM detects that the front HO2S signal circuit is short to battery

DTC DETECTING CONDITION EF87BD7E

Item	Detecting Condition	Possible Cause
DTC Strategy	• Electrical Check	• Short to Battery in signal harness • Contact resistance in connectors • Faulty Heated O2 Sensor(HO2S)
Enable Conditions	• Ignition "ON"	
Threshold Value	• HO2S 〉 4.6V	
Diagnostic Time	• 1sec.	

SCHEMATIC DIAGRAM ED44ECB4

Refer to DTC P0130.

SIGNAL WAVEFORM AND DATA EF5D796D

Refer to DTC P0130.

MONITOR DTC STATUS E5B9EB0C

Refer to DTC P0130.

TERMINAL AND CONNECTOR INSPECTION ED140EDB

1. Many malfunctions in the electrical system are caused by poor harness(es) and terminals. Faults can also be caused by interference from other electrical systems, and mechanical or chemical damage.
2. Thoroughly check connectors for looseness, poor connection, bending, corrosion, contamination, deterioration, or damage.
3. Has a problem been found?

YES

▶ Repair as necessary and go to "Verification of Vehicle Repair" procedure

NO

▶ Go to "Signal Circuit Inspection" procedure

SIGNAL CIRCUIT INSPECTION E15E1F60

1. Ignition "OFF"
2. Disconnect HO2S connector.
3. Ignition "ON" & Engine "OFF".
4. Measure resistance between terminal 1 fo the sensor harness connector and chassis ground.

Specification : Approx. 0.4~0.5V

5. Is voltage within the specification?

YES

▶ Go to "Component Inspection" procedure.

NO

▶ Repair as necessary and go to "Verification of Vehicle Repair" procedure

COMPONENT INSECTION EB4ED1A4

Refer to DTC P0130.

VERIFICATION OF VEHICLE REPAIR E09EE1B0

Refer to DTC P0130.

DTC P0133 HO2S CIRCUIT SLOW RESPONSE (BANK 1 / SENSOR 1)

COMPONENT LOCATION EDAAB55C

Refer to DTC P0130.

GENERAL DESCRIPTION E2424DCC

Refer to DTC P0130.

DTC DESCRIPTION EDC26DAC

The ECM monitors front oxygen sensor amplitude level and compares it to predetermined minimum amplitude value which could increase emission or disturb lambda control by the effect of aging on the oxygen sensor. The ECM sets DTC P0133 when the amplitude of oxygen sensor is equal to or less than minimum amplitude threshold.

DTC DETECTING CONDITION E33E2D2C

Item	Detecting Condition	Possible Cause
DTC Strategy	• Check Lambda Signal Amplitude	• Leak in intake or exhaust system • Faulty fuel system. • Front and rear HO2S connections reversed. • Contact resistance in connectors • HO2S contamination
Enable Conditions	• 11V < Battery voltage • Stable driving condition • Lambda regulation active • Canister Purge Valve not in CLOSE state	
Threshold Value	• Average Ratio between measured and maximum allowed signal amplitude 〉 threshold	
Diagnostic Time		

SIGNAL WAVEFORM EFAFCEBE

Refer to DTC P0130.

SIGNAL WAVEFORM AND DATA E9AB15BB

Refer to DTC P0130.

MONITOR DTC STATUS EDEB2FF6

NOTE

If any misfire, Purge Solenoid Valve, Mass Air Flow Sensor or O2 Sensor heater codes are present, DO ALL REPAIRS associated with those codes before proceeding with this troubleshooting tree.

1. Connect scan tool and select "Diagnostic Trouble Codes(DTCs)" mode
2. Press F4(DTAL) to select DTC information from the DTCs menu
3. Confirm that "DTC Readiness Flag" indicates "Complete". If not, drive the vehicle within conditions noted in the freeze frame data or enable conditions
4. Read "DTC Status" parameter

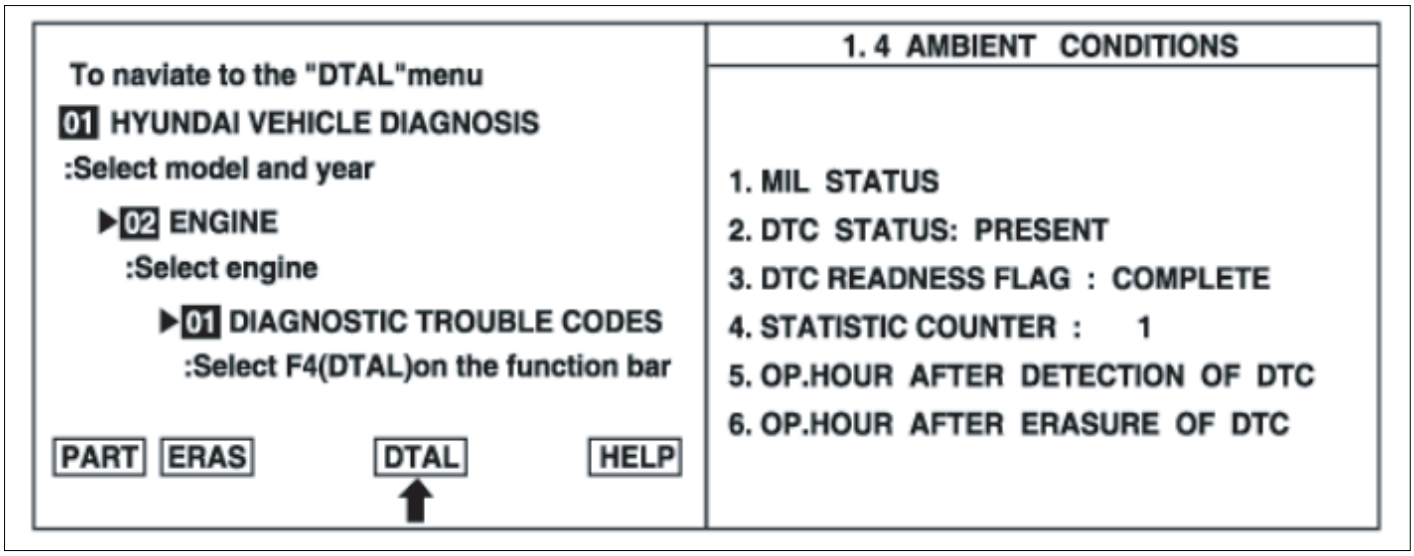

EFRF200D

5. Is parameter displayed "History(Not Present) fault"?

NOTE

- *History (Not Present) fault : DTC occurred but has been cleared.*
- *Present fault : DTC is occurring at present time.*

YES

▶ Fault is intermittent caused by poor contact in the sensor's and/or the ECM's connector, which was repaired but ECM memory was not cleared. Thoroughly check connectors for looseness, poor connection, bending, corrosion, contamination, deterioration, or damage. Repair or replace as necessary and go to "Verification of Vehicle Repair" procedure

NO

▶ Go to next step as below

VISUAL / PHYSICAL INSPECTION E93A4A85

1. Visually/physically inspect the following items:
   - Ensure that the HO2S is securely installed.
   - Check for corrosion on terminals
   - Check for terminal tension (at the HO2S and at the ECM)
   - Check for damaged wiring
   - Check the HO2S ground circuit for a good connection

2. Check front and rear HO2S for connections being reversed. If HO2S connections reversed, switch connections properly.

3. Was a problem found in any of the above areas?

YES

▶ Repair as necessary and go to "Verification of Vehicle Repair" procedure

NO

▶ Go to "Air Leakage Inspection" procedure

AIR LEAKAGE INSPECTION EF8F0F93

1. Visually/physically inspect the following items:
   - Vacuum hoses for splits, kinks and improper connections.
   - Exhaust system between HO2S and Three way catalyst for air leakage
   - EVAP system for leakage
   - PCV hose for proper installation

2. Was a problem found in any of the above areas?

YES

▶ Repair as necessary and go to "Verification of Vehicle Repair" procedure

NO

▶ Go to "Fuel Pressure Inspection" procedure

FUEL PRESSURE INSPECTION

1. Check the fuel for excessive water, alcohol, or other contaminants. Replace contaminated fuel as necessary.

2. Install a fuel pressure gage

3. Inspect fuel pressure with engine idling at normal operating temperature.

Test Condition : Ignition "ON" & Engine "ON" at Idle Specification : Approx. 350kPa(3.50 kg/㎠, 50 psi)

4. Is the fuel pressure within the specified value?

YES

▶ Go to "Fuel Injector Inspection" procedure as below

NO

▶ Repair as necessary refer to inspection note as below and go to "Verification of Vehicle Repair" procedure

FUEL INJECTOR INSPECTION

1. Ignition "OFF"

2. Check the fuel injectors for clogging or any restrictions

Specification : No clogging and restriction

3. Is the fuel injector OK?

YES

▶ Go to "Component Inspection" procedure

NO

▶ Repair as necessary and go to "Verification of Vehicle Repair" procedure

COMPONENT INSECTION E1B6FD79

Refer to DTC P0130.

VERIFICATION OF VEHICLE REPAIR ECFCF81E

Refer to DTC P0130.

DTC P0134 HO2S CIRCUIT NO ACTIVITY DETECTED (BANK 1 / SENSOR 1)

COMPONENT LOCATION E3EEF40D

Refer to DTC P0130.

GENERAL DESCRIPTION E8D6F675

Refer to DTC P0130.

DTC DESCRIPTION E7CF7A50

Due to possible oxygen sensor defects (e.g. reference air poisoning) or faults in the injection system (e.g. leaking fuel injector), the rear oxygen sensor may not provide the expected lean or rich signal level during fuel cut-off or full load condition. Hence, the oxygen sensor signal is checked for plausibility during this engine operating states.

DTC DETECTING CONDITION EB66DDC4

Item	Detecting Condition	Possible Cause
DTC Strategy	• Plausibility check	• Related fuse blown or missing • Contact resistance in connectors • HO2S contamination
Enable Conditions	• In fuel cut mode • O2 sensor heater close loop control • No relevant failure • Exhaust gas temperature 〉 350°C(662°F)	
Threshold Value	• HO2S voltage at fuel-cut mode 〉 0.1V	
Diagnostic Time		

SCHEMATIC DIAGRAM E97F82B3

Refer to DTC P0130.

SIGNAL WAVEFORM AND DATA E7A7A928

Refer to DTC P0130.

MONITOR DTC STATUS E9B0ABD7

NOTE

If any misfire, Purge Solenoid Valve, Mass Air Flow Sensor or O2 Sensor heater codes are present, DO ALL REPAIRS associated with those codes before proceeding with this troubleshooting tree.

1. Connect scan tool and select "Diagnostic Trouble Codes(DTCs)" mode
2. Press F4(DTAL) to select DTC information from the DTCs menu
3. Confirm that "DTC Readiness Flag" indicates "Complete". If not, drive the vehicle within conditions noted in the freeze frame data or enable conditions
4. Read "DTC Status" parameter

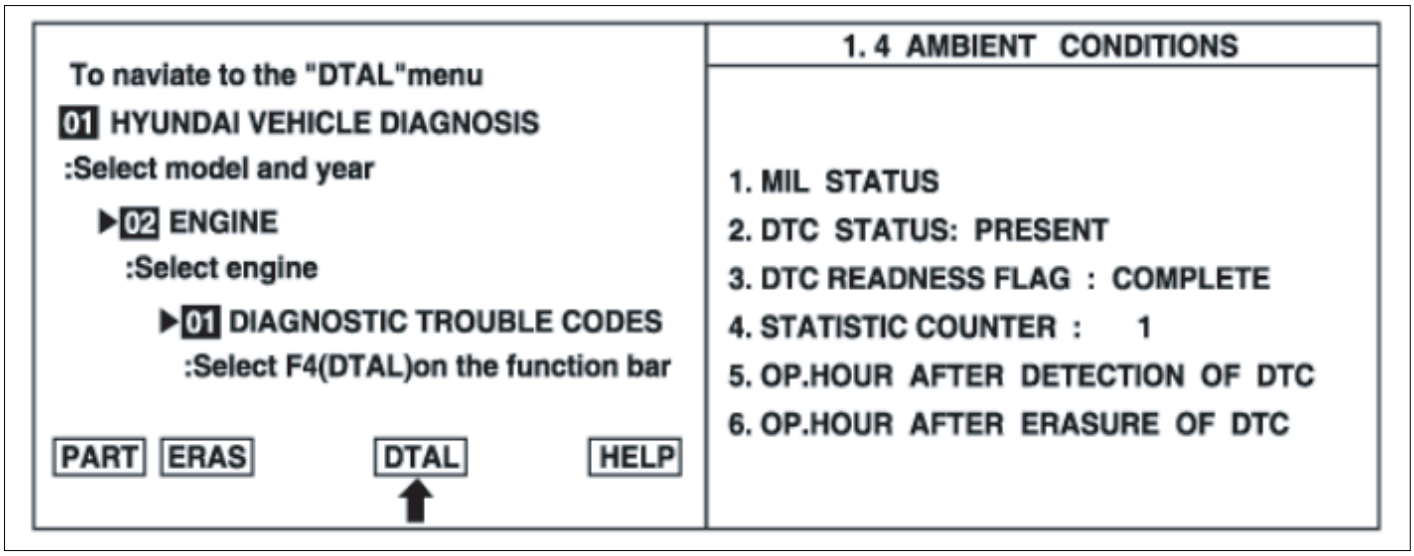

EFRF200D

5. Is parameter displayed "History(Not Present) fault"?

NOTE

- *History (Not Present) fault : DTC occurred but has been cleared.*
- *Present fault : DTC is occurring at present time.*

YES

▶ Fault is intermittent caused by poor contact in the sensor's and/or ECM's connector or was repaired and ECM memory was not cleared. Thoroughly check connectors for loose or poor connection, bending, corrosion, contamination, deterioration, or damage. Repair or replace as necessary and go to "Verification of Vehicle Repair" procedure

NO

▶ Go to next step as below

TERMINAL AND CONNECTOR INSPECTION E004AAD0

1. Many malfunctions in the electrical system are caused by poor harness(es) and terminals. Faults can also be caused by interference from other electrical systems, and mechanical or chemical damage.

2. Thoroughly check connectors for looseness, poor connection, bending, corrosion, contamination, deterioration, or damage.

3. Has a problem been found?

YES

▶ Repair as necessary and go to "Verification of Vehicle Repair" procedure

NO

▶ Go to "HO2S Fuse Inspection" procedure

HO2S FUSE INSPECTION

1. Ignition "OFF" & Engine "OFF"

2. Verify "10A Sensor fuse" is installed and not blown.

3. If OK, go to "Component Inspection" procedure
   If NG, replace fuse and repair any shorts as necessary and go to "Verification of Vehicle Repair" procedure.

COMPONENT INSPECTION EBD2520B

Refer to DTC P0130.

VERIFICATION OF VEHICLE REPAIR E8D18BBC

Refer to DTC P0130.

DTC P0136 HO2S CIRCUIT (BANK 1/ SENSOR 2)

COMPONENT LOCATION E25E0AD9

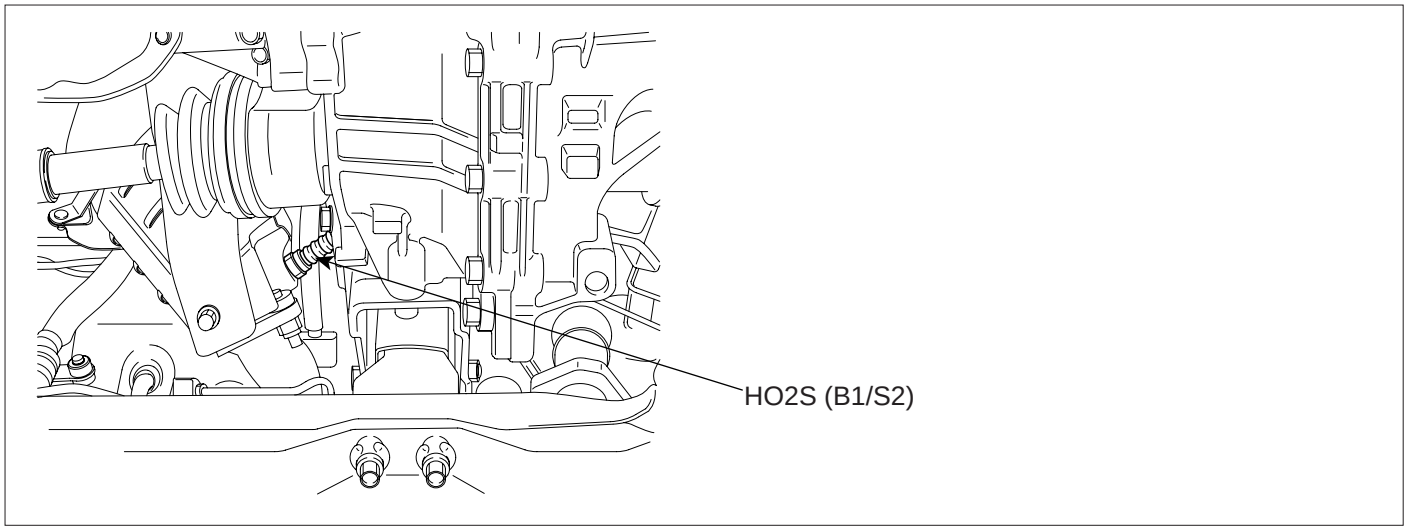

EFRF010A

GENERAL DESCRIPTION EB0F0F34

The rear heated oxygen sensor is mounted on the rear side of the Catalytic Converter (warm-up catalytic converter) or in the rear exhaust pipe, which is able to detect catalyst efficiency. The rear heated oxygen sensor (HO2S) produces a voltage between 0V and 1V. This rear heated oxygen sensor is used to estimate the oxygen storage capability. If a catalyst has good conversion properties, the oxygen fluctuations are smoothed by the oxygen storage capacity of the catalyst. If the conversion provided by the catalyst is low due to aging, poisoning or misfiring, then the oxygen fluctuations are similar to signals from the front oxygen sensor.

DTC DESCRIPTION E2ADEF8F

ECM sets DTC P0136 if the ECM detects that the rear HO2S signal circuit is open.

DTC DETECTING CONDITION E94DF99E

Item	Detecting Condition	Possible Cause
DTC Strategy	• Electrical Check	• Open in signal harness • Open in ground harness • Contact resistance in connectors • Faulty Heated O2 Sensor(HO2S)
Enable Conditions	• Ignition "ON" • O2 sensor heater close loop control • No HO2S heater error • Exhaust gas temperature 〉 600℃(1112°F) • Lambda close loop control activated	
Threshold Value	• Down HO2S internal resistance 〉 60kΩ	
Diagnostic Time	• 2sec.	

SCHEMATIC DIAGRAM E6ED998F

[Circuit Diagram]

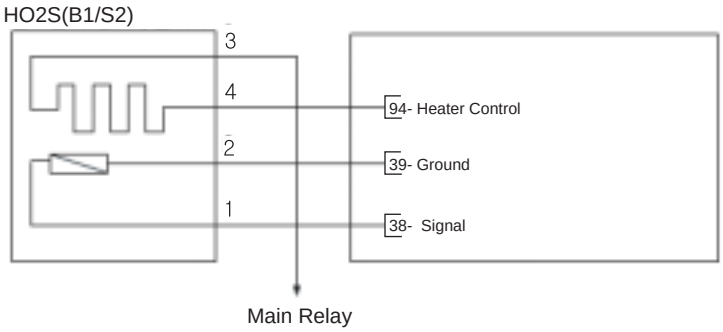

[Connection Information]

Terminal	Connected to	Function
1	ECM Terminal 38	Signal
2	ECM Terminal 39	Ground
3	Main Relay	Power
4	ECM Terminal 94	Heater Control

[Harness Connector]

C47

ECM

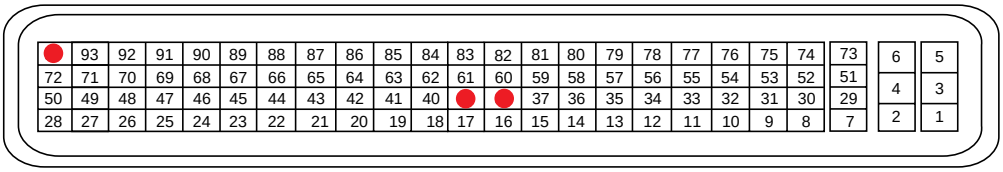

C44

EFRF300C

SIGNAL WAVEFORM AND DATA EE2C095B

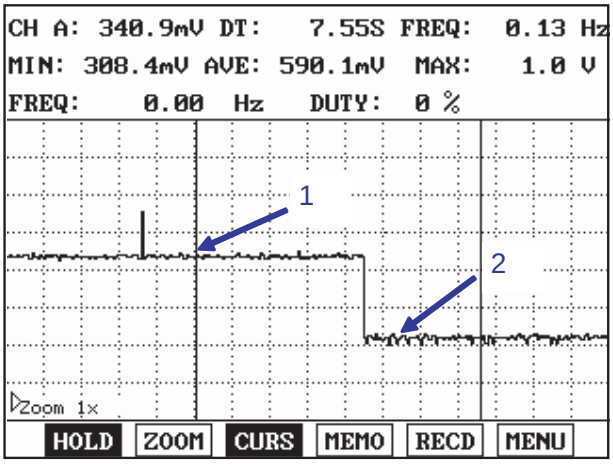

Fig.1

Fig.1) HO2S signal waveform with idle after warm up :
1: Normal status(Approx. above 0.6V), 2: Open in signal circuit(Approx. 0.4~0.5V)

EFRF200L

MONITOR DTC STATUS EC1DAE75

1. Connect scan tool and select "Diagnostic Trouble Codes(DTCs)" mode
2. Press F4(DTAL) to select DTC information from the DTCs menu

3. Confirm that "DTC Readiness Flag" indicates "Complete". If not, drive the vehicle within conditions noted in the freeze frame data or enable conditions

4. Read "DTC Status" parameter

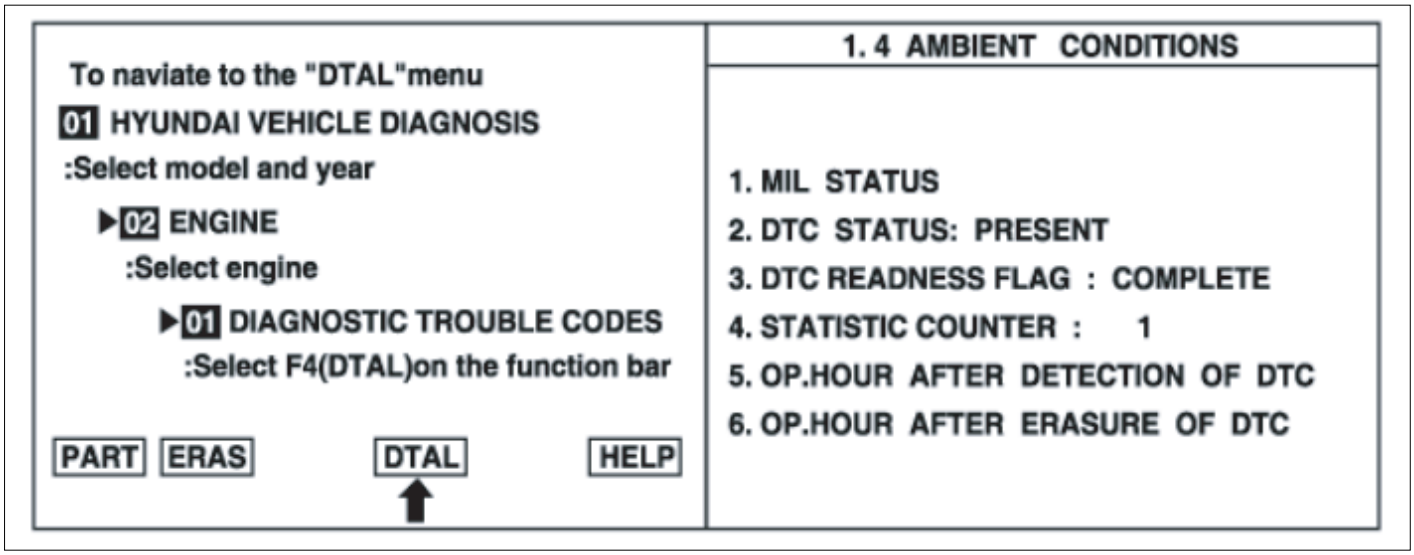

EFRF200D

5. Is parameter displayed "History(Not Present) fault"?

NOTE

- *History (Not Present) fault : DTC occurred but has been cleared.*
- *Present fault : DTC is occurring at present time.*

YES

▶ Fault is intermittent caused by poor contact in the sensor's and/or ECM's connector or was repaired and ECM memory was not cleared. Thoroughly check connectors for loose or poor connection, bending, corrosion, contamination, deterioration, or damage. Repair or replace as necessary and go to "Verification of Vehicle Repair" procedure

NO

▶ Go to next step as below

TERMINAL AND CONNECTOR INSPECTION EF6CBCE2

1. Many malfunctions in the electrical system are caused by poor harness(es) and terminals. Faults can also be caused by interference from other electrical systems, and mechanical or chemical damage.

2. Thoroughly check connectors for looseness, poor connection, bending, corrosion, contamination, deterioration, or damage.

3. Has a problem been found?

YES

▶ Repair as necessary and go to "Verification of Vehicle Repair" procedure

NO

▶ Go to "Ground Circuit Inspection" procedure

GROUND CIRCUIT INSPECTION ECAD6CCE

1. Ignition "OFF"
2. Disconnect HO2S connectors
3. Measure resistance between terminals 2 of the sensor harness connector and chassis ground

Specification : Approx. 0Ω

4. Is resistance within the specification?

YES

▶ Go to "Signal circuit inspection" procedure

NO

▶ Repair open in the signal circuit and go to "Verification of Vehicle Repair" procedure

SIGNAL CIRCUIT INSPECTION E5C9A2EB

1. Ignition "ON" & Engine "OFF"
2. Measure voltage between terminal 1 of the sensor harness connector and chassis ground

Specification : Approx. 0.7~0.8V

3. Is voltage within the specification?

YES

▶ Go to "Component Inspection" procedure

NO

▶ Repair open in the signal circuit and go to "Verification of Vehicle Repair" procedure

COMPONENT INSPECTION E67DA3FA

1. With ignition "OFF", reconnect the HO2S connector
2. Warm up the engine to normal operating temperature and check that HO2S signal is active.
3. Connect Scantool and monitor the Rear HO2S parameter on the Scantool data list.

Specification : Above 0.6V

4. Is sensor data near the specified value?

YES

▶ Check for poor connection between ECM and component: backed out terminal, improper mating, broken locks or poor terminal to wire connection. Repair as necessary and go to "Verification of Vehicle Repair" procedure

NO

▶ Check HO2S for contamination, deterioration, or damage. Substitute with a known-good HO2S and check for proper operation. If the problem is corrected, replace HO2S and then go to "Verification of Vehicle Repair" procedure

VERIFICATION OF VEHICLE REPAIR E629955A

After a repair, it is essential to verify that the fault has been corrected.

1. Connect scan tool and select "Diagnostic Trouble Codes(DTCs)" mode
2. Press F4(DTAL) and confirm that "DTC Readiness Flag" indicates "Complete". If not, drive the vehicle within conditions noted in the freeze frame data or enable conditions
3. Read "DTC Status" parameter
4. Is parameter displayed "History(Not Present) fault"?

YES

▶ System performing to specification at this time. Clear the DTC

NO

▶ Go to the applicable troubleshooting procedure.

DTC P0137 HO2S CIRCUIT LOW VOLTAGE (BANK 1 / SENSOR 2)

COMPONENT LOCATION E10FB703

Refer to DTC P0136.

GENERAL DESCRIPTION E4078546

Refer to DTC P0136.

DTC DESCRIPTION EEB7A3FE

ECM sets DTC P0137 if the ECM detects signal voltage lower than the possible range of a properly operating rear heated oxygen sensor (HO2S).

DTC DETECTING CONDITION E401E3E5

Item	Detecting Condition	Possible Cause
DTC Strategy	• Electrical Check	• Short to ground in signal harness • Contact resistance in connectors • Faulty Heated O2 Sensor(HO2S)
Enable Conditions	• In close loop mode • Air mass flow(Kg/h) 〉 7.7kg/h	
Threshold Value	• HO2S < 0.02V & Internal resistance < 15Ω	
Diagnostic Time	• 2sec.	

SCHEMATIC DIAGRAM E9EFD001

Refer to DTC P0136.

SIGNAL WAVEFORM AND DATA E011255E

Refer to DTC P0136.

MONITOR DTC STATUS E0800EF1

Refer to DTC P0136.

TERMINAL AND CONNECTOR INSPECTION E8C30D33

1. Many malfunctions in the electrical system are caused by poor harness(es) and terminals. Faults can also be caused by interference from other electrical systems, and mechanical or chemical damage.
2. Thoroughly check connectors for looseness, poor connection, bending, corrosion, contamination, deterioration, or damage.
3. Has a problem been found?

YES

▶ Repair as necessary and go to "Verification of Vehicle Repair" procedure

NO

▶ Go to "Signal Circuit Inspection" procedure

SIGNAL CIRCUIT INSPECTION EE6EA99C

1. Ignition "OFF"
2. Disconnect HO2S connector
3. Measure resistance between terminal 1 of the sensor harness connector and chassis ground

Specification : Infinite

4. Is resistance within the specification?

YES

▶ Go to "Component Inspection" procedure

NO

▶ Repair open or short to ground in signal circuit and go to "Verification of Vehicle Repair" procedure

COMPONENT INSPECTION EBCB127B

Refer to DTC P0136.

VERIFICATION OF VEHICLE REPAIR E48F988D

Refer to DTC P0136.

DTC P0138 HO2S CIRCUIT HIGH VOLTAGE (BANK 1 / SENSOR 2)

COMPONENT LOCATION EFDE0D82

Refer to DTC P0136.

GENERAL DESCRIPTION E867FD17

Refer to DTC P0136.

DTC DESCRIPTION EFA7E853

ECM sets DTC P0138 if the ECM detects signal voltage higher than the possible range of a properly operating rear heated oxygen sensor (HO2S).

DTC DETECTING CONDITION ECE3A93C

Item	Detecting Condition	Possible Cause
DTC Strategy	• Electrical Check	• Short to Battery in signal harness • Contact resistance in connectors • Faulty Heated O2 Sensor(HO2S)
Enable Conditions	• Ignition "ON"	
Threshold Value	• HO2S 〉 4.6V	
Diagnostic Time	• 1sec.	

SCHEMATIC DIAGRAM ECC9E3B0

Refer to DTC P0136.

SIGNAL WAVEFORM AND DATA EDAC4AD3

Refer to DTC P0136.

MONITOR DTC STATUS E121BBB2

Refer to DTC P0136.

TERMINAL AND CONNECTOR INSPECTION E41C3FAF

1. Many malfunctions in the electrical system are caused by poor harness(es) and terminals. Faults can also be caused by interference from other electrical systems, and mechanical or chemical damage.
2. Thoroughly check connectors for looseness, poor connection, bending, corrosion, contamination, deterioration, or damage.
3. Has a problem been found?

YES

▶ Repair as necessary and go to "Verification of Vehicle Repair" procedure

NO

▶ Go to "Component Inspection" procedure

SIGNAL CIRCUIT INSPECTION E006120D

1. Ignition "OFF"
2. Disconnect HO2S connector
3. Ignition "ON"
4. Measure voltage between terminal 1 of the sensor harness connector and chassis ground

Specification : Approx. 0.7~0.8V

5. Is voltage within the specification?

YES

▶ Go to "Component Inspection" procedure

NO

▶ Repair as necessary and go to "Verification of Vehicle Repair" procedure

COMPONENT INSPECTION E819A8A9

Refer to DTC P0136.

VERIFICATION OF VEHICLE REPAIR ECFBCCE0

Refer to DTC P0136.

DTC P0139 HO2S CIRCUIT SLOW RESPONSE (BANK 1 / SENSOR 2)

COMPONENT LOCATION EC6ED533

Refer to DTC P0136.

GENERAL DESCRIPTION E9606B1B

Refer to DTC P0136.

DTC DESCRIPTION EB701733

The ECM monitors rich-lean switching time of rear heated oxygen sensor (HO2S) after fuel cut-off to validate dynamic behavior of rear heated oxygen sensor (HO2S). After detection of fuel cut-off engine operating state, the ECM measures rich-lean switching time of the rear heated oxygen sensor (HO2S) signal and compares it to the predetermined limit value. DTC P0139 is set when the switching time is bigger than the limit value.

DTC DETECTING CONDITION EC179343

Item	Detecting Condition	Possible Cause
DTC Strategy	• Slow response(Switching time check at entry in fuel cut off)	• Leak in intake or exhaust system • Faulty fuel system. • Front and rear HO2S connections reversed. • Contact resistance in connectors • HO2S contamination
Enable Conditions	• Coolant temp 〉 74℃(165°F) • Closed loop mode • 5km/h(3mph) 〈 Vehicle speed 〈 180km/h(112mph) • Sensor preheating and full phase finished • Catalyst temp.model 〉 350℃(662°F) • No relevant failure • 11 〈 Battery voltage 〈 16 • Downstream O2 sensor signal at entry in fuel cut off 〉 0.55V	
Threshold Value	• Average ratio(between measured and maximum allowed switching time at entry in fuel cut-off) 〉 1	
Diagnostic Time	• 5 fuel cut-off phases	

SCHEMATIC DIAGRAM E155FE21

Refer to DTC P0136.

SIGNAL WAVEFORM AND DATA E12F89ED

Refer to DTC P0136.

MONITOR DTC STATUS E42C8E7D

NOTE

If any misfire, Purge Solenoid Valve, Mass Air Flow Sensor or O2 Sensor heater codes are present, DO ALL REPAIRS associated with those codes before proceeding with this troubleshooting tree.

1. Connect scan tool and select "Diagnostic Trouble Codes(DTCs)" mode

2. Press F4(DTAL) to select DTC information from the DTCs menu

3. Confirm that "DTC Readiness Flag" indicates "Complete". If not, drive the vehicle within conditions noted in the freeze frame data or enable conditions

4. Read "DTC Status" parameter

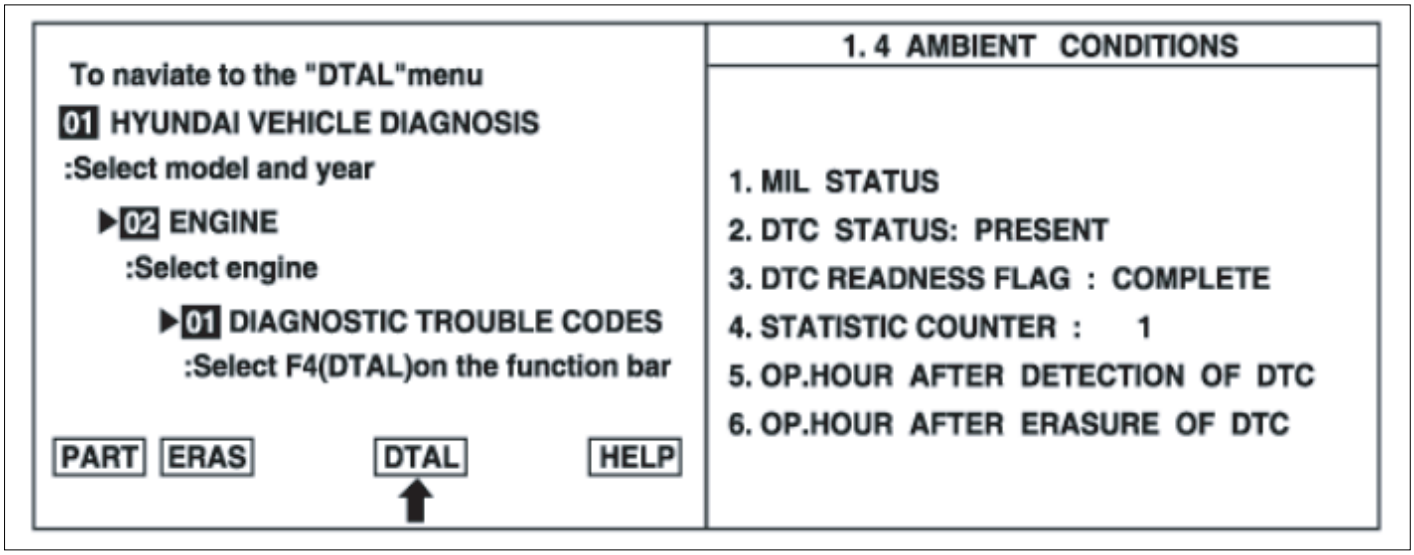

EFRF200D

5. Is parameter displayed "History(Not Present) fault"?

NOTE

- *History (Not Present) fault : DTC occurred but has been cleared.*
- *Present fault : DTC is occurring at present time.*

YES

▶ Fault is intermittent caused by poor contact in the sensor's and/or ECM's connector or was repaired and ECM memory was not cleared. Thoroughly check connectors for loose or poor connection, bending, corrosion, contamination, deterioration, or damage. Repair or replace as necessary and go to "Verification of Vehicle Repair" procedure

NO

▶ Go to next step as below

VISUAL / PHYSICAL INSPECTION EA73B159

1. Visually/physically inspect the following items:
   - Ensure that the HO2S is securely installed.
   - Check for corrosion on terminals
   - Check for terminal tension (at the HO2S and at the ECM)
   - Check for damaged wiring
   - Check the HO2S ground circuit for a good connection

2. Check front and rear HO2S for connections being reversed. If HO2S connections reversed, switch connections properly.

3. Was a problem found in any of the above areas?

YES

▶ Repair as necessary and go to "Verification of Vehicle Repair" procedure

NO

▶ Go to "Exhaust System Inspection" procedure

EXHAUST SYSTEM INSPECTION EAB5CDEA

1. Check the exhaust system for an exhaust leak near the engine.
2. Was an exhaust leak found?

YES

▶ Repair as necessary and go to "Verification of Vehicle Repair" procedure

NO

▶ Go to "Air Leakage Inspection " procedure

AIR LEAKAGE INSPECTION E3B3CB9F

1. Visually/physically inspect the following items:
   - Vacuum hoses for splits, kinks and improper connections.
   - Exhaust system between HO2S and Three way catalyst for air leakage
   - EVAP system for leakage
   - PCV hose for proper installation
2. Was a problem found in any of the above areas?

YES

▶ Repair as necessary and go to "Verification of Vehicle Repair" procedure

NO

▶ Go to "Fuel Pressure Inspection" procedure

FUEL PRESSURE INSPECTION

1. Check the fuel for excessive water, alcohol, or other contaminants. Replace contaminated fuel as necessary.
2. Install a fuel pressure gage
3. Inspect fuel pressure with engine idling at normal operating temperature.

Test Condition : Ignition "ON" & Engine "ON" Specification : 350kPa(3.50 kg/㎠, 50 psi)

4. Is the fuel pressure within the specified value?

YES

▶ Go to "Fuel Injector Inspection" procedure as below

NO

▶ Repair as necessary refer to inspection note as below and go to "Verification of Vehicle Repair" procedure

FUEL INJECTOR INSPECTION

1. Ignition "OFF"
2. Check the fuel injectors for clogging or any restrictions

Specification : No clogging and restriction

3. Is the fuel injector OK?

YES

▶ Go to "Component Inspection" procedure

NO

▶ Repair as necessary and go to "Verification of Vehicle Repair" procedure

COMPONENT INSPECTION EF01A8FA

1. Visually/physically inspect following items:
   - Ensure that the sensor is securely installed
   - Check for corrosion on terminals
   - Check for damaged wiring

   Repair as necessary and go to next step
2. Warm up the engine to normal operating temperature and check that HO2S signal is active.
3. Connect Scantool and monitor the Rear HO2S parameter on the Scantool data list.

Test Condition : Ignition "ON" & Engine "ON" & In Idle("Closed Loop")condition Specification : Above 0.6V

4. Is sensor data near the specified value?

YES

▶ Check for poor connection between ECM and component: backed out terminal, improper mating, broken locks or poor terminal to wire connection. Repair as necessary and go to "Verification of Vehicle Repair" procedure

NO

▶ Check HO2S for contamination, deterioration, or damage. Substitute with a known-good HO2S and check for proper operation. If the problem is corrected, replace HO2S and then go to "Verification of Vehicle Repair" procedure

VERIFICATION OF VEHICLE REPAIR E1B20AF3

Refer to DTC P0136.

DTC P0140 HO2S CIRCUIT NO ACTIVITY DETECTED (BANK 1 / SENSOR 2)

COMPONENT LOCATION E6DB780E

Refer to DTC P0136.

GENERAL DESCRIPTION EDDA6FA6

Refer to DTC P0136.

DTC DESCRIPTION ED2DC929

Due to possible oxygen sensor defects (e.g. reference air poisoning) or faults in the injection system (e.g. leaking fuel injector), the rear oxygen sensor may not provide the expected lean or rich signal level during fuel cut-off or full load condition. Hence, the oxygen sensor signal is checked for plausibility during this engine operating states.
There are 2 cases which DTC P0140 sets.
(I) Signal monitoring during fuel cut-off: The ECM monitors rear O2 sensor signal level during fuel cut-off which normally shows near 0V and sets DTC P0140 when signal level is too high.
(II) Signal monitoring after fuel cut-off: The ECM monitors rear O2 sensor signal level for a certain time after leaving fuel cut-off and sets DTC P0140 when signal variation during checked period is too small.

DTC DETECTING CONDITION E3888C0C

Item	Detecting Condition	Possible Cause
DTC Strategy	• Signal Plausibility after Fuel Cut-off	• Related fuse blown or missing • Contact resistance in connectors • HO2S contamination
Enable Conditions	• Integrated engine load in fuel cut off 〉 18g • Integrated engine load after fuel cut off 〉 40g • Coolant temperature 〉 74℃(165°F) • In Closed loop mode • Catalyst temperature 〉 350℃(662°F) • 5km/h(3mph) 〈 Vehicle speed 〈 120km/h(75mph) • No relevant failure • 11V 〈 Battery voltage 〈 16V	
Threshold Value	• Signal increase 〈 0.01V	
Diagnostic Time	• 5 After Fuel Cut-Off phases	

SCHEMATIC DIAGRAM E2A82DD6

Refer to DTC P0136.

SIGNAL WAVEFORM AND DATA E5774468

Refer to DTC P0136.

MONITOR DTC STATUS EE6AF11D

NOTE

If any misfire, Purge Solenoid Valve, Mass Air Flow Sensor or O2 Sensor heater codes are present, DO ALL REPAIRS associated with those codes before proceeding with this troubleshooting tree.

1. Connect scan tool and select "Diagnostic Trouble Codes(DTCs)" mode

2. Press F4(DTAL) to select DTC information from the DTCs menu

3. Confirm that "DTC Readiness Flag" indicates "Complete". If not, drive the vehicle within conditions noted in the freeze frame data or enable conditions

4. Read "DTC Status" parameter

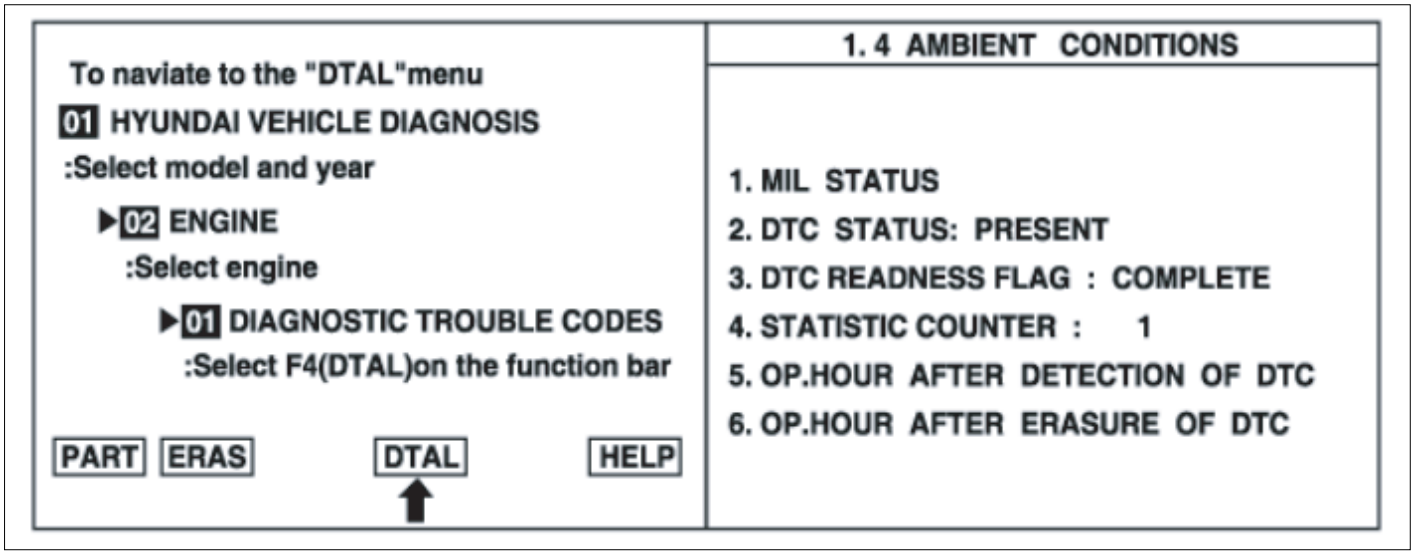

EFRF200D

5. Is parameter displayed "History(Not Present) fault"?

NOTE

- *History (Not Present) fault : DTC occurred but has been cleared.*
- *Present fault : DTC is occurring at present time.*

YES

▶ Fault is intermittent caused by poor contact in the sensor's and/or ECM's connector or was repaired and ECM memory was not cleared. Thoroughly check connectors for loose or poor connection, bending, corrosion, contamination, deterioration, or damage. Repair or replace as necessary and go to "Verification of Vehicle Repair" procedure

NO

▶ Go to next step as below

TERMINAL AND CONNECTOR INSPECTION EF88AAAB

1. Many malfunctions in the electrical system are caused by poor harness(es) and terminals. Faults can also be caused by interference from other electrical systems, and mechanical or chemical damage.

2. Thoroughly check connectors for looseness, poor connection, bending, corrosion, contamination, deterioration, or damage.

3. Has a problem been found?

YES

▶ Repair as necessary and go to "Verification of Vehicle Repair" procedure

NO

▶ Go to "HO2S Fuse Inspection" procedure

HO2S FUSE INSPECTION

1. Ignition "OFF" & Engine "OFF"

2. Verify "10A Sensor fuse" is installed and not blown.

3. If OK, go to "Component Inspection" procedure
   If NG, replace fuse and repair any shorts as necessary and go to "Verification of Vehicle Repair" procedure.

COMPONENT INSPECTION E213FCFA

1. Visually/physically inspect following items:
   - Ensure that the sensor is securely installed
   - Check for corrosion on terminals
   - Check for damaged wiring
     Repair as necessary and go to next step

2. Warm up the engine to normal operating temperature and check that HO2S signal is active.

3. Connect Scantool and monitor the Rear HO2S parameter on the Scantool data list.

Test Condition :	Ignition "ON" & Engine "ON" & In Idle("Closed Loop")condition
Specification :	Above 0.6V

4. Is sensor data near the specified value?

YES

▶ Check for poor connection between ECM and component: backed out terminal, improper mating, broken locks or poor terminal to wire connection. Repair as necessary and go to "Verification of Vehicle Repair" procedure

NO

▶ Check HO2S for contamination, deterioration, or damage. Substitute with a known-good HO2S and check for proper operation. If the problem is corrected, replace HO2S and then go to "Verification of Vehicle Repair" procedure

VERIFICATION OF VEHICLE REPAIR EF3B24A5

Refer to DTC P0136.

DTC P0170 FUEL TRIM (BANK 1)

GENERAL DESCRIPTION E0236FC1

In order to provide the best possible combination of drivability, fuel economy and emission control, the ECM uses a closed loop air/fuel metering system. The ECM monitors the HO2S signal voltage and adjusts fuel delivery based it in closed loop fuel control. Changes in fuel delivery will be indicated by the long-term and the short-term fuel trim values. The ideal fuel trim value is around 0%. The ECM will add fuel when the HO2S signal is indicating a lean condition. Additional fuel is indicated by fuel trim values that are above 0%. The ECM will reduce fuel when the HO2S signal is indicating a rich condition. Reduction in fuel is indicated by fuel trim values that are below 0%. The DTC relevant to fuel trim will be set when the amount reaches excessive levels because of a lean or rich condition.

DTC DESCRIPTION E8FCDF4F

If the lambda controller reaches the maximum or minimum threshold, then feedback control is no longer possible and emissions will be increased. The ECM sets DTC P0170 if no proportional fuel adaptation occurs for a defined time after the lambda controller has reached its minimum or maximum threshold.

DTC DETECTING CONDITION E9D0A0D0

Item	Detecting Condition	Possible Cause
DTC Strategy	• Monitoring deviation of lambda controller	• Air leakage or restriction in intake or exhaust system • Dirty engine oil or oil level too high • Front HO2S or MAFS contamination • Fuel system • EVAP system • Faulty sensor signals
Enable Conditions	• Lambda control active • Engine speed 〉 512rpm • Mass air flow 〉 0mg/stk • Ambient pressure 〉 0 • Intake manifold air temperature〉 -40℃(-40°F) • Canister loading • Coolant temperature〉 75℃(167°F)	
Threshold Value	• Lambda controller 〉 20% or -20% during 40sec.	
Diagnostic Time	• 40sec.	

MONITOR DTC STATUS E7BEDDEE

NOTE

If any codes relating to fuel system, injectors, HO2S, ECT(Engine Coolant Temperature)Sensor, Throttle Position sensor or Mass Air Flow Sensor are stored, do ALL REPAIRS associated with those codes before proceeding with this troubleshooting tree.

1. Connect scan tool and select "Diagnostic Trouble Codes(DTCs)" mode
2. Press F4(DTAL) to select DTC information from the DTCs menu
3. Confirm that "DTC Readiness Flag" indicates "Complete". If not, drive the vehicle within conditions noted in the freeze frame data or enable conditions
4. Read "DTC Status" parameter

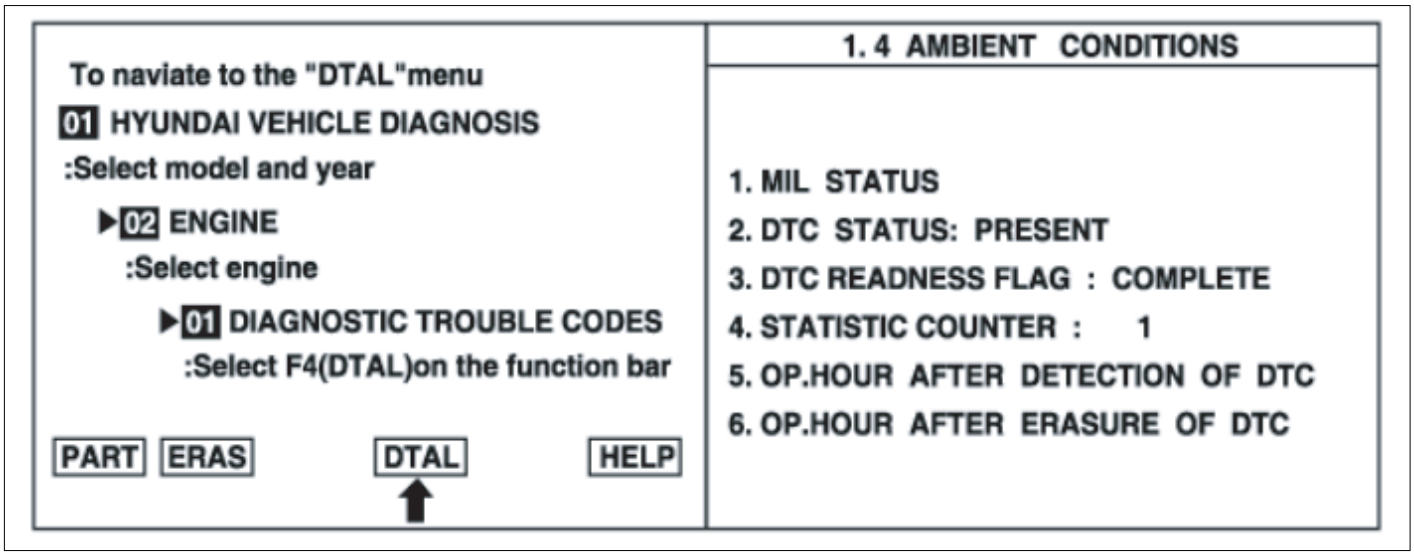

EFRF200D

5. Is parameter displayed "History(Not Present) fault"?

NOTE

- *History (Not Present) fault : DTC occurred but has been cleared.*
- *Present fault : DTC is occurring at present time.*

YES

▶ Fault is intermittent caused by poor contact in the sensor's and/or ECM's connector or was repaired and ECM memory was not cleared. Thoroughly check connectors for loose or poor connection, bending, corrosion, contamination, deterioration, or damage. Repair or replace as necessary and go to "Verification of Vehicle Repair" procedure

NO

▶ Go to next step as below

MONITOR ACTUATION TEST EDE23CBF

NOTE

The main purpose of this test is to identify potential engine mechanical condition problems and fuel and ignition systems problems that are not common to all cylinders. For best results, perform this test while maintaining as steady an rpm reading as possible.
Caution! Before beginning tests; set the parking brake, place gear selector in P or N and block drive wheels for safety.

1. Warm up the engine to normal operating temperature and let it idle.
2. Install Scan Tool and select INJECTOR #1 parameter on the Actuation Test mode
3. Monitor engine rpm and shut off the injector #1 by pressing "STRT(F1)" key
4. Repeat procedure on all injectors and record the engine rpm.

Specification : All cylinders should show an even RPM drop.

5. Was each cylinder's rpm drop within the same value?

YES

▶ Go to " Check intake/exhaust system for restriction or leakage " procedure

NO

▶ Cylinders with the least amount of RPM drop are not contributing their share of power. Go to "Fuel Injector Inspection" procedure and check the suspect cylindersNote) If the RPM loss between cylinders is quite large(200RPM or more) and engine has high mileage, there is possibility of engine wear. Perform compression test with pressure gauge to check the engine wear

CHECK INTAKE/EAHAUST SYSTEM FOR RESTRICTION OR LEAKAGE

1. Visually/physically inspect the air leakage in intake/exhaust system as following items
   - Vacuum hoses for splits, kinks and improper connections.
   - Throttle body gasket
   - Gasket between intake manifold and cylinder head
   - Seals between intake manifold and fuel injectors
   - Exhaust system between HO2S and Three way catalyst for air leakage

2. Visually/physically inspect the restriction in intake/exhaust system as following items,
   - Air cleaner filter element for excessive dirt or for any foreign objects
   - Throttle body inlet for damage or for any foreign objects
   - Throttle bore, throttle plate and the IAC passages for chocking and for any foreign objects
   - Restricted exhaust system

3. Was a problem found in any of the above areas?

YES

▶ Replace or repair as necessary and go to "Verification of Vehicle Repair" procedure

NO

▶ Go to " Check the engine oil contamination " procedure

CHECK THE ENGINE OIL CONTAMINATION

1. Check the engine oil level. The oil level should be between the min. and max. marking. Fill to the correct oil level
2. Warm up the engine to normal operating temperature
3. Connect Scantool and note the "SHORT TERM FUEL-B1" parameter on the Scantool data list.
4. Disconnect and plug the positive crankcase ventilation
5. Monitor the "SHORT TERM FUEL-B1" parameter on the Scantool data list once again.

Specification : The value should remain more or less unchanged

6. Is the displayed value within the specified value?

YES

▶ Go to "Sensor Contamination Inspection" procedure

NO

▶ The engine oil is diluted with fuel. Chang the oil and oil filter and go to "Verification of Vehicle Repair" procedure

SENSOR CONTAMINATION INSPECTION

1. Visually/physically inspect following items:
   - Remove and inspect the HO2S(B1S1) for any silicon contamination. This contamination will be indicated by a white powdery coating and this will result in a but false voltage signal
   - Check MAFS for contamination, deterioration, or damage.
   - If contamination is evident on the HO2S or MAFS, replace contaminated sensor and go to next step.

CHECK FOR LEAKAGE IN EVAP SYSTEM

1. Check the EVAP. EM system for possible over

   1) Remove the manifold side vacuum hose from the EVAP canister purge valve.

   2) Using a hand vacuum pump apply specified vacuum(Approx. 15 in, Hg) to the manifold side of the valve

   3) Does the valve hold vacuum?

   YES

   ▶ Go to "Fuel System Inspection" procedure

   NO

   ▶ Repair air leakage and go to "Verification of Vehicle Repair" procedure

FUEL SYSTEM INSPECTION E40A7629

1. Check the fuel for excessive water, alcohol, or other contaminants. Replace contaminated fuel as necessary.

2. Disconnect the vacuum hose from the fuel pressure regulator and inspect the hose for the presence of fuel. If any fuel is present in the vacuum hose, replace the fuel pressure regulator. Go to next step

3. Install a fuel pressure gage

4. Start engine and let it idle.

Specification : 350kPa(3.50 kg/㎠, 50 psi)

5. Is fuel pressure within the specified value?

   YES

   ▶ Go to "Fuel Injector Inspection" procedure as below

   NO

   ▶ Repair as necessary refer to inspection note as below and go to "Verification of Vehicle Repair" procedure

FUEL INJECTOR INSPECTION

1. Check the fuel injectors for clogging or any restrictions

Test Condition : Ignition "OFF"
Specification : No clogging and restriction

2. Is the fuel injector OK?

YES

▶ Visually/physically inspect the engine mechanical problem. Repair as necessary and go to "Verification of Vehicle Repair" procedure

NO

▶ Check injector for contamination, deterioration, or damage. Substitute with a known-good injector and check for proper operation. If the problem is corrected, replace injector and then go to "Verification of Vehicle Repair" procedure

VERIFICATION OF VEHICLE REPAIR EDA3066C

After a repair, it is essential to verify that the fault has been corrected.

1. Connect scan tool and select "Diagnostic Trouble Codes(DTCs)" mode
2. Press F4(DTAL) and confirm that "DTC Readiness Flag" indicates "Complete". If not, drive the vehicle within conditions noted in the freeze frame data or enable conditions
3. Read "DTC Status" parameter
4. Is parameter displayed "History(Not Present) fault"?

YES

▶ System performing to specification at this time. Clear the DTC

NO

▶ Go to the applicable troubleshooting procedure.

DTC P0196 ENGINE OIL TEMP. SENSOR RANGE / PERFORMANCE

COMPONENT LOCATION E16968ED

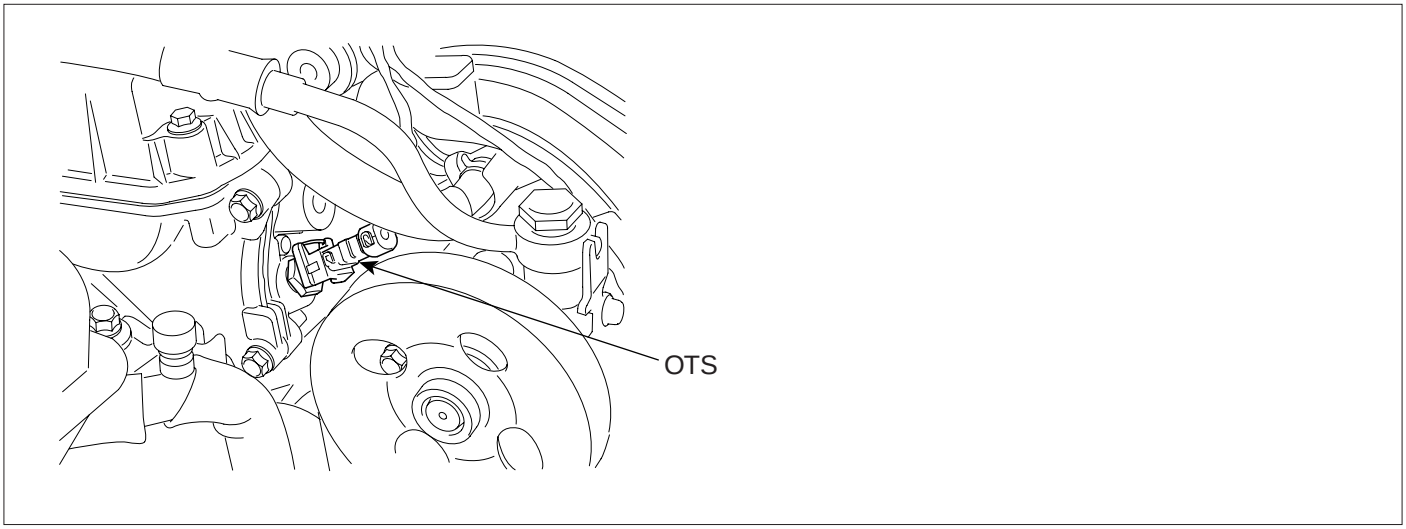

EFRF017A

GENERAL DESCRIPTION EDB89677

The fluid of the CVVT is the engine oil and its density changes according to the engine oil temperature. At this time the Oil Temperature Sensor (OTS) helps compensation against the temperature differences. The Oil Temperature Sensor measures the engine oil temperature before the engine oil comes into the Oil-flow Control Valve (OCV).
According to the measured temperature, the Engine Control Module (ECM) compensates the oil-flow control valve operation time.

DTC DESCRIPTION EDCBCF73

The purpose of this diagnosis is to detect a stuck oil temperature signal or implausibly low ,high signal. For the stuck signal detection, the ECM checks whether after a variation of the calculated oil temperature also a variation of the measured oil temperature is detected and sets DTC P0196 if the variation of the measured oil temperature is lower than the threshold. For the implausibly high, low signal detection, the ECM compares measured engine oil temperature with calculated oil temperature or coolant temperature and sets DTC P0196 when one of following conditions is met.

1. Measured oil temperature is implausibly low when calculated oil temperature is high.
2. Measured oil temperature is implausibly high when coolant is low without any relevant failure.

DTC DETECTING CONDITION E63AE3E5

Item		Detecting Condition	Possible Cause
DTC Strategy		• Plausibility check	• Contact resistance in connectors • Faulty OTS
Enable Conditions	Case1	• Engine running • No ECTS error • Coolant temp. at engine start 〈 39.8℃(103.6°F) • Modeled oil Temp. 〉 70℃(158°F)	
	Case2	• Engine running • No ECTS error • Coolant temp. 〈 69.8℃(157.6°F)	
	Case3	• Engine running • 6V 〈 Battery voltage • No ECTS error • Coolant Temp. at engine start 〈 39.8℃(103.6°F) • Difference between the highest and lowest modeled Oil Temp. 〉 Threshold • Substituted Coolant Temp. or Coolant Temp. 〉 83.3℃(181.9°F)	
Threshold Value	Case1	• Oil Temp. 〈 20℃°F	
	Case2	• Oil Temp. 〉 100℃°F	
	Case3	• Difference between the highest and lowest measured oil temp. 〉 Threshold	
Diagnostic Time	Case1	• 15sec.	
	Case2,3	• Immediately	

SPECIFICATION EBBB52A8

Temp.(℃)	Temp.(°F)	OTS Resistance(kΩ)	Temp.(℃)	Temp.(°F)	OTS Resistance(kΩ)
-20	-4	16.52	40	104	1.11
0	32	6.00	60	140	0.54
20	68	2.45	80	176	0.29

SCHEMATIC DIAGRAM E99C1BCF

[Circuit Diagram]

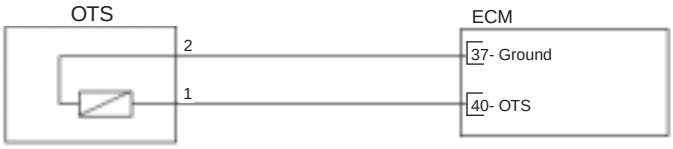

[Connection Information]

Terminal	Connected to	Funtion
1	ECM Terminal 40	OTS
2	ECM Terminal 37	Ground

[Harness Connector]

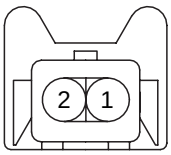

C35

ECM

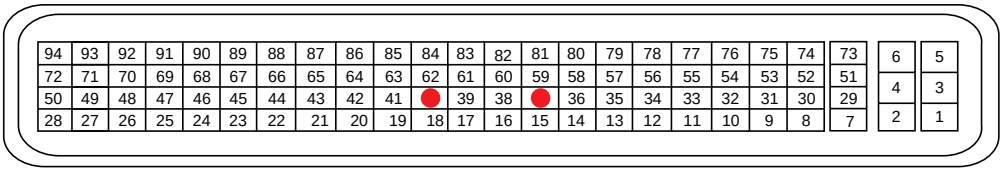

C44

EFRF300G

MONITOR DTC STATUS EC34BDC8

NOTE

If any codes relating to OTS are stored, do ALL REPAIRS associated with those codes before proceeding with further troubleshooting

1. Connect scan tool and select "Diagnostic Trouble Codes(DTCs)" mode
2. Press F4(DTAL) to select DTC information from the DTCs menu
3. Confirm that "DTC Readiness Flag" indicates "Complete". If not, drive the vehicle within conditions noted in the freeze frame data or enable conditions
4. Read "DTC Status" parameter

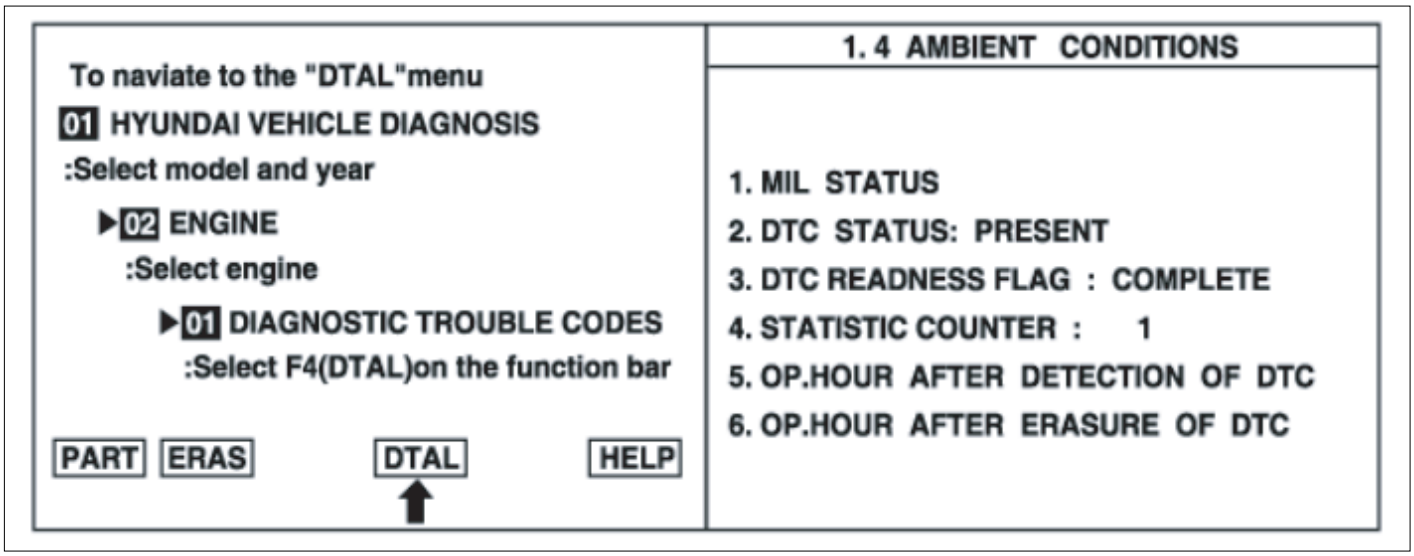

EFRF200D

5. Is parameter displayed "History(Not Present) fault"?

NOTE

- *History (Not Present) fault : DTC occurred but has been cleared.*
- *Present fault : DTC is occurring at present time.*

YES

▶ Fault is intermittent caused by poor contact in the sensor's and/or ECM's connector or was repaired and ECM memory was not cleared. Thoroughly check connectors for looseness, poor connection, bending, corrosion, contamination, deterioration, or damage. Repair or replace as necessary and then go to "Verification of Vehicle Repair" procedure.

NO

▶ Go to next step as below

TERMINAL AND CONNECTOR INSPECTION EC7B962F

1. Many malfunctions in the electrical system are caused by poor harness(es) and terminals. Faults can also be caused by interference from other electrical systems, and mechanical or chemical damage.

2. Thoroughly check connectors for looseness, poor connection, bending, corrosion, contamination, deterioration, or damage.

3. Has a problem been found?

YES

▶ Repair as necessary and go to "Verification of Vehicle Repair" procedure

NO

▶ Go to "Component Inspection" procedure

COMPONENT INSPECTION EB6D7D4D

1. Ignition "OFF"

2. Disconnect OTS connector.

3. Measure resistance between terminals 1 and 2 of OTS connector.(Component side)

SPECIFICATION

Temp.(°C)	Temp.(°F)	OTS Resistance(kΩ)	Temp.(°C)	Temp.(°F)	OTS Resistance(kΩ)
-20	-4	16.52	40	104	1.11
0	32	6.00	60	140	0.54
20	68	2.45	80	176	0.29

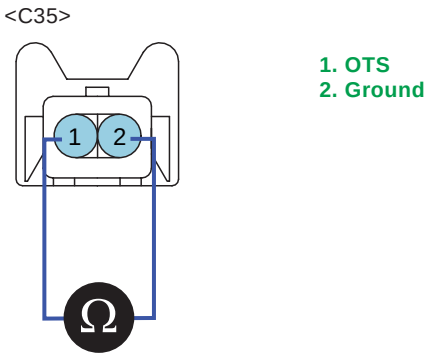

4. Is resistance within specification?

YES

▶ Check for poor connection between ECM and component: backed out terminal, improper mating, broken locks or poor terminal to wire connection. Repair as necessary and go to "Verification of Vehicle Repair" procedure

NO

▶ Check OTS for contamination, deterioration, or damage. Substitute with a known-good OTS and check for proper operation. If the problem is corrected, replace OTS and then go to "Verification of Vehicle Repair" procedure

VERIFICATION OF VEHICLE REPAIR EB04D637

After a repair, it is essential to verify that the fault has been corrected.

1. Connect scan tool and select "Diagnostic Trouble Codes(DTCs)" mode
2. Press F4(DTAL) and confirm that "DTC Readiness Flag" indicates "Complete". If not, drive the vehicle within conditions noted in the freeze frame data or enable conditions
3. Read "DTC Status" parameter
4. Is parameter displayed "History(Not Present) fault"?

YES

▶ System performing to specification at this time. Clear the DTC

NO

▶ Go to the applicable troubleshooting procedure.

DTC P0197 ENGINE OIL TEMP. SENSOR LOW INPUT

COMPONENT LOCATION E08253BB

Refer to DTC P0196.

GENERAL DESCRIPTION E5AFE8F3

Refer to DTC P0196.

DTC DESCRIPTION EEDC3467

ECM sets DTC P0197 if the ECM detects signal voltage lower than the possible range of a properly operating OTS.

DTC DETECTING CONDITION EEEC1B19

Item	Detecting Condition	Possible Cause
DTC Strategy	• Electrical Check	• Short circuit to ground • Contact resistance in connectors • Faulty OTS
Enable Conditions	• Ignition "ON" • 6V ≤ Battery voltage • No ECTS error • Coolant Temp. 〈 99.8℃(211.6°F)	
Threshold Value	• Oil Temp. 〉 153℃(307°F)	
Diagnostic Time	• 5sec.	

SPECIFICATION EA57FF6A

Refer to DTC P0196.

SCHEMATIC DIAGRAM E32D5AFB

Refer to DTC P0196.

MONITOR DTC STATUS ECA6E9B3

1. Connect scan tool and select "Diagnostic Trouble Codes(DTCs)" mode
2. Press F4(DTAL) to select DTC information from the DTCs menu
3. Confirm that "DTC Readiness Flag" indicates "Complete". If not, drive the vehicle within conditions noted in the freeze frame data or enable conditions
4. Read "DTC Status" parameter

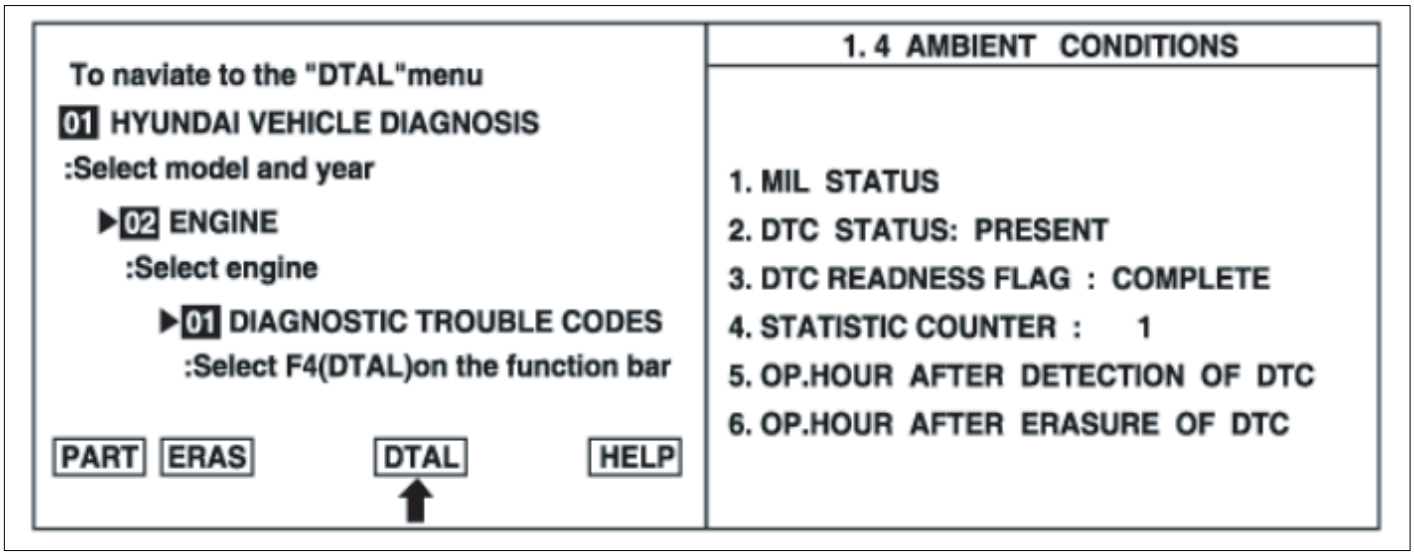

EFRF200D

5. Is parameter displayed "History(Not Present) fault"?

NOTE

- *History (Not Present) fault : DTC occurred but has been cleared.*
- *Present fault : DTC is occurring at present time.*

YES

▶ Fault is intermittent caused by poor contact in the sensor's and/or ECM's connector or was repaired and ECM memory was not cleared. Thoroughly check connectors for looseness, poor connection, bending, corrosion, contamination, deterioration, or damage. Repair or replace as necessary and then go to "Verification of Vehicle Repair" procedure.

NO

▶ Go to next step as below

SIGNAL CIRCUIT INSPECTION ECF95ADE

1. Ignition "OFF"

2. Disconnect OTS connector

3. Measure resistance between terminal 1 of the sensor harness connector and chassis ground

Specification : Infinite

4. Is resistance within the specification?

YES

▶ Go to "Terminal and Connector Inspection" procedure

NO

▶ Repair short to ground in harness and go to "Verification of Vehicle Repair" procedure

TERMINAL AND CONNECTOR INSPECTION ECD2DFBA

Refer to DTC P0196.

COMPONENT INSPECTION E22023A2

Refer to DTC P0196.

VERIFICATION OF VEHICLE REPAIR EA062E5C

Refer to DTC P0196.

DTC P0198 ENGINE OIL TEMP. SENSOR HIGH INPUT

COMPONENT LOCATION E7CFB667

Refer to DTC P0196.

GENERAL DESCRIPTION E5172DAE

Refer to DTC P0196.

DTC DESCRIPTION E400CC6D

ECM sets DTC P0198 if the ECM detects signal voltage higher than the possible range of a properly operating OTS.

DTC DETECTING CONDITION E1D8E3C8

Item	Detecting Condition	Possible Cause
DTC Strategy	• Electrical Check	• Open or short circuit to battery • Contact resistance in connectors • Faulty OTS
Enable Conditions	• Time after start 〉 300sec. • No ECTS error • Coolant Temp. 〉 -9°C(16°F)	
Threshold Value	• Oil Temp. 〈 -36°C(-33°F)	
Diagnostic Time	• 5sec.	

SPECIFICATION E16E98E4

Refer to DTC P0196.

SCHEMATIC DIAGRAM E9B62DA8

Refer to DTC P0196.

MONITOR DTC STATUS EA47AECA

1. Connect scan tool and select "Diagnostic Trouble Codes(DTCs)" mode
2. Press F4(DTAL) to select DTC information from the DTCs menu
3. Confirm that "DTC Readiness Flag" indicates "Complete". If not, drive the vehicle within conditions noted in the freeze frame data or enable conditions
4. Read "DTC Status" parameter

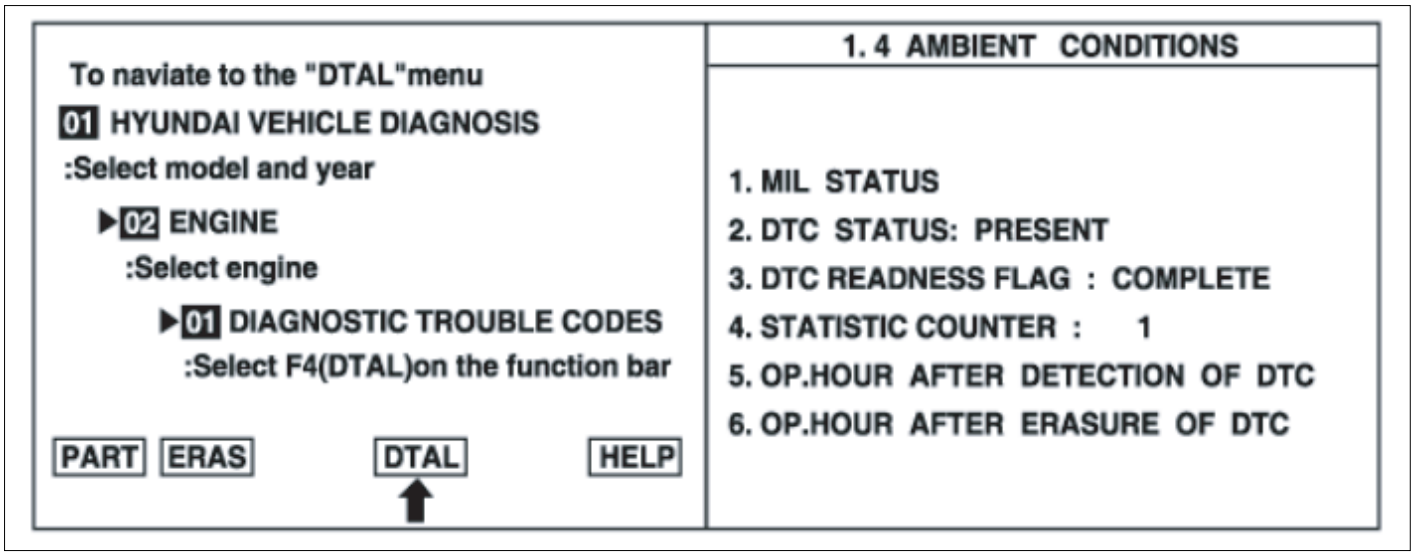

EFRF200D

5. Is parameter displayed "History(Not Present) fault"?

NOTE

- *History (Not Present) fault : DTC occurred but has been cleared.*
- *Present fault : DTC is occurring at present time.*

YES

▶ Fault is intermittent caused by poor contact in the sensor's and/or ECM's connector or was repaired and ECM memory was not cleared. Thoroughly check connectors for looseness, poor connection, bending, corrosion, contamination, deterioration, or damage. Repair or replace as necessary and then go to "Verification of Vehicle Repair" procedure.

NO

▶ Go to next step as below

GROUND CIRCUIT INSPECTION EDCB9F55

1. Ignition "OFF"

2. Disconnect OTS connector

3. Measure resistance between terminals 2 of the OTS harness connector and chassis ground

Specification : Approx. 0Ω

4. Is resistance within specification?

YES

▶ Go to "Terminal and connector Inspection" procedure

NO

▶ Repair open circuit and go to "Verification of Vehicle Repair" procedure

SIGNAL CIRCUIT INSPECTION E489F15E

1. Ignition "ON"
2. Measure voltage between terminals 1 of the OTS harness connector and chassis ground

Specification : Approx. 5V

3. Is voltage within specification?

YES

▶ Go to next step as below

NO

▶ Check for open or short to battery in signal circuit. Repair as necessary and go to "Verification of Vehicle Repair" procedure.

TERMINAL AND CONNECTOR INSPECTION EEB05CD5

Refer to DTC P0196.

COMPONENT INSPECTION E6C66BA4

Refer to DTC P0196.

VERIFICATION OF VEHICLE REPAIR E634CA5C

Refer to DTC P0196.

DTC P0221 THROTTLE/PEDAL POSITION SENSOR/SWITCH "B" CIRCUIT RANGE/PERFORMANCE

COMPONENT LOCATION EEAB3C65

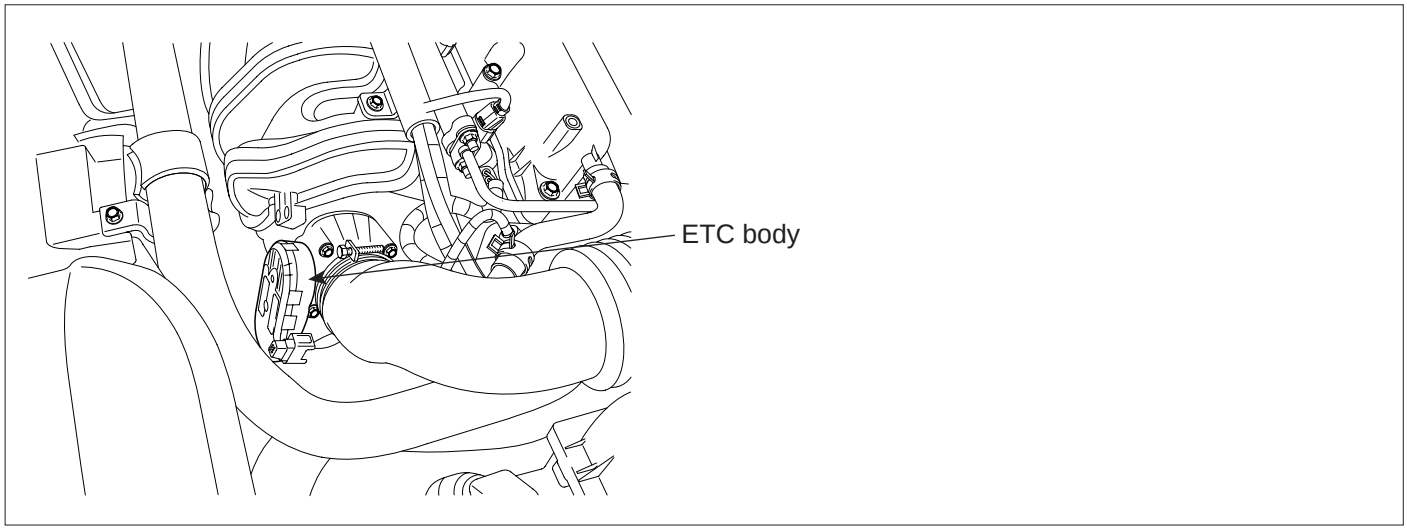

EFRF447B

GENERAL DESCRIPTION EA69CB0C

The Electronic Throttle Control(ETC) system is made of the components throttle body, throttle position sensor 1 & 2 and accelerator pedal position sensor 1 & 2. TPS1 & 2 are sharing the same source voltage and ground, the rotating shaft and potentiometer position. The throttle valve opening is control by throttle motor which is controlled by Engine Control Module(ECM).The opposite position indicator shows inverted signal characteristics.TPS1 output voltage increases smoothly in proportion with the throttle valve opening angle after starting. TPS2 output voltage decreases smoothly in inverse proportion with the throttle valve opening angle after starting. Throttle position sensor detects the throttle valve position. It also sends a signal to ECM. The throttle position sensor signal is used for feed back control.

DTC DESCRIPTION E07C3801

The ECM compares the actual measured Mass Air Flow signal with the modeled Mass Air Flow value to detect implausible TPS2 signal. The DTC P0221 is set when the difference between these two value is too high or too low with lambda deviation in same direction for a certain time.

DTC DETECTING CONDITION EB82CB8C

Item	Detecting Condition	Possible Cause
DTC Strategy	• Plausibility check between TPS2 and MAF	• Contact resistance in connectors • Air leakage in intake system • Faulty TPS2
Enable Conditions	• Ignition "ON" • No engine stop and engine start • No TPS adaptation request • No TPS error • |actual TPS1 - actual TPS2| 〉 8°	
Threshold Value	• Integrated error between measured MAF and substitute MAF of TPS2 〉 TPS1 or Mean value of error between measured MAF and substitute MAF of TPS2 〉 threshold	
Diagnostic Time	• 0.3sec.	

SPECIFICATION E457D939

Test Condition	TPS1	TPS2
Closed Throttle Status	0.2~0.8V	4.3~4.8V
Wide Open Throttle(After starting engine)	4.3~4.8V	0.2~0.8V

SCHEMATIC DIAGRAM EE0A3CD2

[Circuit Diagram]

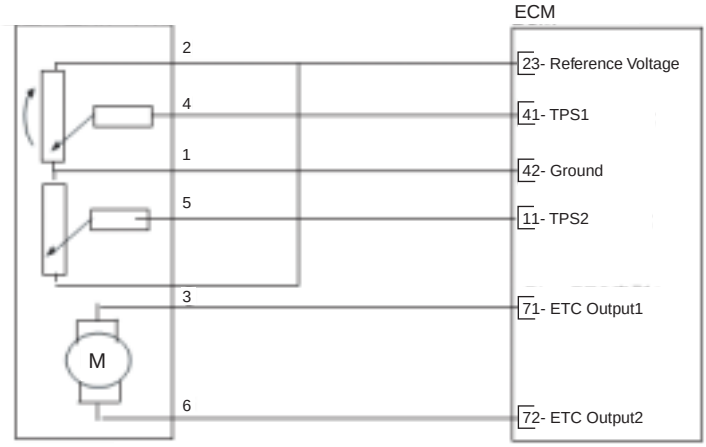

[Connection Information]

Terminal	Connected to	Function
1	ECM Terminal 42	Ground
2	ECM Terminal 23	Reference Voltage
3	ECM Terminal 71	ECT Output1
4	ECM Terminal 41	TPS1
5	ECM Terminal 11	TPS2
6	ECM Terminal 72	ECT Output2

[Harness Connector]

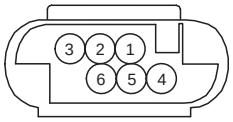

C06

ECM

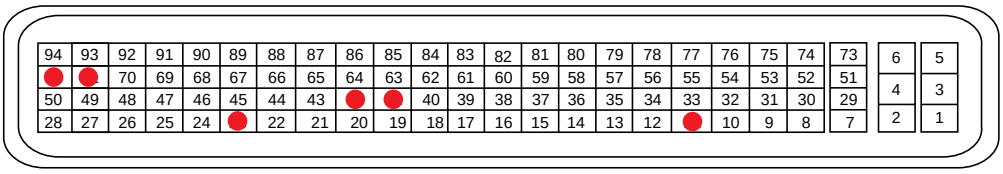

C44

EFRF300W

SIGNAL WAVEFORM AND DATA EBCAAC6B

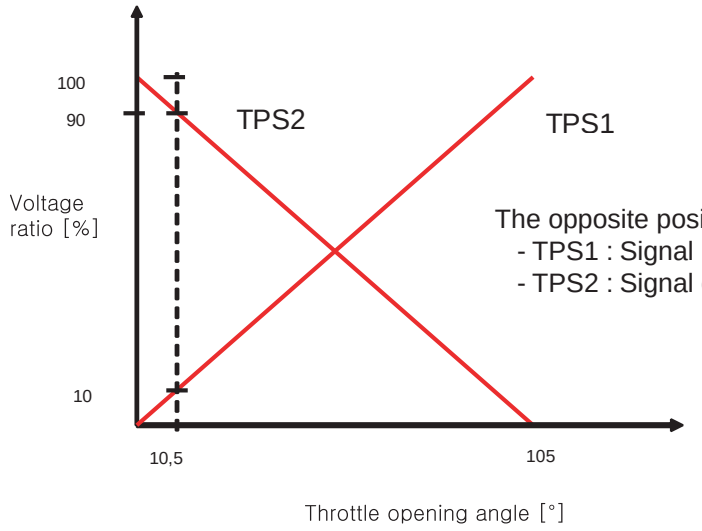

The opposite position indicator shows inverted signal characteristics
- TPS1 : Signal increases with throttle opening angle
- TPS2 : Signal decreases with throttle opening angle

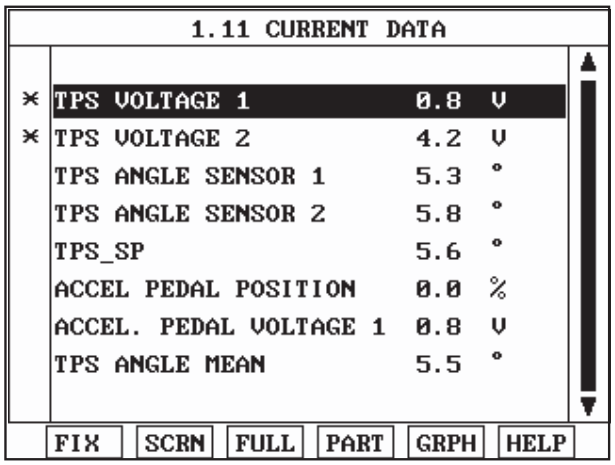

Fig. 1

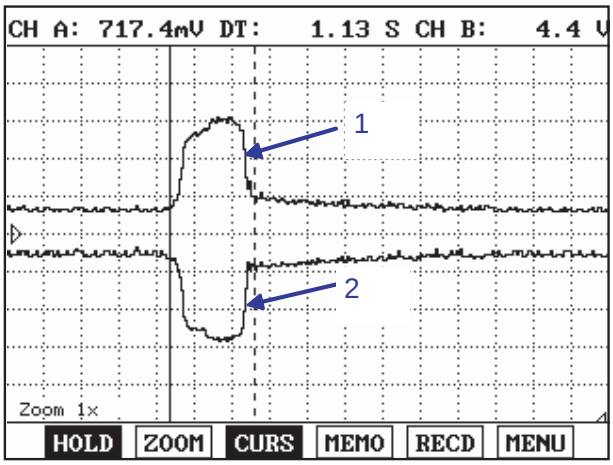

Fig. 2

Fig. 1) TPS2 output voltage after engine start:
Closed throttle status : Approx. 4.3~4.8V, Wide open throttle : Approx 0.2~0.8V

Fig. 2)
1(TPS1) : Output voltage increases smoothly in proportion with the throttle valve opening angle after starting.
2(TPS2) : Output voltage decreases smoothly in inverse proportion with the throttle valve opening angle after starting.

EFRF401A

MONITOR DTC STATUS ED3EFC57

NOTE

If any codes relating to TPS1 or MAFS are stored, do ALL REPAIRS associated with those codes before proceeding with further troubleshooting

1. Connect scan tool and select "Diagnostic Trouble Codes(DTCs)" mode
2. Press F4(DTAL) to select DTC information from the DTCs menu

3. Confirm that "DTC Readiness Flag" indicates "Complete". If not, drive the vehicle within conditions noted in the freeze frame data or enable conditions

4. Read "DTC Status" parameter

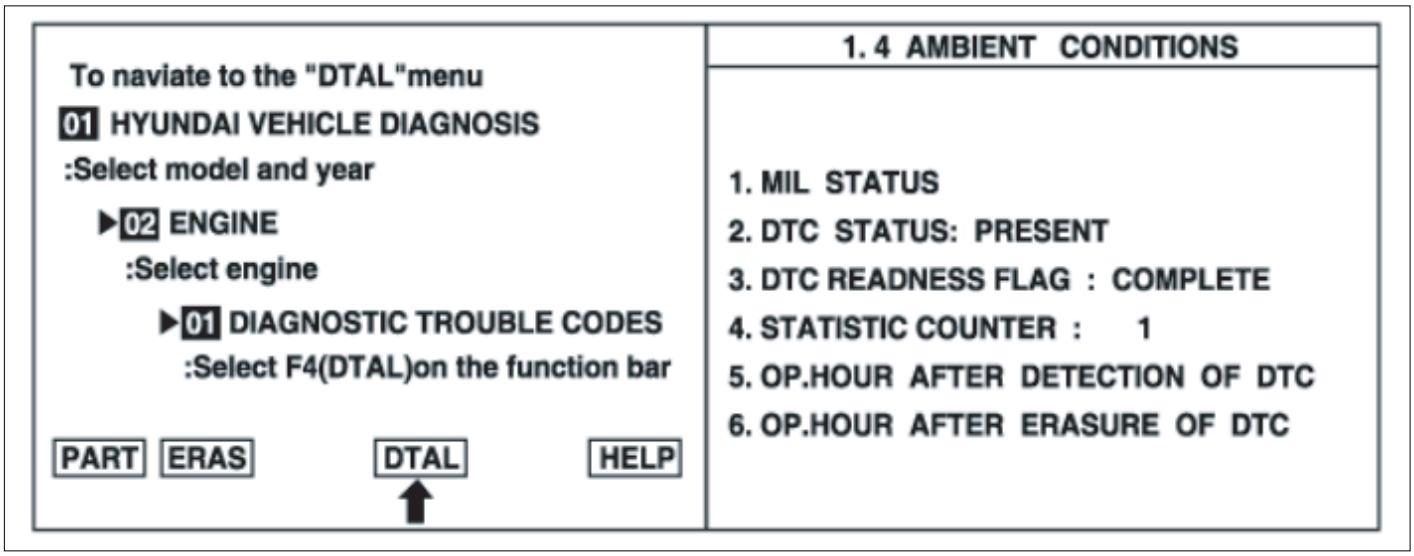

EFRF200D

5. Is parameter displayed "History(Not Present) fault"?

NOTE

- *History (Not Present) fault : DTC occurred but has been cleared.*
- *Present fault : DTC is occurring at present time.*

YES

▶ Fault is intermittent caused by poor contact in the sensor's and/or ECM's connector or was repaired and ECM memory was not cleared. Thoroughly check connectors for looseness, poor connection, bending, corrosion, contamination, deterioration, or damage. Repair or replace as necessary and then go to "Verification of Vehicle Repair" procedure.

NO

▶ Go to next step as below

AIR LEAKAGE INSPECTION E8F2FB2A

1. Visually/physically inspect the following items:
   - Vacuum hoses for splits, kinks and improper connections.
   - EVAP system for leakage
   - PCV hose for proper installation

2. Was a problem found in any of the above areas?

YES

▶ Repair as necessary and go to "Verification of Vehicle Repair" procedure

NO

▶ Go to next step as below

TERMINAL AND CONNECTOR INSPECTION ECABEDBB

1. Many malfunctions in the electrical system are caused by poor harness(es) and terminals. Faults can also be caused by interference from other electrical systems, and mechanical or chemical damage.

2. Thoroughly check connectors for looseness, poor connection, bending, corrosion, contamination, deterioration, or damage.

3. Has a problem been found?

YES

▶ Repair as necessary and go to "Verification of Vehicle Repair" procedure

NO

▶ Go to "Component Inspection" procedure

COMPONENT INSPECTION EDAF1CDF

1. After engine starting, connect Scantool and monitor the "TPS2" parameter on the Scantool data list.

Specification :
- Closed throttle status : Approx. 4.3~4.8V, Wide open throttle : Approx 0.2~0.8V
- Output voltage decreases smoothly in inverse proportion with the throttle valve opening angle.

2. Is sensor data near the specified value?

YES

▶ Check for poor connection between ECM and component: backed out terminal, improper mating, broken locks or poor terminal to wire connection. Repair as necessary and go to "Verification of Vehicle Repair" procedure

NO

▶ Check TPS2 for contamination, deterioration, or damage. Substitute with a known-good TPS2 and check for proper operation. If the problem is corrected, replace TPS2 and then go to "Verification of Vehicle Repair" procedure.

NOTE

It is necessary to perform the TPS adaptation procedure with Scan tool when the throttle body assembly or ECM is replaced.

■ TPS adaptation procedure
1. Erase previous TPS adaptation value using Scan tool.
2. Ignition "OFF" and then "ON" without cranking. Wait for 10 seconds under enable conditions
   - Enable conditions : Battery 〉 10V & Intake Air Temp. 〉 5.3℃(41.5°F) & 5.3℃(41.5°F) 〈 Engine Coolant Temp. 〈 99.8℃(211.6°F)
3. After TPS adaptation, the system normality should be confirmed by reading out "FMY" on the Scan Tool

VERIFICATION OF VEHICLE REPAIR E9CB1CC3

After a repair, it is essential to verify that the fault has been corrected.

1. Connect scan tool and select "Diagnostic Trouble Codes(DTCs)" mode

2. Press F4(DTAL) and confirm that "DTC Readiness Flag" indicates "Complete". If not, drive the vehicle within conditions noted in the freeze frame data or enable conditions

3. Read "DTC Status" parameter

4. Is parameter displayed "History(Not Present) fault"?

YES

▶ System performing to specification at this time. Clear the DTC

NO

▶ Go to the applicable troubleshooting procedure.

DTC P0222 THROTTLE/PEDAL POSITION SENSOR/SWITCH "B" CIRCUIT LOW INPUT

COMPONENT LOCATION E83BDD13

Refer to DTC P0221.

GENERAL DESCRIPTION ED3ADB5B

Refer to DTC P0221.

DTC DESCRIPTION E9606BED

ECM sets DTC P0222 if the ECM detects signal voltage lower than the possible range of a properly operating TPS2.

DTC DETECTING CONDITION EA81CCBE

Item	Detecting Condition	Possible Cause
DTC Strategy	• Electrical Check	• Open in power supply harness • Short to ground in power supply or signal harness • Contact resistance in connectors • Faulty TPS2
Enable Conditions	• Ignition "ON" • No TPS error	
Threshold Value	• TPS2 〈 0.1V	
Diagnostic Time	• 0.05sec.	

SPECIFICATION EF1A3B89

Refer to DTC P0221.

SCHEMATIC DIAGRAM E21E1F4A

Refer to DTC P0221.

SIGNAL WAVEFORM AND DATA E0CD5C4B

Refer to DTC P0221.

MONITOR DTC STATUS EBCE89CD

Refer to DTC P0221.

TERMINAL AND CONNECTOR INSPECTION EB13C1F2

1. Many malfunctions in the electrical system are caused by poor harness(es) and terminals. Faults can also be caused by interference from other electrical systems, and mechanical or chemical damage.

2. Thoroughly check connectors for looseness, poor connection, bending, corrosion, contamination, deterioration, or damage.

3. Has a problem been found?

YES

▶ Repair as necessary and go to "Verification of Vehicle Repair" procedure

NO

▶ Go to "Power Circuit Inspection" procedure

POWER AND CIRCUIT INSPECTION EE42BF06

1. Ignition "OFF"
2. Disconnect TPS2 connector
3. Ignition "ON" & Engine "OFF"
4. Measure voltage between terminal 2 of the sensor harness connector and chassis ground

Specification : Approx. 5V

5. Is voltage within the specification?

YES

▶ Go to "Ground Circuit inspection" procedure.

NO

▶ Possibility of open or short to ground in 5V reference circuit. Repair as necessary and go to "Verification of Vehicle Repair" procedure

GROUND CIRCUIT INSPECTION EFEBD12D

1. Ignition "OFF"
2. Measure resistance between terminal 1 of the sensor harness connector and chassis ground

Specification : Approx. 0Ω

3. Is resistance within the specification?

YES

▶ Go to "Signal Circuit Inspection" procedure

NO

▶ Check the open in ground circuit.
Repair as necessary and go to "Verification of Vehicle Repair" procedure

SIGNAL CIRCUIT INSPECTION EEA63DDE

1. Measure resistance between terminal 5 of the sensor harness connector and chassis ground

Specification : Infinite

2. Is resistance within the specification?

YES

▶ Go to "Component Inspection" procedure

NO

▶ Check the short to ground in signal circuit.
Repair as necessary and go to "Verification of Vehicle Repair" procedure

COMPONENT INSPECTION E27B55CA

Refer to DTC P0221.

VERIFICATION OF VEHICLE REPAIR E6B8CAF6

Refer to DTC P0221.

DTC P0223 THROTTLE/PEDAL POSITION SENSOR/SWITCH "B" CIRCUIT HIGH INPUT (GASOLINE)

COMPONENT LOCATION EDB5AFC6

Refer to DTC P0221.

GENERAL DESCRIPTION EF11CAE7

Refer to DTC P0221.

DTC DESCRIPTION E327ADFA

ECM sets DTC P0223 if the ECM detects signal voltage lower than the possible range of a properly operating TPS2.

DTC DETECTING CONDITION E85FE2AD

Item	Detecting Condition	Possible Cause
DTC Strategy	• Electrical Check	• Short to battery in signal circuit • Open in ground circuit • Contact resistance in connectors • Faulty TPS2
Enable Conditions	• Ignition "ON" • No TPS error	
Threshold Value	• TPS2 〉 4.9V	
Diagnostic Time	• 0.05sec.	

SPECIFICATION E02FFFA4

Refer to DTC P0221.

SCHEMATIC DIAGRAM E88A94FA

Refer to DTC P0221.

SIGNAL WAVEFORM AND DATA EB9BCB0B

Refer to DTC P0221.

MONITOR DTC STATUS E2B9981A

1. Connect scan tool and select "Diagnostic Trouble Codes(DTCs)" mode
2. Press F4(DTAL) to select DTC information from the DTCs menu
3. Confirm that "DTC Readiness Flag" indicates "Complete". If not, drive the vehicle within conditions noted in the freeze frame data or enable conditions
4. Read "DTC Status" parameter

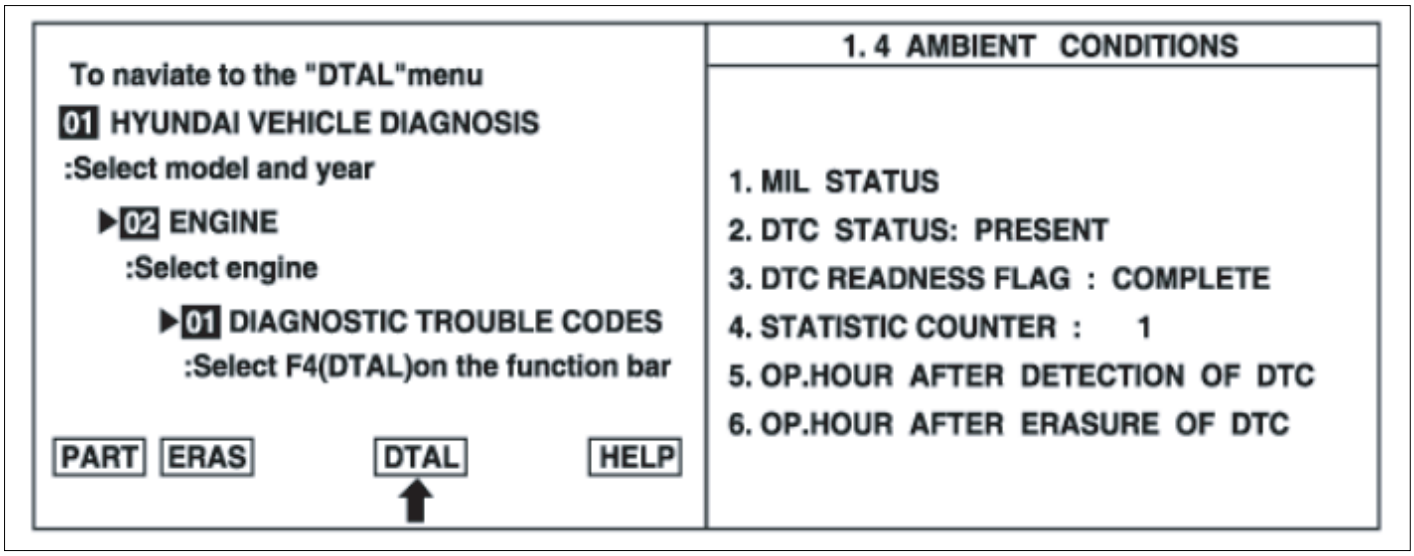

EFRF200D

5. Is parameter displayed "History(Not Present) fault"?

NOTE

- *History (Not Present) fault : DTC occurred but has been cleared.*
- *Present fault : DTC is occurring at present time.*

YES

▶ Fault is intermittent caused by poor contact in the sensor's and/or ECM's connector or was repaired and ECM memory was not cleared. Thoroughly check connectors for looseness, poor connection, bending, corrosion, contamination, deterioration, or damage. Repair or replace as necessary and then go to "Verification of Vehicle Repair" procedure.

NO

▶ Go to next step as below

TERMINAL AND CONNECTOR INSPECTION EB2A6ABB

1. Many malfunctions in the electrical system are caused by poor harness(es) and terminals. Faults can also be caused by interference from other electrical systems, and mechanical or chemical damage.

2. Thoroughly check connectors for looseness, poor connection, bending, corrosion, contamination, deterioration, or damage.

3. Has a problem been found?

YES

▶ Repair as necessary and go to "Verification of Vehicle Repair" procedure

NO

▶ Go to "Signal Circuit Inspection" procedure

SIGNAL CIRCUIT INSPECTION ED47D329

1. Ignition "OFF"
2. Disconnect TPS2 connector
3. Ignition "ON" & Engine "OFF"
4. Measure resistance between terminal 5 of the sensor harness connector and chassis ground.

Specification : Approx.0V

5. Is voltage within the specification?

YES

▶ Go to "Component Inspection" procedure

NO

▶ Check the short to ground in signal circuit.
Repair as necessary and go to "Verification of Vehicle Repair" procedure

COMPONENT INSPECTION EAF0E0C1

Refer to DTC P0221.

VERIFICATION OF VEHICLE REPAIR EAB1B410

Refer to DTC P0221.

DTC P0230 FUEL PUMP PRIMARY CIRCUIT

COMPONENT LOCATION E66D77D2

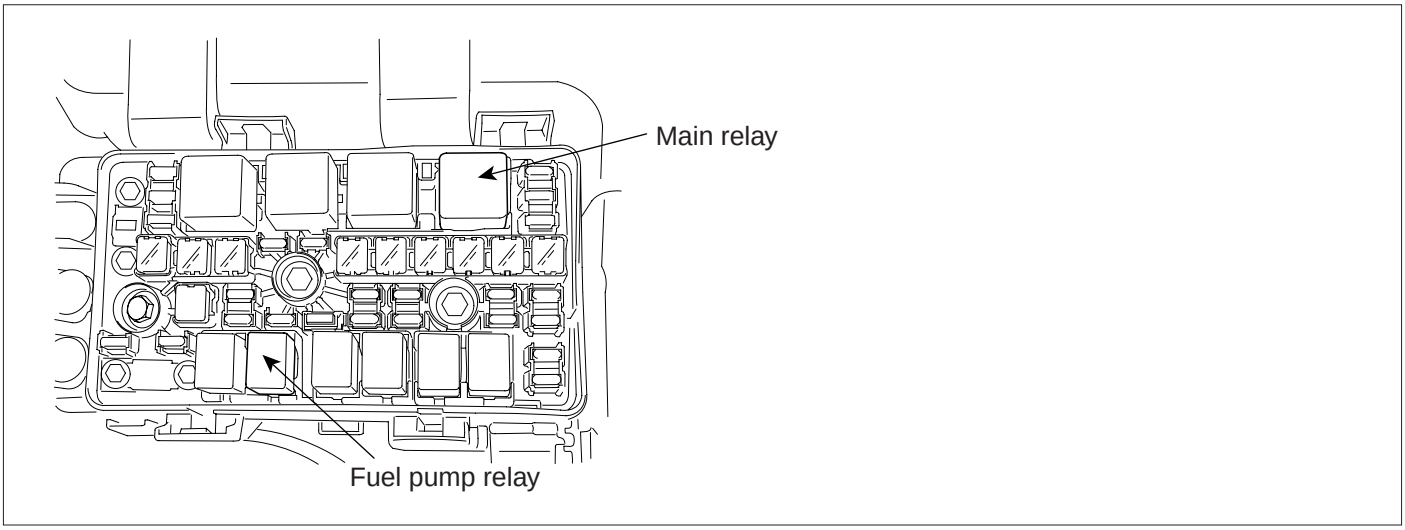

EFRF019A

GENERAL DESCRIPTION E9A5EF05

The ECM provides ground to one side of the coil in the fuel pump relay to control the fuel pump relay. The other side of the fuel pump relay coil is connected to fuel pump relay, which activates when the ignition switch is ON. The ECM monitors the control circuit between the fuel pump relay and the ECM. When the ignition switch is turned ON, the ECM energizes the fuel pump relay, which sends power to the fuel pump.

DTC DESCRIPTION ED80B73D

ECM sets DTC P0230 if the ECM detects the fuel pump relay control circuit is open, short to ground or battery.

DTC DETECTING CONDITION E27B57B6

Item	Detecting Condition	Possible Cause
DTC Strategy	• Check open or short to ground/battery in control circuit	• Open or short in harness • Contact resistance in connectors • Faulty fuel pump relay
Enable Conditions	• 10V 〈 Battery voltage 〈 16V	
Threshold Value	• Open, short to battery or short to ground,	
Diagnostic Time	• 3sec.	

SCHEMATIC DIAGRAM EB2AD4B9

[Circuit Diagram]

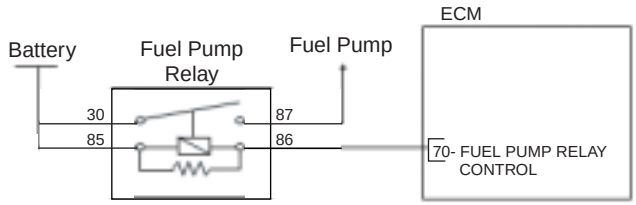

[Connection Information

Terminal	Connected to	Funtion
30	Battery	Power
85	Battery	Power
86	ECM Terminal 70	Relay Control
87	Fuel Pump	Fuel Pump

[Harness Connector]

ECM

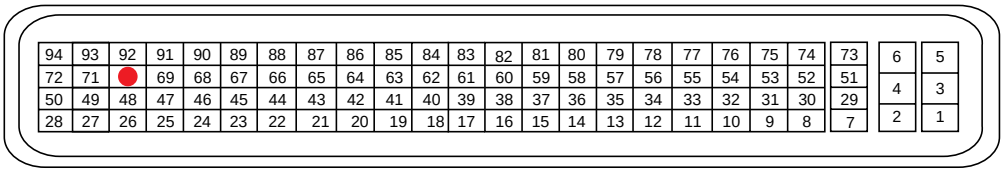

C44

EFRF300H

MONITOR DTC STATUS E70618CE

1. Connect scan tool and select "Diagnostic Trouble Codes(DTCs)" mode

2. Press F4(DTAL) to select DTC information from the DTCs menu

3. Confirm that "DTC Readiness Flag" indicates "Complete". If not, drive the vehicle within conditions noted in the freeze frame data or enable conditions

4. Read "DTC Status" parameter

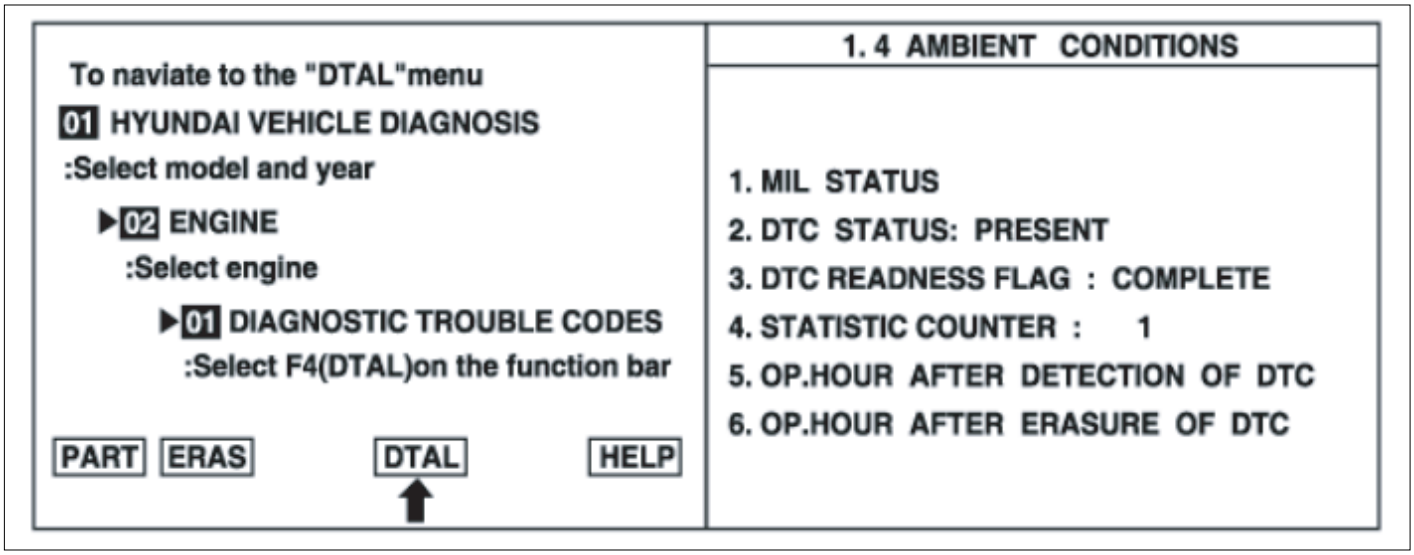

EFRF200D

5. Is parameter displayed "History(Not Present) fault"?

NOTE

- *History (Not Present) fault : DTC occurred but has been cleared.*
- *Present fault : DTC is occurring at present time.*

YES

▶ Fault is intermittent caused by poor contact in the sensor's and/or ECM's connector or was repaired and ECM memory was not cleared. Thoroughly check connectors for looseness, poor connection, bending, corrosion, contamination, deterioration, or damage. Repair or replace as necessary and then go to "Verification of Vehicle Repair" procedure.

NO

▶ Go to next step as below

COMPONENT INSPECTION E27EEB70

1. Ignition "OFF" & Engine "OFF"
2. Remove the fuel pump relay
3. Apply 12V and a ground to 85 and 86 of the fuel pump relay(Component side)
4. Check if the fuel pump relay works well when it is energized. (If the fuel pump relay works normally, a clicking sound can be heard.)
5. Does the fuel pump relay operate normally?

YES

▶ Go to "W/Harness Inspection" procedure.

NO

▶ Check relay for contamination, deterioration, or damage. Substitute with a known-good relay and check for proper operation. If the problem is corrected, replace relay and then go to "Verification of Vehicle Repair" procedure

TERMINAL AND CONNECTOR INSPECTION E354FB76

1. Many malfunctions in the electrical system are caused by poor harness(es) and terminals. Faults can also be caused by interference from other electrical systems, and mechanical or chemical damage.
2. Thoroughly check connectors for looseness, poor connection, bending, corrosion, contamination, deterioration, or damage.
3. Has a problem been found?

YES

▶ Repair as necessary and go to "Verification of Vehicle Repair" procedure

NO

▶ Go to "Power Circuit Inspection" procedure

POWER CIRCUIT INSPECTION E9D0BDB2

1. Remove the fuel pump relay.
2. Ignition "ON" & Engine "OFF".
3. Measure the voltage between terminal 30 of the fuel pump relay connector and chassis ground.
4. Measure the voltage between terminal 85 of the fuel pump relay connector and chassis ground.

Specification : Approx. B+

5. Is voltage within the specification?

YES

▶ Go to "Control Circuit Inspection" procedure

NO

▶ Check for an open or short to ground in the power supply circuit. Repair as necessary and go to "Verification of Vehicle Repair" procedure.

CONTROL CIRCUIT INSPECTION EF75C99E

1. Measure the voltage between terminal 86 of the fuel pump relay connector and chassis ground.

Specification : 4~5V

2. Is voltage within the specification?

YES

▶ Thoroughly Check for poor connection between ECM and component: backed out terminal, improper mating, broken locks or poor terminal to wire connection. Repair as necessary and go to "Verification of Vehicle Repair" procedure

NO

▶ Check control circuit for open or short. Repair as necessary and go to "Verification of Vehicle Repair" procedure.

VERIFICATION OF VEHICLE REPAIR EB0099C7

After a repair, it is essential to verify that the fault has been corrected.

1. Connect scan tool and select "Diagnostic Trouble Codes(DTCs)" mode
2. Press F4(DTAL) and confirm that "DTC Readiness Flag" indicates "Complete". If not, drive the vehicle within conditions noted in the freeze frame data or enable conditions
3. Read "DTC Status" parameter
4. Is parameter displayed "History(Not Present) fault"?

YES

▶ System performing to specification at this time. Clear the DTC

NO

▶ Go to the applicable troubleshooting procedure.

DTC P0261 CYLINDER 1-INJECTOR CIRCUIT LOW
DTC P0264 CYLINDER 2-INJECTOR CIRCUIT LOW
DTC P0267 CYLINDER 3-INJECTOR CIRCUIT LOW
DTC P0270 CYLINDER 4-INJECTOR CIRCUIT LOW

COMPONENT LOCATION EF269A5C

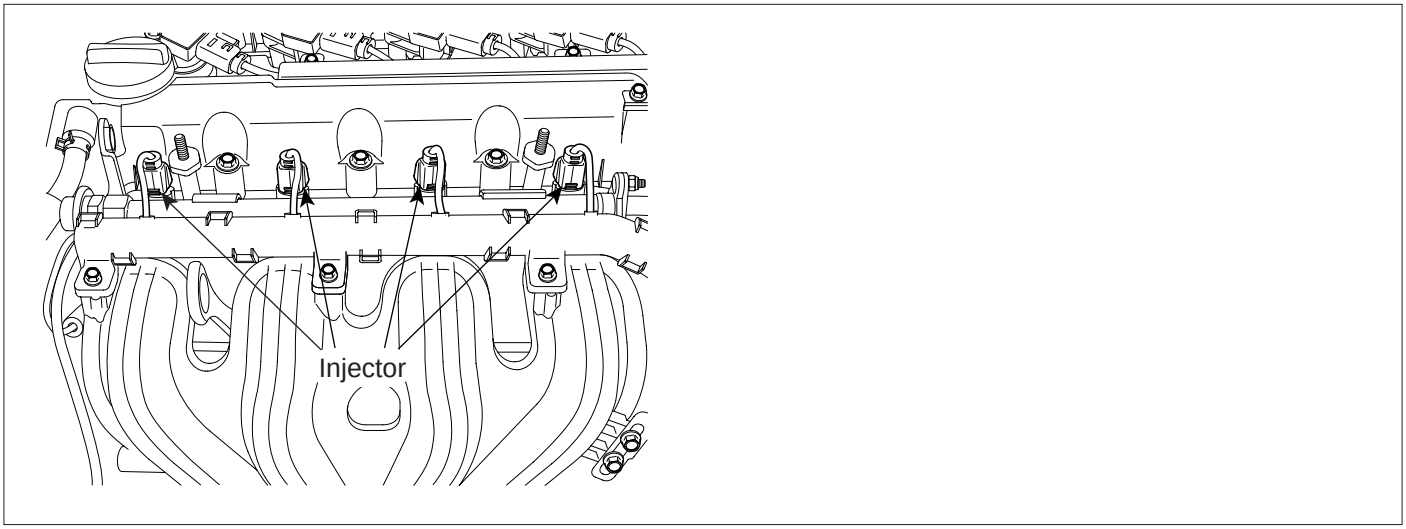

EFRF013A

GENERAL DESCRIPTION EA7BADFD

Based on information from various sensors, the ECM measures the fuel injection amount. The fuel injector is a solenoid-operated valve and the fuel injection amount is controlled by length of time the fuel injector is held open. The ECM controls each injector by grounding the control circuit. When the ECM energizes the injector by grounding the control circuit, the circuit voltage should be low (theoretically 0V) and the fuel is injected. When the ECM de-energizes the injector by opening the control circuit, the fuel injector is closed and circuit voltage should momentarily peak.

DTC DESCRIPTION E888E16F

ECM sets DTC P0261 if the ECM detects that injector (Cylinder #1) control circuit is shorted to ground.
ECM sets DTC P0264 if the ECM detects that injector (Cylinder #2) control circuit is shorted to ground.
ECM sets DTC P0267 if the ECM detects that injector (Cylinder #3) control circuit is shorted to ground.
ECM sets DTC P0270 if the ECM detects that injector (Cylinder #4) control circuit is shorted to ground.

DTC DETECTING CONDITION E3504F50

Item	Detecting Condition	Possible Cause
DTC Strategy	• Electrical Check	• Open in power supply harness • Short to ground in control harness • Contact resistance in connectors • Faulty injector
Enable Conditions	• Engine running • 6V 〈 Battery voltage • No full load range • Engine speed(rpm) 〈 6016	
Threshold Value	• Open or short to Ground in control circuit	
Diagnostic Time	• 1.5sec.	

SPECIFICATION EBEEFE32

Temp.(℃)	Temp.(℉)	Resistance (Ω)
20	13.8 ~ 15.2	13.8 ~ 15.2

SCHEMATIC DIAGRAM EEDEE0FA

[Circuit Diagram]

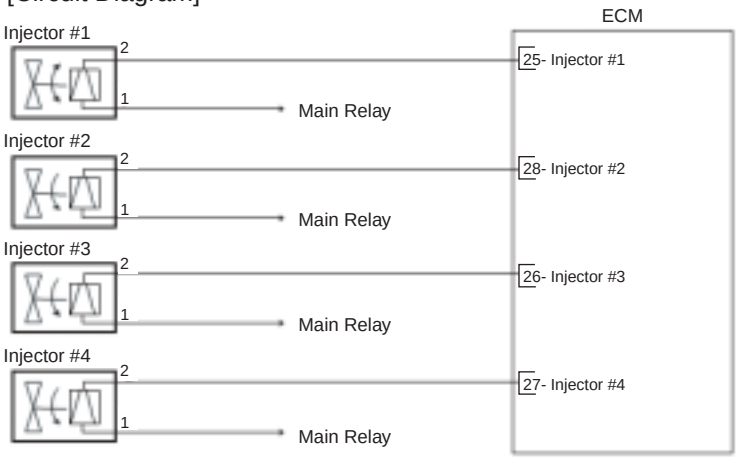

[Connection Information

Injector #1

Terminal	Connected to	Funtion
1	Main Relay	Power
2	ECM Terminal 25	Injector Control

Injector #2

Terminal	Connected to	Funtion
1	Main Relay	Power
2	ECM Terminal 28	Injector Control

Injector #3

Terminal	Connected to	Funtion
1	Main Relay	Power
2	ECM Terminal 26	Injector Control

Injector #4

Terminal	Connected to	Funtion
1	Main Relay	Power
2	ECM Terminal 27	Injector Control

[Harness Connector]

C28-1,C28-2,C28-3,C28-4

ECM

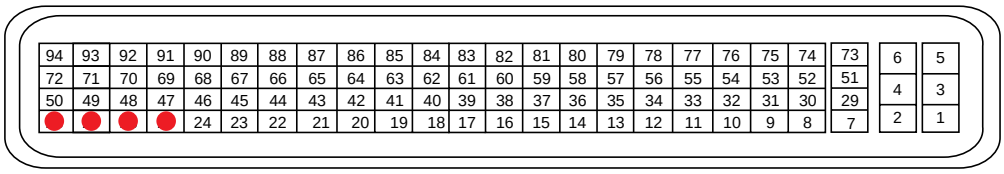

C44

EFRF300I

MONITOR DTC STATUS ED7C6732

1. Connect scan tool and select "Diagnostic Trouble Codes(DTCs)" mode
2. Press F4(DTAL) to select DTC information from the DTCs menu
3. Confirm that "DTC Readiness Flag" indicates "Complete". If not, drive the vehicle within conditions noted in the freeze frame data or enable conditions
4. Read "DTC Status" parameter

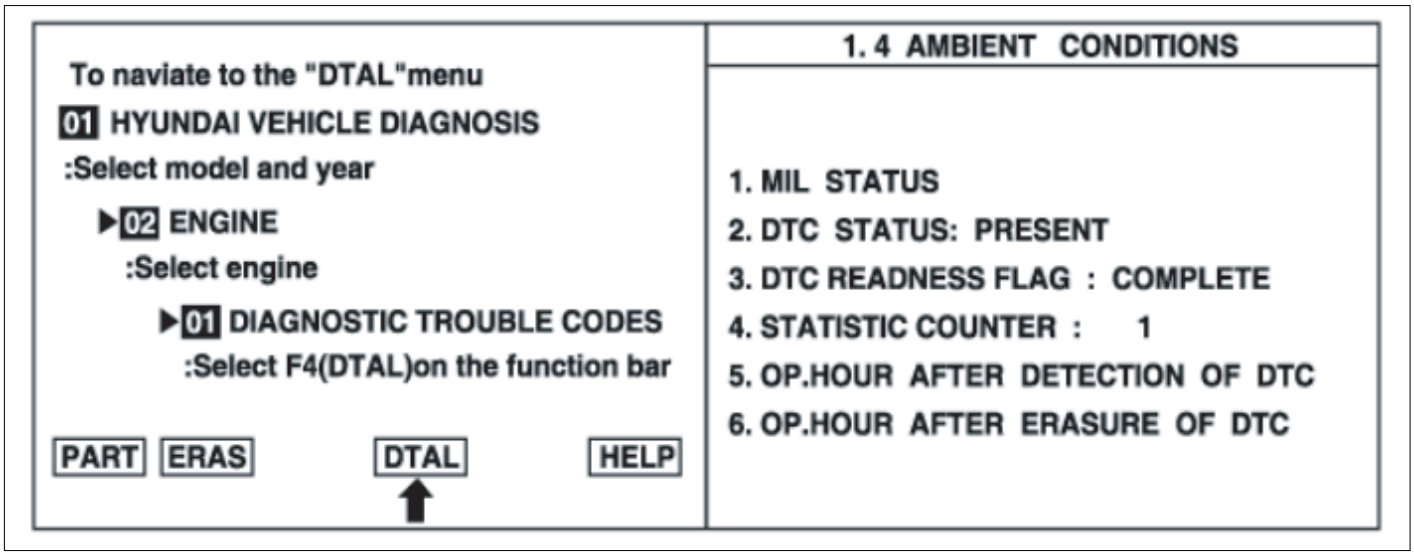

EFRF200D

5. Is parameter displayed "History(Not Present) fault"?

NOTE

- *History (Not Present) fault : DTC occurred but has been cleared.*
- *Present fault : DTC is occurring at present time.*

YES

▶ Fault is intermittent caused by poor contact in the sensor's and/or ECM's connector or was repaired and ECM memory was not cleared. Thoroughly check connectors for looseness, poor connection, bending, corrosion, contamination, deterioration, or damage. Repair or replace as necessary and then go to "Verification of Vehicle Repair" procedure.

NO

▶ Go to next step as below

COMPONENT INSPECTION E52B8A42

1. Ignition "OFF"
2. Disconnect injector connector
3. Measure resistance between terminals 1 and 2 of the injector connector(Component side)

SPECIFICATION

Temp.(°C)	Temp.(°F)	Resistance (Ω)
20	13.8 ~ 15.2	13.8 ~ 15.2

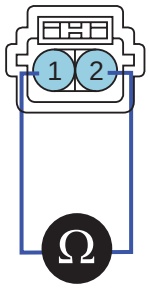

1. Power
2. Injector Control

X2614

4. Is resistance within the specification?

YES

▶ Go to "W/Harness Inspection" procedure

NO

▶ Check injector for contamination, deterioration, or damage. Substitute with a known-good injector and check for proper operation. If the problem is corrected, replace injector and then go to "Verification of Vehicle Repair" procedure

TERMINAL AND CONNECTOR INSPECTION EB980AA8

1. Many malfunctions in the electrical system are caused by poor harness(es) and terminals. Faults can also be caused by interference from other electrical systems, and mechanical or chemical damage.
2. Thoroughly check connectors for looseness, poor connection, bending, corrosion, contamination, deterioration, or damage.
3. Has a problem been found?

YES

▶ Repair as necessary and go to "Verification of Vehicle Repair" procedure

NO

▶ Go to "Power Circuit Inspection" procedure

POWER CIRCUIT INSPECTION EA00F2E6

1. Ignition "ON" & Engine "OFF"
2. Measure voltage between terminal 1 of the injector harness connector and chassis ground

Specification : Approx. B+

3. Is voltage within the specification?

YES

▶ Go to "Control Circuit Inspection" procedure

NO

▶ Check for a open in the power supply circuit between the main relay and the Injector.
Check for open or blown 10A injector fuse
Repair as necessary and go to "Verification of Vehicle Repair" procedure

CONTROL CIRCUIT INSPECTION E5ACF14E

1. Check for short to ground in control circuit

   1) Ignition "OFF"

   2) Measure resistance between terminal 2 of the injector harness connector and chassis ground

Specification : Infinite

   3) Is resistance within the specification?

   YES

   ▶ Check for poor connection between ECM and component: backed out terminal, improper mating, broken locks or poor terminal to wire connection. Repair as necessary and go to "Verification of Vehicle Repair" procedure

   NO

   ▶ Repair open or short to ground in control harness and go to "Verification of Vehicle Repair" procedure

VERIFICATION OF VEHICLE REPAIR EBC4AE79

After a repair, it is essential to verify that the fault has been corrected.

1. Connect scan tool and select "Diagnostic Trouble Codes(DTCs)" mode

2. Press F4(DTAL) and confirm that "DTC Readiness Flag" indicates "Complete". If not, drive the vehicle within conditions noted in the freeze frame data or enable conditions

3. Read "DTC Status" parameter

4. Is parameter displayed "History(Not Present) fault"?

YES

▶ System performing to specification at this time. Clear the DTC

NO

▶ Go to the applicable troubleshooting procedure.

DTC P0262 CYLINDER 1-INJECTOR CIRCUIT HIGH
DTC P0265 CYLINDER 2-INJECTOR CIRCUIT HIGH
DTC P0268 CYLINDER 3-INJECTOR CIRCUIT HIGH
DTC P0271 CYLINDER 4-INJECTOR CIRCUIT HIGH

COMPONENT LOCATION EFDB4DBB

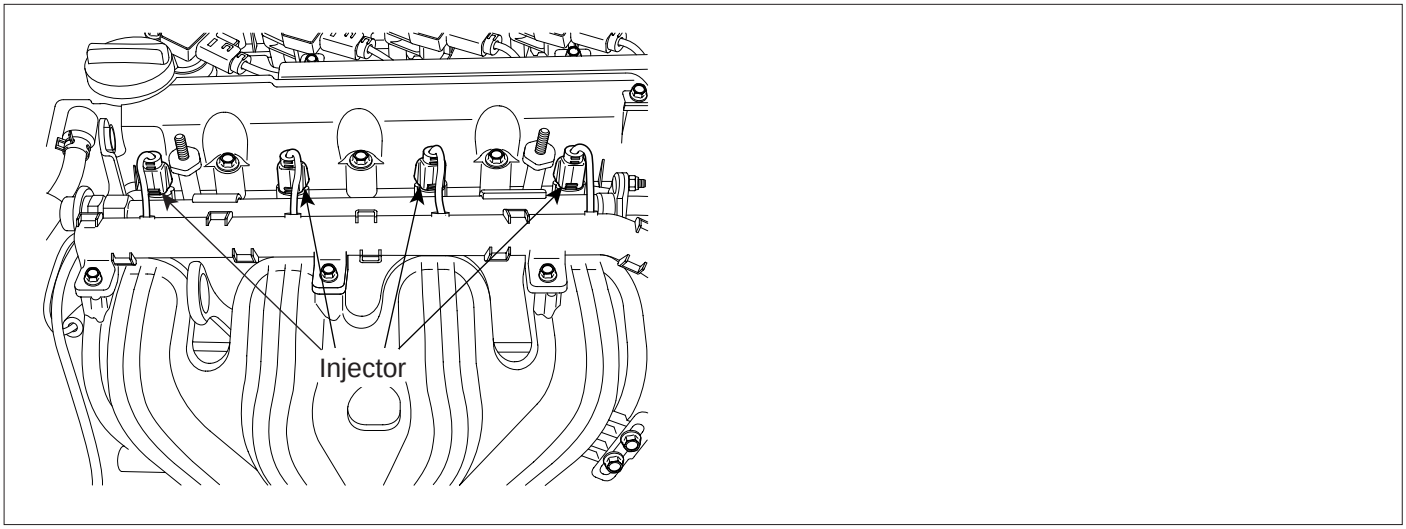

EFRF013A

GENERAL DESCRIPTION ED7AAAA1

Based on information from various sensors, the ECM measures the fuel injection amount. The fuel injector is a solenoid-operated valve and the fuel injection amount is controlled by length of time the fuel injector is held open. The ECM controls each injector by grounding the control circuit. When the ECM energizes the injector by grounding the control circuit, the circuit voltage should be low (theoretically 0V) and the fuel is injected. When the ECM de-energizes the injector by opening control circuit, the fuel injector is closed and circuit voltage should momentarily peak.

DTC DESCRIPTION EEE04AEA

ECM sets DTC P0262 if the ECM detects that injector (Cylinder #1) control circuit is open or shorted to battery voltage.
ECM sets DTC P0265 if the ECM detects that injector (Cylinder #2) control circuit is open or shorted to battery voltage.
ECM sets DTC P0268 if the ECM detects that injector (Cylinder #3) control circuit is open or shorted to battery voltage.
ECM sets DTC P0271 if the ECM detects that injector (Cylinder #4) control circuit is open or shorted to battery voltage.

DTC DETECTING CONDITION E66FECBB

Item	Detecting Condition	Possible Cause
DTC Strategy	• Electrical Check	• Open or short to battery in control harness. • Contact resistance in connectors • Faulty injector
Enable Conditions	• Engine running • 6V 〈 Battery voltage • No full load range • Engine speed(rpm) 〈 6016	
Threshold Value	• Short to battery in control circuit	
Diagnostic Time	• 1.5sec.	

SPECIFICATION E111B2BE

Temp.(°C)	Temp.(°F)	Resistance (Ω)
20	13.8 ~ 15.2	13.8 ~ 15.2

SCHEMATIC DIAGRAM EC59B3CC

[Circuit Diagram]

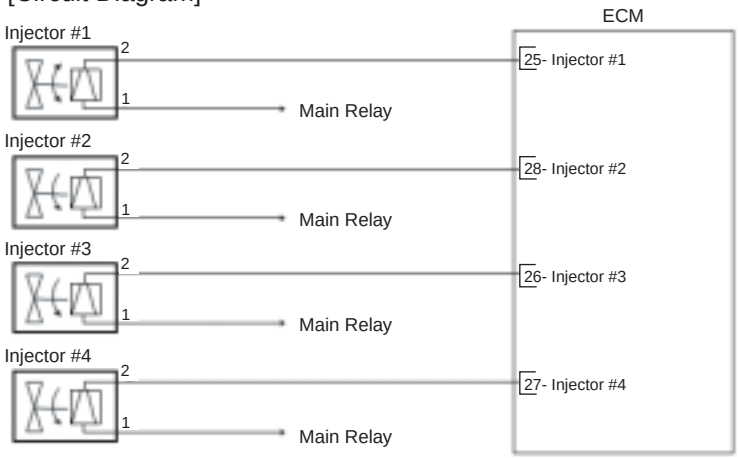

[Connection Information

Injector #1

Terminal	Connected to	Funtion
1	Main Relay	Power
2	ECM Terminal 25	Injector Control

Injector #2

Terminal	Connected to	Funtion
1	Main Relay	Power
2	ECM Terminal 28	Injector Control

Injector #3

Terminal	Connected to	Funtion
1	Main Relay	Power
2	ECM Terminal 26	Injector Control

Injector #4

Terminal	Connected to	Funtion
1	Main Relay	Power
2	ECM Terminal 27	Injector Control

[Harness Connector]

C28-1,C28-2,C28-3,C28-4

ECM

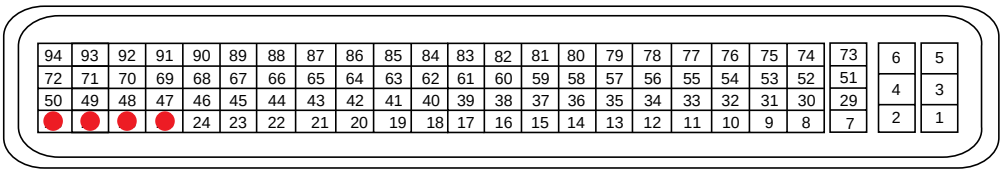

C44

EFRF300I

MONITOR DTC STATUS EFBA1FC7

1. Connect scan tool and select "Diagnostic Trouble Codes(DTCs)" mode
2. Press F4(DTAL) to select DTC information from the DTCs menu
3. Confirm that "DTC Readiness Flag" indicates "Complete". If not, drive the vehicle within conditions noted in the freeze frame data or enable conditions
4. Read "DTC Status" parameter

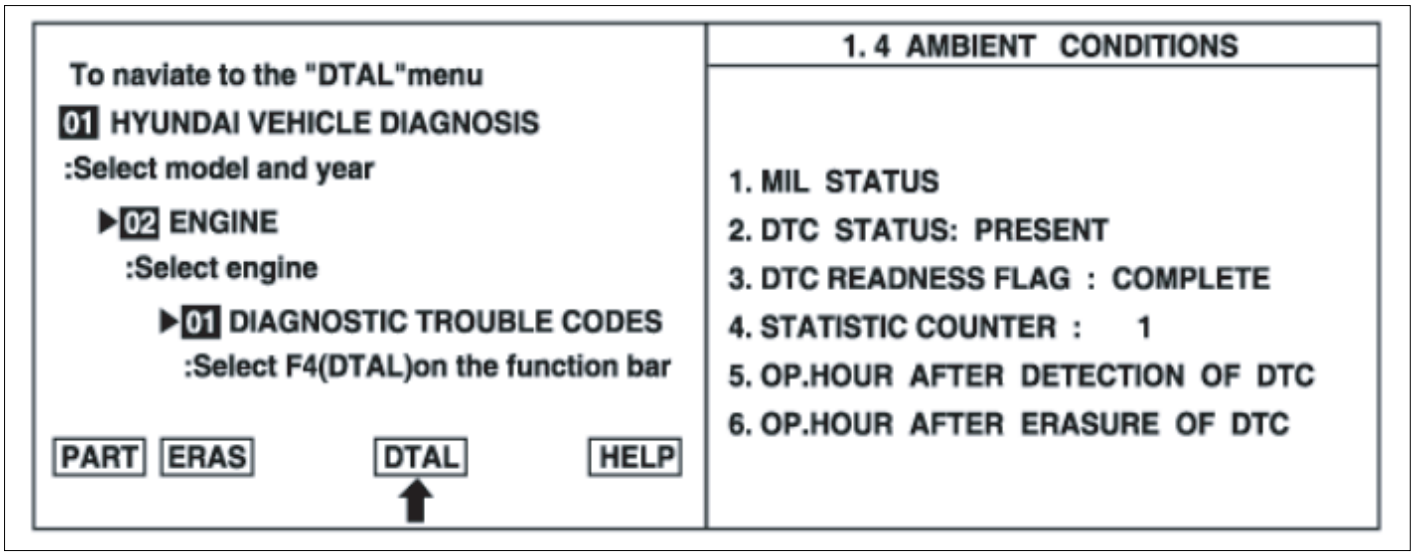

EFRF200D

5. Is parameter displayed "History(Not Present) fault"?

NOTE

- *History (Not Present) fault : DTC occurred but has been cleared.*
- *Present fault : DTC is occurring at present time.*

YES

▶ Fault is intermittent caused by poor contact in the sensor's and/or ECM's connector or was repaired and ECM memory was not cleared. Thoroughly check connectors for looseness, poor connection, bending, corrosion, contamination, deterioration, or damage. Repair or replace as necessary and then go to "Verification of Vehicle Repair" procedure.

NO

▶ Go to next step as below

COMPONENT INSPECTION E66B33AC

1. Ignition "OFF"
2. Disconnect injector connector
3. Measure resistance between terminals 1 and 2 of the injector connector(Component side)

SPECIFICATION

Temp.(℃)	Temp.(℉)	Resistance (Ω)
20	13.8 ~ 15.2	13.8 ~ 15.2

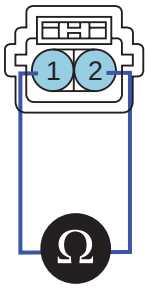

1. Power
2. Injector Control

X2614

4. Is resistance within the specification?

YES

▶ Go to "W/Harness Inspection" procedure

NO

▶ Check injector for contamination, deterioration, or damage. Substitute with a known-good injector and check for proper operation. If the problem is corrected, replace injector and then go to "Verification of Vehicle Repair" procedure

TERMINAL AND CONNECTOR INSPECTION E70A84EC

1. Many malfunctions in the electrical system are caused by poor harness(es) and terminals. Faults can also be caused by interference from other electrical systems, and mechanical or chemical damage.
2. Thoroughly check connectors for looseness, poor connection, bending, corrosion, contamination, deterioration, or damage.
3. Has a problem been found?

YES

▶ Repair as necessary and go to "Verification of Vehicle Repair" procedure

NO

▶ Go to "Power Circuit Inspection" procedure

POWER SUPPLY CIRCUIT INSPECTION EDABAAFF

1. Ignition "ON" & Engine "OFF"
2. Measure voltage between terminal 1 of the injector harness connector and chassis ground

Specification :	Approx. B+

3. Is voltage within the specification?

YES

▶ Go to "Control Circuit Inspection" procedure

NO

▶ Check for a open in the power supply circuit between the main relay and the Injector.
Check for open or blown 10A injector fuse
Repair as necessary and go to "Verification of Vehicle Repair" procedure

CONTROL CIRCUIT INSPECTION E1D293C4

1. Measure voltage between terminal 2 of the injector harness connector and chassis ground

Specification : Approx. 4~5V

2. Is voltage within the specification?

YES

▶ Check for poor connection between ECM and component: backed out terminal, improper mating, broken locks or poor terminal to wire connection. Repair as necessary and go to "Verification of Vehicle Repair" procedure

NO

▶ Check control circuit for open or short. Repair as necessary and go to "Verification of Vehicle Repair" procedure.

VERIFICATION OF VEHICLE REPAIR ECD9FB80

After a repair, it is essential to verify that the fault has been corrected.

1. Connect scan tool and select "Diagnostic Trouble Codes(DTCs)" mode
2. Press F4(DTAL) and confirm that "DTC Readiness Flag" indicates "Complete". If not, drive the vehicle within conditions noted in the freeze frame data or enable conditions
3. Read "DTC Status" parameter
4. Is parameter displayed "History(Not Present) fault"?

YES

▶ System performing to specification at this time. Clear the DTC

NO

▶ Go to the applicable troubleshooting procedure.

DTC P0300 RANDOM/MULTIPLE CYLINDER MISFIRE DETECTED

GENERAL DESCRIPTION E3F57D30

The Misfire monitor diagnostic is based on crankshaft rotation velocity variation. The ECM determines crankshaft rotational velocity using the crankshaft position sensor and camshaft position sensor. When a cylinder misfires the crankshaft slows down momentarily. By monitoring the crankshaft and camshaft position sensor signals, the ECM can calculate when a misfire occurs. For a non-catalyst damaging misfire, the diagnostic will be required to report a misfire present within 1000-3200 engine revolutions. For catalyst damaging misfire, the diagnostic will respond to monitor 200 engine revolutions. Rough roads may cause false misfire detection. The rough road(acceleration)sensor consists of a piezoelectric vibration pick up which detects vertical acceleration of the vehicle. The sensor signal is used by the ECM to determine the degree of vertical movement of the car, for example, on a bumpy road. Since this may also cause uneven engine running, the ECM uses the signal to distinguish the phenomenon from actual misfiring.

DTC DESCRIPTION E22FE234

The ECM must monitor the engine for misfiring possibly caused by ignition coil defects or injector fails. If misfiring is detected, the ECM will identify the cylinder(s) that has(have) misfired and then calculate misfiring rate for a given duration. The DTC for Misfire (P0301 to 0304) is set as soon as the misfiring rate exceeds the limit which may result in damage to the catalyst or increase emissions. The ECM stores the individual DTC for a cylinder which has more than a 10% total misfire rate. With a more than two cylinder misfire detection, the ECM sets P0300.

DTC DETECTING CONDITION EEF7E3DE

Item	Detecting Condition	Possible Cause
DTC Strategy	• Calculation of engine roughness	• Faulty spark plugs, high-tension lead, or Ignition coil • Incorrect valve timing • Uneven compression • Air leakage • Improper Fuel pressure or dirty fuel. • Blocked/Leaking injectors • Leakage between cooling system and cylinder
Enable Conditions	• Mass air flow above zero load curve • Mass air flow gradient is in predetermined range • Engine speed is in predetermined range • Coolant temperature is in predetermined range • No relevant failure • Throttle angle gradient is in predetermined range • No injector shut off • No rough road	
Threshold Value	• Misfire detected on 2 or more cylinders	
Diagnostic Time	• Continuous	

SPECIFICATION E2BE9BC6

Temp.(℃)	Temp.(℉)	Ignition primary coil (Ω)	Ignition secondary coil (kΩ)
20	68	0.56 ~ 0.68	6 ~ 8

MONITOR DTC STATUS E5C0205F

NOTE

If any codes relating to injectors, HO2S, ECT(Engine Coolant Temperature)Sensor, Throttle Position sensor or Mass Air Flow Sensor are stored, do ALL REPAIRS associated with those codes before proceeding with this troubleshooting tree.

1. Connect scan tool and select "Diagnostic Trouble Codes(DTCs)" mode

2. Press F4(DTAL) to select DTC information from the DTCs menu

3. Confirm that "DTC Readiness Flag" indicates "Complete". If not, drive the vehicle within conditions noted in the freeze frame data or enable conditions

4. Read "DTC Status" parameter

5. Is parameter displayed "History(Not Present) fault"?

NOTE

- *History (Not Present) fault : DTC occurred but has been cleared.*
- *Present fault : DTC is occurring at present time.*

YES

▶ Fault is intermittent caused by poor contact in the sensor's and/or ECM's connector or was repaired and ECM memory was not cleared. Thoroughly check connectors for looseness, poor connection, bending, corrosion, contamination, deterioration, or damage. Repair or replace as necessary and then go to "Verification of Vehicle Repair" procedure.

NO

▶ Go to next step as below

MONITOR ACTUATION TEST EA8B5C3D

NOTE

The main purpose of this test is to identify potential engine mechanical condition problems and fuel and ignition systems problems that are not common to all cylinders. For best results, perform this test while maintaining as steady an rpm reading as possible.

Caution! Before beginning tests; set the parking brake, place gear selector in P or N and block drive wheels for safety.

1. Warm up the engine to normal operating temperature and let it idle.

2. Install Scan Tool and select "INJECTOR #1" parameter on the Actuation Test mode shown in the figure.

3. Monitor engine rpm and shut off the injector #1 by pressing "STRT(F1)" key

4. Repeat procedure on all injectors and record the engine rpm.

Specification : All cylinders should show an even RPM drop.

5. Was each cylinder's rpm drop within the same value?

YES

▶ Go to "Timing Inspection" procedure

NO

▶ Cylinders with the least amount of RPM drop are not contributing their share of power. Go to "Spark plug cable Inspection" procedure.

NOTE

If the RPM loss between cylinders is quite large(200RPM or more) and engine has high mileage, there is possibility of engine wear. Perform compression test with pressure gauge to check the engine wear

SPARK PLUG CABLE INSPECTION

1. Remove suspect cylinder's spark plug cable

2. Visually/physically inspect the following items:
   - Damage, cracks and flashover

3. Measure the resistance of the spark plug cable referring to specification.

Specification : 5.6kΩ /m ±20%

NOTE

Resistance should not be higher than 10,000Ω per foot of cable. If resistance is higher than specification, replace the cable

4. Is the displayed value within the specified value?

YES

▶ Go to "Spark Plug Inspection " procedure

NO

▶ Repair as necessary and go to "Verification of Vehicle Repair" procedure

SPARK PLUG INSPECTION

1. Remove suspect cylinder's spark plugs

2. Visually/physically inspect the following items:
   - Damaged insulation, Worn electrodes, Oil or fuel fouled, Loose terminals and cracks
   - Check for plug gap : 1.0 - 1.1 mm (0.039 - 0.043 in.)
   - Check if the spark plug for the relevant cylinder is lighter in color than the other plugs.

3. Was a problem found in any of the above areas?

YES

▶ Repair as necessary and go to "Verification of Vehicle Repair" procedure

NO

▶ Go to "Fuel Injector Inspection" procedure

FUEL INJECTOR INSPECTION

1. Check the fuel injectors for clogging or any restrictions

Test Condition : Ignition "OFF" Specification : No clogging and restriction

2. Is the fuel injector OK?

YES

▶ Visually/physically inspect the engine mechanical problem as below:
- Leaky or sticky valves or rings
- Excessive valve deposits
- Weak valve spring
- Leaking head gasket

If NG, repair as necessary and go to "Verification of Vehicle Repair" procedure
If OK, go to "Ignition Coil Inspection" procedure

NO

▶ Repair as necessary and go to "Verification of Vehicle Repair" procedure

IGNITION COIL INSPECTION

1. Ignition "OFF"

2. Ignition coil connector : Disconnect

3. Visually/physically inspect the following items:
   - Damage, cracks and flashover

4. Measure the primary coil resistance between terminals 1 and 2

SPECIFICATION :

Temp.(℃)	Temp.(℉)	Ignition primary coil (Ω)	Ignition secondary coil (kΩ)
20	68	0.56 ~ 0.68	6 ~ 8

5. Is resistance within the specified value?

YES

▶ Go to "Timing Inspection" procedure

NO

▶ Replace as necessary and go to "Verification of Vehicle Repair" procedure

TIMING INSPECTION

1. Set up an oscilloscope as follows :
   Channel A (+): terminal 3 of the CKPS, (-): ground
   Channel B (+): terminal 3 of the CMPS, (-): ground

2. Start the engine and check for signal waveform whether synchronize with camshaft sensor or not and tooth is missing refer to sample waveforms as below

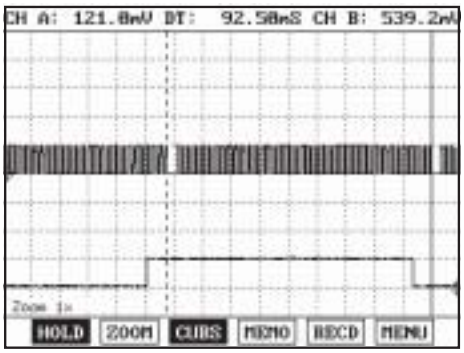

Fig.1

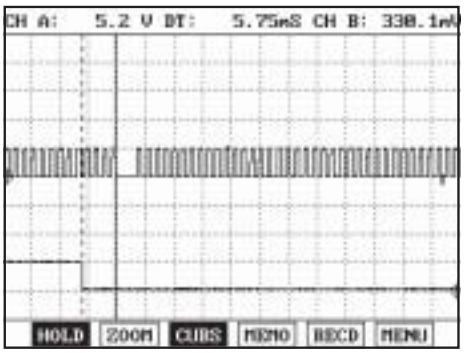

Fig.2

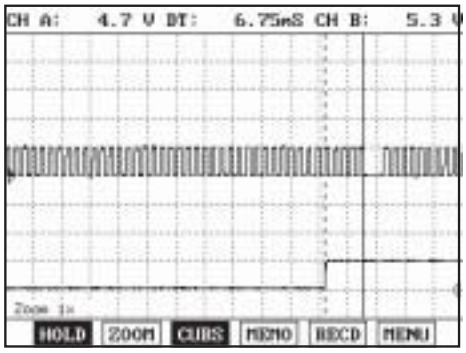

Fig.3

Fig.1) The square wave signal should be smooth and without any distortion.
Fig.2,3)The CMPS falling(rising) edge is coincided with 3~5 tooth of the CKP from one longer signal(missing tooth)

EFRF200N

3. Is the signal waveform normal?

YES

▶ Go to " Air Leakage Inspection " procedure

NO

▶ Remove Crankshaft Position Sensor(CKPS) and calculate air gap between sensor and flywheel/torque converter. Readjust as necessary and go to next step.

NOTE

Air gap [0.3~1.7 mm [0.012~0.067 in] = measure distance from housing to teeth on flywheel/torque converter (measurement "A") and from mounting surface on sensor to sensor tip (measurement "B") subtract "B" from "A"

If fail to synchronize CKPS with CMPS, check that the crankshaft and camshaft are correctly aligned the matching marks of the pulleys. Repair or readjust as necessary and go to "Verification of Vehicle Repair" procedure

AIR LEAKAGE INSPECTION E78AD648

1. Visually/physically inspect the air leakage in intake/exhaust system as following items,
   If OK, go to next step
   If NG, repair as necessary and go to "Verification of Vehicle Repair" procedure
   - Vacuum hoses for splits, kinks and improper connections.
   - Throttle body gasket
   - Gasket between intake manifold and cylinder head
   - Seals between intake manifold and fuel injectors
   - Exhaust system between HO2S and Three way catalyst for air leakage

2. Was a problem found in any of the above areas?

YES

▶ Go to "Fuel System Inspection" procedure

NO

▶ Repair air leakage and go to "Verification of Vehicle Repair" procedure

FUEL SYSTEM INSPECTION EA76E6D4

1. Check the fuel for excessive water, alcohol, or other contaminants. Replace contaminated fuel as necessary.
2. Install a fuel pressure gage
3. Inspect fuel pressure with normal idle status

Specification : 250~350kPa(2.50~3.50 kg/㎠, 36~50 psi)

4. Is fuel pressure within the specified value?

YES

▶ Check for poor connection between ECM and component: backed out terminal, improper mating, broken locks or poor terminal to wire connection. Repair as necessary and go to "Verification of Vehicle Repair" procedure

NO

▶ Repair as necessary refer to inspection noted as below and go to "Verification of Vehicle Repair" procedure

VERIFICATION OF VEHICLE REPAIR EEA80EAA

After a repair, it is essential to verify that the fault has been corrected.

1. Connect scan tool and select "Diagnostic Trouble Codes(DTCs)" mode
2. Press F4(DTAL) and confirm that "DTC Readiness Flag" indicates "Complete". If not, drive the vehicle within conditions noted in the freeze frame data or enable conditions
3. Read "DTC Status" parameter
4. Is parameter displayed "History(Not Present) fault"?

YES

▶ System performing to specification at this time. Clear the DTC

NO

▶ Go to the applicable troubleshooting procedure.

DTC P0301 CYLINDER 1-MISFIRE DETECTED
DTC P0302 CYLINDER 2-MISFIRE DETECTED
DTC P0303 CYLINDER 3-MISFIRE DETECTED
DTC P0304 CYLINDER 4-MISFIRE DETECTED

GENERAL DESCRIPTION EA5ED5DB

The Misfire monitor diagnostic is based on crankshaft rotation velocity variation. The ECM determines crankshaft rotational velocity using the crankshaft position sensor and camshaft position sensor. When a cylinder misfires the crankshaft slows down momentarily. By monitoring the crankshaft and camshaft position sensor signals, the ECM can calculate when a misfire occurs. For a non-catalyst damaging misfire, the diagnostic will be required to report a misfire present within 1000-3200 engine revolutions. For catalyst damaging misfire, the diagnostic will respond to monitor 200 engine revolutions. Rough roads may cause false misfire detection. The rough road(acceleration)sensor consists of a piezoelectric vibration pick up which detects vertical acceleration of the vehicle. The sensor signal is used by the ECM to determine the degree of vertical movement of the car, for example, on a bumpy road. Since this may also cause uneven engine running, the ECM uses the signal to distinguish the phenomenon from actual misfiring.

DTC DESCRIPTION E73ABBE0

The ECM must monitor the engine for misfiring possibly caused by ignition coil defects or injector fails. If misfiring is detected, the ECM will identify the cylinder(s) that has(have) misfired and then calculate misfiring rate for a given duration. The DTC for Misfire (P0301 to 0304) is set as soon as the misfiring rate exceeds the limit which may result in damage to the catalyst or increase emissions. The ECM stores the individual DTC for a cylinder which has more than a 10% total misfire rate.

DTC DETECTING CONDITION E83AD9D3

Item		Detecting Condition	Possible Cause
DTC Strategy		• Calculation of engine roughness	• Faulty spark plugs, high-tension lead, or Ignition coil • Incorrect valve timing • Uneven compression • Air leakage • Improper Fuel pressure or dirty fuel. • Blocked/Leaking injectors • Leakage between cooling system and cylinder
Enable Conditions		• Mass air flow above zero load curve • Mass air flow gradient is in predetermined range • Engine speed is in predetermined range • Coolant temperature is in predetermined range • No relevant failure • Throttle angle gradient is in predetermined range • No injector shut off • No rough road	
Case1)	Threshold Value	• Misfire= 12~50% within 200 rev.	
	Diagnosis Time	• 200 revolution or 3*200 revolution	
Case2)	Threshold Value	• Misfire 〉 1.3% within 1000 revolutions	
	Diagnosis Time	• 1000 revolution or 4*1000 revolution	

SPECIFICATION ECC6AF26

Temp.(℃)	Temp.(℉)	Ignition primary coil (Ω)	Ignition secondary coil (kΩ)
20	68	0.56 ~ 0.68	6 ~ 8

MONITOR DTC STATUS E2E34C8D

NOTE

If any codes relating to injectors, HO2S, ECT(Engine Coolant Temperature)Sensor, Throttle Position sensor or Mass Air Flow Sensor are stored, do ALL REPAIRS associated with those codes before proceeding with this troubleshooting tree.

1. Connect scan tool and select "Diagnostic Trouble Codes(DTCs)" mode
2. Press F4(DTAL) to select DTC information from the DTCs menu
3. Confirm that "DTC Readiness Flag" indicates "Complete". If not, drive the vehicle within conditions noted in the freeze frame data or enable conditions
4. Read "DTC Status" parameter
5. Is parameter displayed "History(Not Present) fault"?

NOTE

- *History (Not Present) fault : DTC occurred but has been cleared.*
- *Present fault : DTC is occurring at present time.*

YES

▶ Fault is intermittent caused by poor contact in the sensor's and/or ECM's connector or was repaired and ECM memory was not cleared. Thoroughly check connectors for looseness, poor connection, bending, corrosion, contamination, deterioration, or damage. Repair or replace as necessary and then go to "Verification of Vehicle Repair" procedure.

NO

▶ Go to next step as below

MONITOR ACTUATION TEST E92FD6CA

NOTE

The main purpose of this test is to identify potential engine mechanical condition problems and fuel and ignition systems problems that are not common to all cylinders. For best results, perform this test while maintaining as steady an rpm reading as possible.

Caution! Before beginning tests; set the parking brake, place gear selector in P or N and block drive wheels for safety.

1. Warm up the engine to normal operating temperature and let it idle.
2. Install Scan Tool and select "INJECTOR #1" parameter on the Actuation Test mode shown in the figure.
3. Monitor engine rpm and shut off the injector #1 by pressing "STRT(F1)" key
4. Repeat procedure on all injectors and record the engine rpm.

Specification : All cylinders should show an even RPM drop.

5. Was each cylinder's rpm drop within the same value?

YES

▶ Go to "Timing Inspection" procedure

NO

▶ Cylinders with the least amount of RPM drop are not contributing their share of power. Go to "Spark plug cable Inspection" procedure.

NOTE

If the RPM loss between cylinders is quite large(200RPM or more) and engine has high mileage, there is possibility of engine wear. Perform compression test with pressure gauge to check the engine wear

SPARK PLUG CABLE INSPECTION

1. Remove suspect cylinder's spark plug cable

2. Visually/physically inspect the following items:
   - Damage, cracks and flashover

3. Measure the resistance of the spark plug cable referring to specification.

Specification : 5.6kΩ /m ±20%

NOTE

Resistance should not be higher than 10,000Ω per foot of cable. If resistance is higher than specification, replace the cable

4. Is the displayed value within the specified value?

YES

▶ Go to "Spark Plug Inspection " procedure

NO

▶ Repair as necessary and go to "Verification of Vehicle Repair" procedure

SPARK PLUG INSPECTION

1. Remove suspect cylinder's spark plugs

2. Visually/physically inspect the following items:
   - Damaged insulation, Worn electrodes, Oil or fuel fouled, Loose terminals and cracks
   - Check for plug gap : 1.0 - 1.1 mm (0.039 - 0.043 in.)
   - Check if the spark plug for the relevant cylinder is lighter in color than the other plugs.

3. Was a problem found in any of the above areas?

YES

▶ Repair as necessary and go to "Verification of Vehicle Repair" procedure

NO

▶ Go to "Fuel Injector Inspection" procedure

FUEL INJECTOR INSPECTION

1. Check the fuel injectors for clogging or any restrictions

Test Condition : Ignition "OFF"
Specification : No clogging and restriction

2. Is the fuel injector OK?

YES

▶ Visually/physically inspect the engine mechanical problem as below:
- Leaky or sticky valves or rings
- Excessive valve deposits
- Weak valve spring
- Leaking head gasket

If NG, repair as necessary and go to "Verification of Vehicle Repair" procedure
If OK, go to "Ignition Coil Inspection" procedure

NO

▶ Repair as necessary and go to "Verification of Vehicle Repair" procedure

IGNITION COIL INSPECTION

1. Ignition "OFF"

2. Ignition coil connector : Disconnect

3. Visually/physically inspect the following items:
   - Damage, cracks and flashover

4. Measure the primary coil resistance between terminals 1 and 2

SPECIFICATION :

Temp.(℃)	Temp.(℉)	Ignition primary coil (Ω)	Ignition secondary coil (kΩ)
20	68	0.56 ~ 0.68	6 ~ 8

5. Is resistance within the specified value?

YES

▶ Go to "Timing Inspection" procedure

NO

▶ Replace as necessary and go to "Verification of Vehicle Repair" procedure

TIMING INSPECTION

1. Set up an oscilloscope as follows :
   Channel A (+): terminal 3 of the CKPS, (-): ground
   Channel B (+): terminal 3 of the CMPS, (-): ground

2. Start the engine and check for signal waveform whether synchronize with camshaft sensor or not and tooth is missing refer to sample waveforms as below

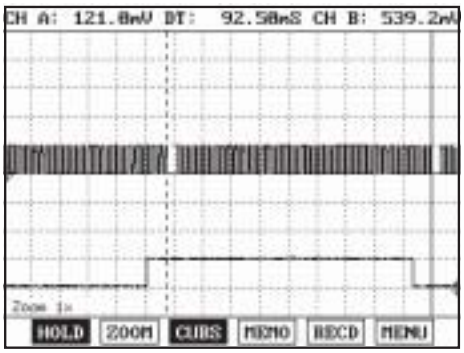

Fig.1

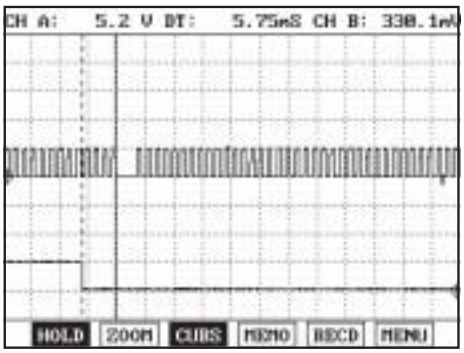

Fig.2

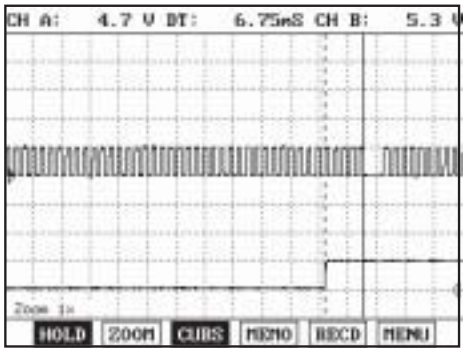

Fig.3

Fig.1) The square wave signal should be smooth and without any distortion.
Fig.2,3)The CMPS falling(rising) edge is coincided with 3~5 tooth of the CKP from one longer signal(missing tooth)

EFRF200N

3. Is the signal waveform normal?

YES

▶ Go to " Air Leakage Inspection " procedure

NO

▶ Remove Crankshaft Position Sensor(CKPS) and calculate air gap between sensor and flywheel/torque converter. Readjust as necessary and go to next step.

NOTE

Air gap [0.3~1.7 mm [0.012~0.067 in] = measure distance from housing to teeth on flywheel/torque converter (measurement "A") and from mounting surface on sensor to sensor tip (measurement "B") subtract "B" from "A"

If fail to synchronize CKPS with CMPS, check that the crankshaft and camshaft are correctly aligned the matching marks of the pulleys. Repair or readjust as necessary and go to "Verification of Vehicle Repair" procedure

AIR LEAKAGE INSPECTION EBDE79BB

1. Visually/physically inspect the air leakage in intake/exhaust system as following items,
   If OK, go to next step
   If NG, repair as necessary and go to "Verification of Vehicle Repair" procedure
   - Vacuum hoses for splits, kinks and improper connections.
   - Throttle body gasket
   - Gasket between intake manifold and cylinder head
   - Seals between intake manifold and fuel injectors
   - Exhaust system between HO2S and Three way catalyst for air leakage

2. Was a problem found in any of the above areas?

YES

▶ Go to "Fuel System Inspection" procedure

NO

▶ Repair air leakage and go to "Verification of Vehicle Repair" procedure

FUEL SYSTEM INSPECTION EC382EFA

1. Check the fuel for excessive water, alcohol, or other contaminants. Replace contaminated fuel as necessary.
2. Install a fuel pressure gage
3. Inspect fuel pressure with normal idle status

Test Condition : Ignition "ON" & Engine "ON" at Idle Specification : 250~350kPa(2.50~3.50 kg/㎠, 36~50 psi)

4. Is fuel pressure within the specified value?

YES

▶ Check for poor connection between ECM and component: backed out terminal, improper mating, broken locks or poor terminal to wire connection. Repair as necessary and go to "Verification of Vehicle Repair" procedure

NO

▶ Repair as necessary refer to inspection noted as below and go to "Verification of Vehicle Repair" procedure

VERIFICATION OF VEHICLE REPAIR E75F4DE0

After a repair, it is essential to verify that the fault has been corrected.

1. Connect scan tool and select "Diagnostic Trouble Codes(DTCs)" mode
2. Press F4(DTAL) and confirm that "DTC Readiness Flag" indicates "Complete". If not, drive the vehicle within conditions noted in the freeze frame data or enable conditions
3. Read "DTC Status" parameter
4. Is parameter displayed "History(Not Present) fault"?

YES

▶ System performing to specification at this time. Clear the DTC

NO

▶ Go to the applicable troubleshooting procedure.

DTC P0315 SEGMENT TIME ACQUISITION INCORRECT

COMPONENT LOCATION E4BBE0CE

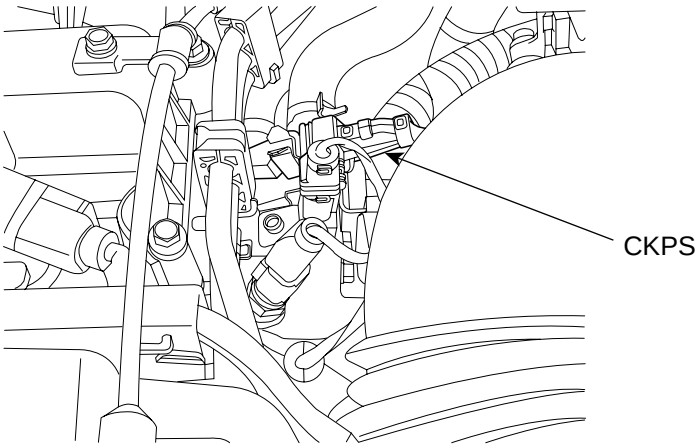

EFRF005A

GENERAL DESCRIPTION EF82AD22

The Crankshaft Position Sensor (CKPS) is a hall effect type sensor that generates voltage using a sensor and a target wheel mounted on the crankshaft; there are 58 slots in the target wheel where one is longer than the others. When the slot in the wheel aligns with the sensor, the sensor voltage outputs low. When the metal (tooth) in the wheel aligns with the sensor, the sensor voltage outputs high. During one crankshaft rotation there are 58 rectangular signals and one longer signal. The ECM calculates engine RPM by using the sensor' s signal and controls the injection duration and the ignition timing. Using the signal differences caused by the longer slot, the ECM identifies which cylinder is at top dead center.

DTC DESCRIPTION EA9EC651

The ECM sets DTC P0335 when the number of crankshaft teeth during one revolution is incorrect or crankshaft signal is missing while camshaft signal is detected.

DTC DETECTING CONDITION E98F3EBA

Item	Detecting Condition	Possible Cause
DTC Strategy	• Monitor segment time adaptation	• Misadjust crankshaft and camshaft pulley position • Faulty CKP sensor
Enable Conditions	• Engine speed is between 2000 and 3000 rpm after finishing segment time adaptation • No relevant failure	
Threshold Value	• Segment adaptation value exceeds threshold value	
Diagnostic Time	• -	

SCHEMATIC DIAGRAM EA9D4EB7

[Circuit Diagram]

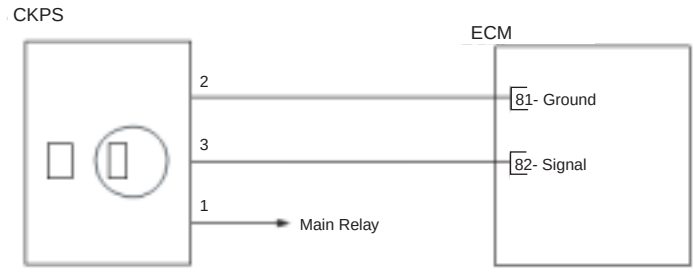

[Connection Information]

Terminal	Connected to	Funtion
1	Main Relay	Power
2	ECM Terminal 81	Ground
3	ECM Terminal 82	Signal

[Harness Connector]

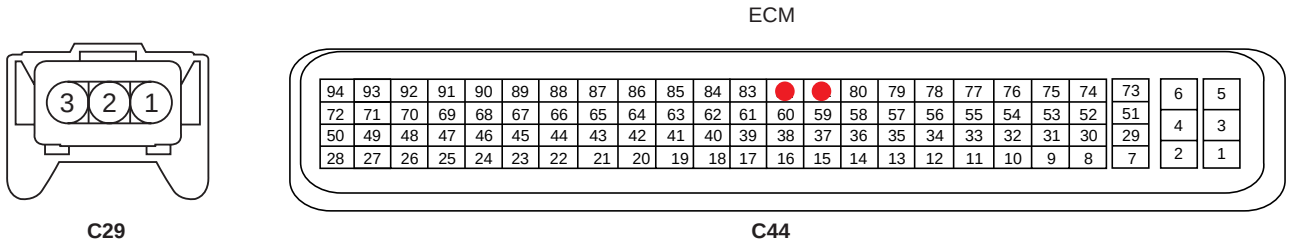

EFRF300K

SIGNAL WAVEFORM AND DATA EDBD525D

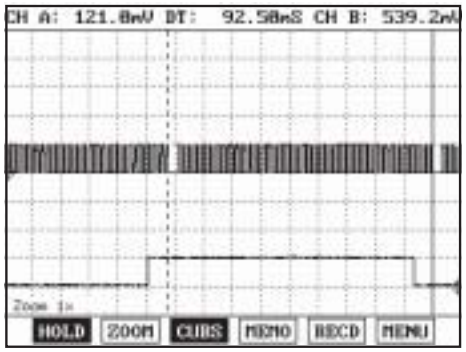

Fig.1

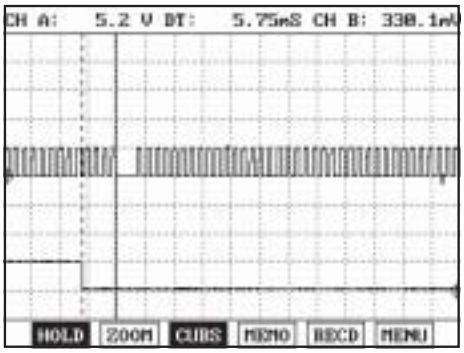

Fig.2

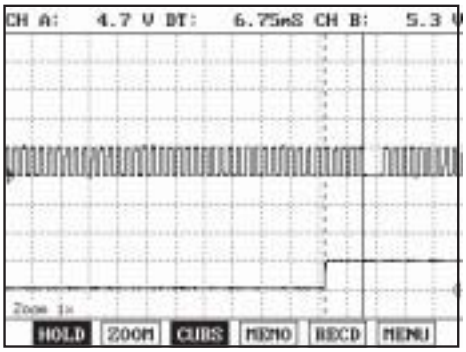

Fig.3

Fig.1) The square wave signal should be smooth and without any distortion.
Fig.2,3)The CMPS falling(rising) edge is coincided with 3~5 tooth of the CKP from one longer signal(missing tooth)

EFRF200N

MONITOR DTC STATUS E655DD16

1. Connect scan tool and select "Diagnostic Trouble Codes(DTCs)" mode

2. Press F4(DTAL) to select DTC information from the DTCs menu

3. Confirm that "DTC Readiness Flag" indicates "Complete". If not, drive the vehicle within conditions noted in the freeze frame data or enable conditions

4. Read "DTC Status" parameter

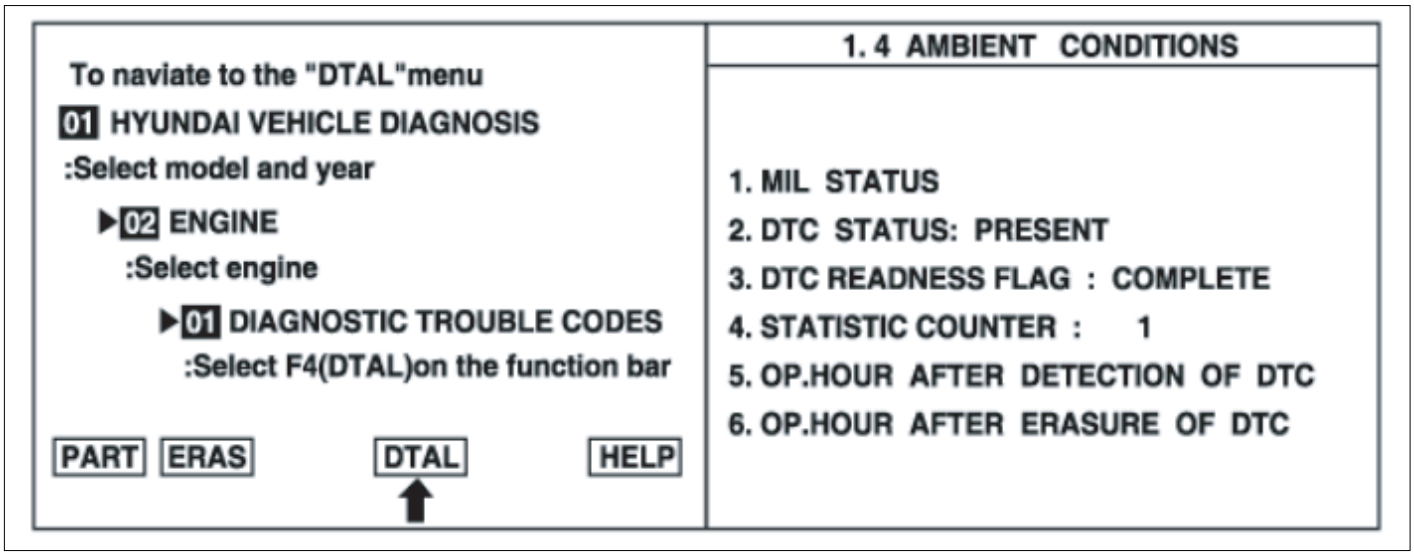

EFRF200D

5. Is parameter displayed "History(Not Present) fault"?

NOTE

- *History (Not Present) fault : DTC occurred but has been cleared.*
- *Present fault : DTC is occurring at present time.*

YES

▶ Fault is intermittent caused by poor contact in the sensor's and/or ECM's connector or was repaired and ECM memory was not cleared. Thoroughly check connectors for looseness, poor connection, bending, corrosion, contamination, deterioration, or damage. Repair or replace as necessary and then go to "Verification of Vehicle Repair" procedure.

NO

▶ Go to next step as below

COMPONENT INSPECTION EDBADEC9

1. Reconnect the CKPS and ECM connectors

2. Set up an oscilloscope as follows :
   Channel A (+): terminal 3 of the CKPS, (-): ground
   Channel B (+): terminal 3 of the CMPS, (-): ground

3. Start the engine and check for signal waveform whether synchronize with camshaft sensor or not and tooth is missing

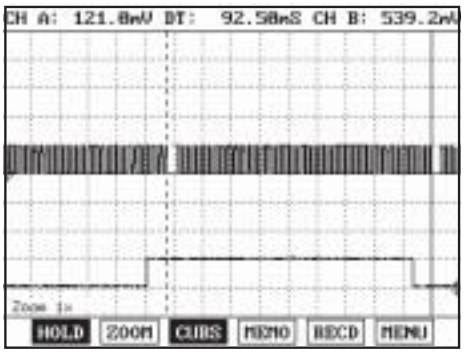

Fig.1

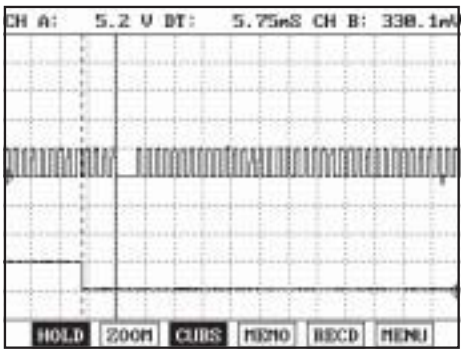

Fig.2

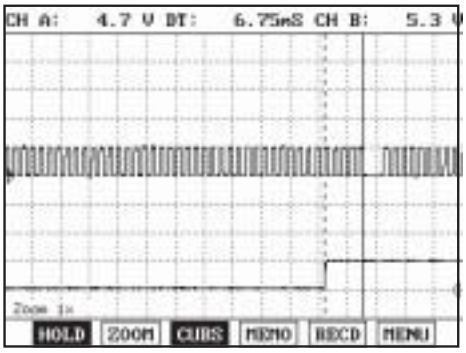

Fig.3

Fig.1) The square wave signal should be smooth and without any distortion.
Fig.2,3)The CMPS falling(rising) edge is coincided with 3~5 tooth of the CKP from one longer signal(missing tooth)

EFRF200N

4. Is the signal waveform normal?

YES

▶ Go to next step as below

NO

▶ Remove CKP and calculate air gap between sensor and flywheel/torque converter. Readjust as necessary and go to next step.

NOTE

Air gap [0.3~1.7 mm [0.012~0.067 in] = measure distance from housing to teeth on flywheel/torque converter (measurement "A") and from mounting surface on sensor to sensor tip (measurement "B") subtract "B" from "A"

▶ If fail to synchronize with CMP sensor, readjust timing system and go to next step.
▶ Check CKPS for contamination, deterioration, or damage. Substitute with a known-good CKPS and check for proper operation. If the problem is corrected, replace CKPS and then go to "Verification of Vehicle Repair" procedure

TERMINAL AND CONNECTOR INSPECTION ECF9ECAF

1. Many malfunctions in the electrical system are caused by poor harness(es) and terminals. Faults can also be caused by interference from other electrical systems, and mechanical or chemical damage.

2. Thoroughly check connectors for looseness, poor connection, bending, corrosion, contamination, deterioration, or damage.

3. Has a problem been found?

YES

▶ Repair as necessary and go to "Verification of Vehicle Repair" procedure

NO

▶ Check for poor connection between ECM and component: backed out terminal, improper mating, broken locks or poor terminal to wire connection. Repair as necessary and go to "Verification of Vehicle Repair" procedure

VERIFICATION OF VEHICLE REPAIR E57E784B

After a repair, it is essential to verify that the fault has been corrected.

1. Connect scan tool and select "Diagnostic Trouble Codes(DTCs)" mode
2. Press F4(DTAL) and confirm that "DTC Readiness Flag" indicates "Complete". If not, drive the vehicle within conditions noted in the freeze frame data or enable conditions
3. Read "DTC Status" parameter
4. Is parameter displayed "History(Not Present) fault"?

YES

▶ System performing to specification at this time. Clear the DTC

NO

▶ Go to the applicable troubleshooting procedure.

DTC P0325 KNOCK SENSOR 1 CIRCUIT

COMPONENT LOCATION EACDD6A8

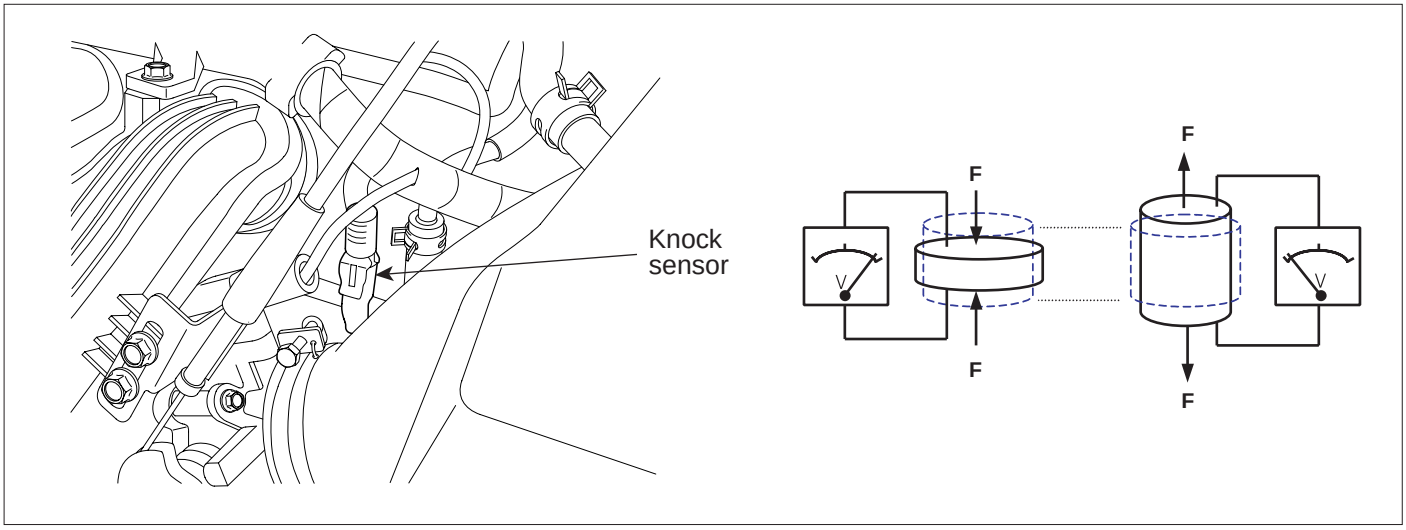

EFRF014A

GENERAL DESCRIPTION E5FE6B1C

The knock sensor is attached to the cylinder block and senses engine knocking. The sensor contains a piezoelectric element that converts vibration (or noise) into voltage signal and sends this signal to ECM. With input signals from camshaft position and crankshaft position sensor, ECM can identify which cylinder is knocking. ECM filters vibrations and determines if the vibrations are knocking signal. The Engine Control Module (ECM) uses this signal to suppress knocking by retarding ignition timing. The ECM will set a code (Malfunction Indicator Lamp will Not turn on) if during two driving cycles the Knock sensor's output voltage falls below minimum threshold. This code indicates an unexpected vibration is being read by the Knock sensor or ECM under normal engine operation.

DTC DESCRIPTION E34EB5BE

The ECM monitors the range of the analog input signal from knock sensor to check sensor failure that is short circuit or open circuit. If the difference between knock signal and noise level is smaller than the threshold during defined time period, the DTC P0325 is set. In case the noise level is higher than the upper threshold or lower than the lower threshold, the DTC P0325 is set too.

DTC DETECTING CONDITION E90F6BC9

Item	Detecting Condition	Possible Cause
DTC Strategy	• Plausibility check	• Open/short in signal or ground circuit • Contact resistance in connectors • Faulty knock sensor
Enable Conditions	• Engine idle or part load condition • Engine rpm >2688 rpm • Air mass >250mg/tdc. • No CKPS, CMPS & CAN communication error	
Threshold Value	• Integrated signal from knock sensor > 3V • Knock Signal - Noise Level < 0.08V • Noise level < 0.1V or Noise level > 4.5V	
Diagnostic Time	• 100 rev.	

SCHEMATIC DIAGRAM E0DB3FAA

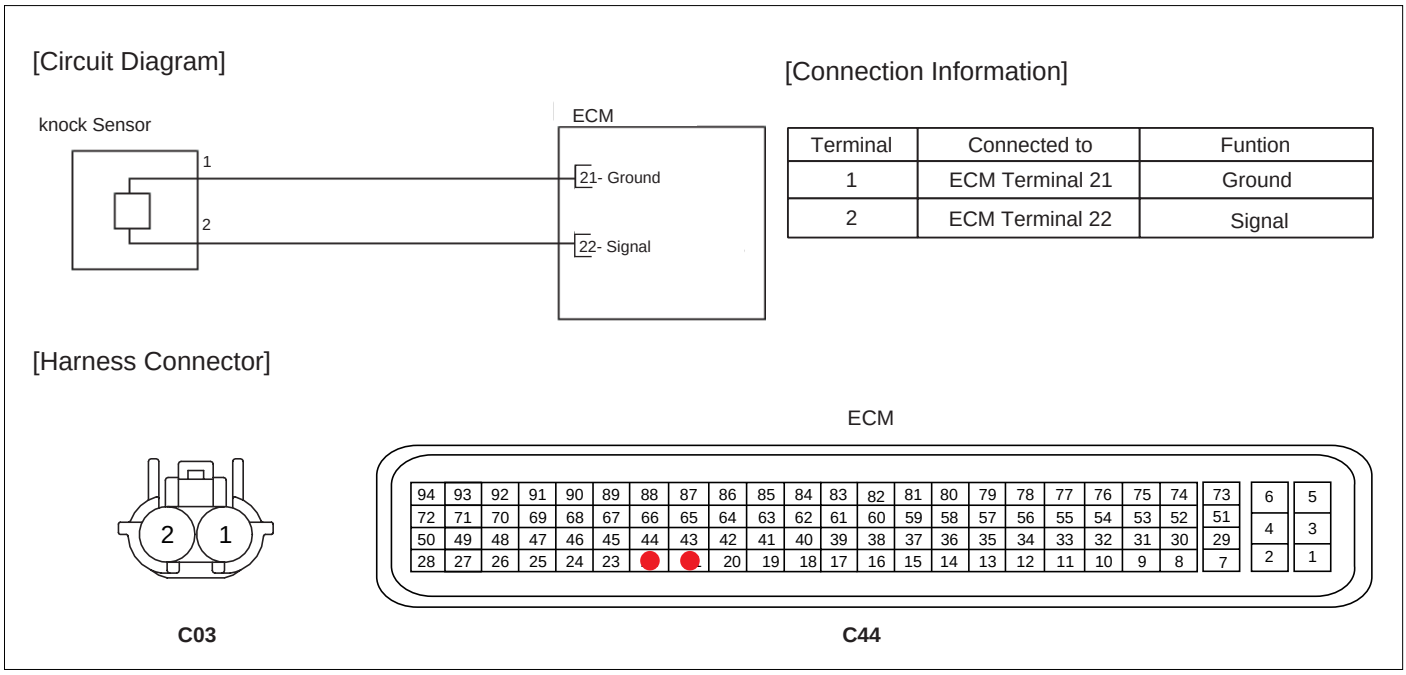

Terminal	Connected to	Funtion
1	ECM Terminal 21	Ground
2	ECM Terminal 22	Signal

EFRF300J

SIGNAL WAVEFORM AND DATA E1A43EF8

MONITOR DTC STATUS E3174211

1. Connect scan tool and select "Diagnostic Trouble Codes(DTCs)" mode
2. Press F4(DTAL) to select DTC information from the DTCs menu
3. Confirm that "DTC Readiness Flag" indicates "Complete". If not, drive the vehicle within conditions noted in the freeze frame data or enable conditions
4. Read "DTC Status" parameter

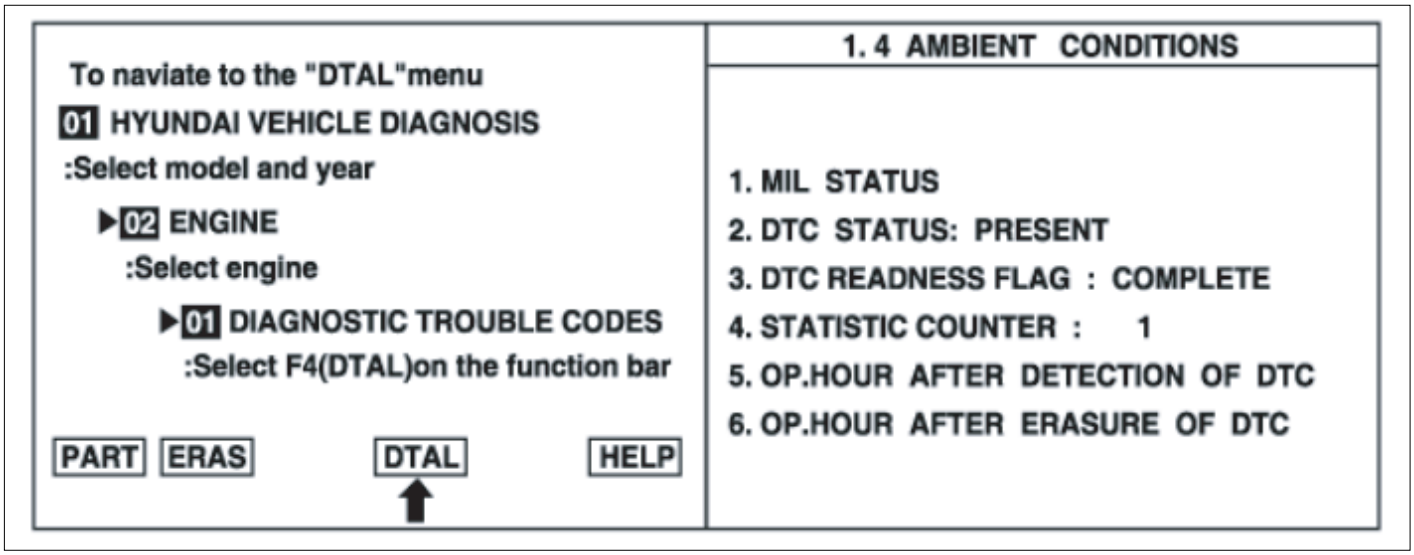

EFRF200D

5. Is parameter displayed "History(Not Present) fault"?

NOTE

- *History (Not Present) fault : DTC occurred but has been cleared.*
- *Present fault : DTC is occurring at present time.*

YES

▶ Fault is intermittent caused by poor contact in the sensor's and/or ECM's connector or was repaired and ECM memory was not cleared. Thoroughly check connectors for looseness, poor connection, bending, corrosion, contamination, deterioration, or damage. Repair or replace as necessary and then go to "Verification of Vehicle Repair" procedure.

NO

▶ Go to next step as below

TERMINAL AND CONNECTOR INSPECTION EB577A2D

1. Many malfunctions in the electrical system are caused by poor harness(es) and terminals. Faults can also be caused by interference from other electrical systems, and mechanical or chemical damage.
2. Thoroughly check connectors for looseness, poor connection, bending, corrosion, contamination, deterioration, or damage.
3. Has a problem been found?

YES

▶ Repair as necessary and go to "Verification of Vehicle Repair" procedure

NO

▶ Go to "Ground Circuit Inspection" procedure

NOTE

Go to proper wire harness inspection procedure refer to waveform as below

GROUND CIRCUIT INSPECTION E7D241CC

1. Ignition "OFF"
2. Disconnect Knock sensor and ECM connectors
3. Measure resistance between terminals 1 of the sensor harness connector and 21 of the ECM harness connector

Specification : Approx. 0Ω

4. Is resistance within the specification?

YES

▶ Go to "Signal Circuit Inspection" procedure

NO

▶ Check for an open in the ground circuit. Repair as necessary and go to "Verification of Vehicle Repair" procedure

SIGNAL CIRCUIT INSPECTION E9EE53F2

1. Check for open in signal harness

   1) Measure resistance between terminals 2 of sensor harness connector and 22 of the ECM harness connector

Specification : Approx. 0Ω

   2) Is resistance within the specification?

   YES

   ▶ Go to next step as below

   NO

   ▶ Repair as necessary and go to "Verification of Vehicle Repair" procedure.

2. Check for short to ground in signal harness

   1) Measure resistance between terminal 2 of sensor harness connector and chassis ground

Specification : Infinite

   2) Is resistance within the specification?

   YES

   ▶ Go to next step as below

   NO

   ▶ Repair as necessary and go to "Verification of Vehicle Repair" procedure.

3. Check for short to power in signal harness

   1) Ignition "ON" & Engine "OFF"

   2) Measure voltage between terminals 2 of sensor harness connector and chassis ground

Specification : Approx. 0V

   3) Is voltage within the specification?

   YES

   ▶ Go to "Component Inspection" procedure

   NO

   ▶ Repair as necessary and go to "Verification of Vehicle Repair" procedure.

COMPONENT INSPECTION E07D7192

1. Component resistance inspection

   1) Ignition Off

2) Disconnect knock sensor connector

3) Measure resistance between terminals 1 and 2 of the sensor connector(Component side)

Specification : Approx. 5MΩ at 20℃(68°F)

2. Output signal inspection

1) Remove knock sensor from vehicle and secure (across mounting boss) in a shop vise.

2) Set up an oscilloscope as follows :
Channel A (+): terminal 1 (-): terminal 2

3) Rap on vise with a ball peen hammer while monitoring oscilloscope screen (there should be a spike of less than 1 volt with each hammer strike).

Specification : knock sensor send a voltage spike with hammer strikes

3. Installation torque inspection

1) Check the installation torque of the knock sensor.

Specification : Approx. 16 ~ 28N·m(160~250 kg·cm,11.8~18.4 lb·ft)

4. Has a problem been found?

YES

▶ Check knock sensor for contamination, deterioration, or damage. Substitute with a known-good sensor and check for proper operation. If the problem is corrected, replace sensor and then go to "Verification of Vehicle Repair" procedure

NO

▶ Check for poor connection between ECM and component: backed out terminal, improper mating, broken locks or poor terminal to wire connection. Repair as necessary and go to "Verification of Vehicle Repair" procedure

VERIFICATION OF VEHICLE REPAIR E53AAE39

After a repair, it is essential to verify that the fault has been corrected.

1. Connect scan tool and select "Diagnostic Trouble Codes(DTCs)" mode

2. Press F4(DTAL) and confirm that "DTC Readiness Flag" indicates "Complete". If not, drive the vehicle within conditions noted in the freeze frame data or enable conditions

3. Read "DTC Status" parameter

4. Is parameter displayed "History(Not Present) fault"?

YES

▶ System performing to specification at this time. Clear the DTC

NO

▶ Go to the applicable troubleshooting procedure.

DTC P0335 CRANKSHAFT POSITION SENSOR A CIRCUIT

COMPONENT LOCATION E7F7F01D

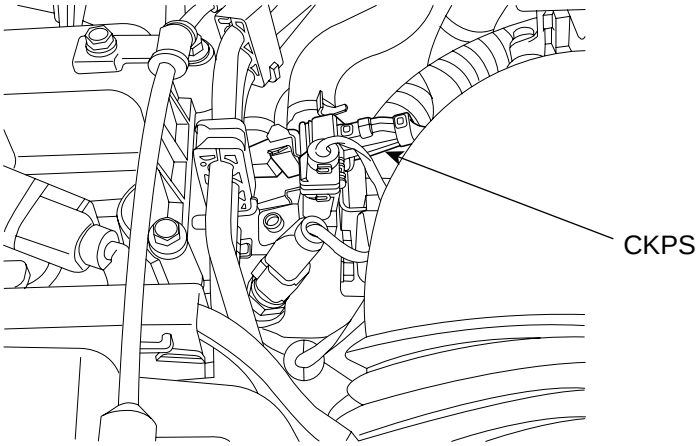

EFRF005A

GENERAL DESCRIPTION EBDCEB4C

The Crankshaft Position Sensor (CKPS) is a hall effect type sensor that generates voltage using a sensor and a target wheel mounted on the crankshaft; there are 58 slots in the target wheel where one is longer than the others. When the slot in the wheel aligns with the sensor, the sensor voltage outputs low. When the metal (tooth) in the wheel aligns with the sensor, the sensor voltage outputs high. During one crankshaft rotation there are 58 rectangular signals and one longer signal. The ECM calculates engine RPM by using the sensor' s signal and controls the injection duration and the ignition timing. Using the signal differences caused by the longer slot, the ECM identifies which cylinder is at top dead center.

DTC DESCRIPTION E8379D04

The ECM sets DTC P0335 when the number of crankshaft teeth during one revolution is incorrect or crankshaft signal is missing while camshaft signal is detected.

DTC DETECTING CONDITION E18B693A

Item		Detecting Condition	Possible Cause
DTC Strategy		• To monitor failure in crankshaft signal during synchronization	• Open or short in signal, ground or power supply circuit • Contact resistance in connectors • Damage to the connecting flange/flywheel • Misadjust crankshaft and camshaft pulley position • Faulty CKP sensor
Enable Conditions	Case1	• Crankshaft acquisition synchronized • 512rpm < Engine speed	
	Case2	• Engine running	
	Case3	• Crankshaft acquisition synchronized	
Threshold Value	Case1	• Missing or additional teeth found during one engine revolution	
	Case2	• tooth period out of range	
	Case3	• Number of tolerated missing/additional teeth exceeded during one engine revolution	
Diagnostic Time		• 5 rev.	

SCHEMATIC DIAGRAM E8F9ECA8

[Circuit Diagram]

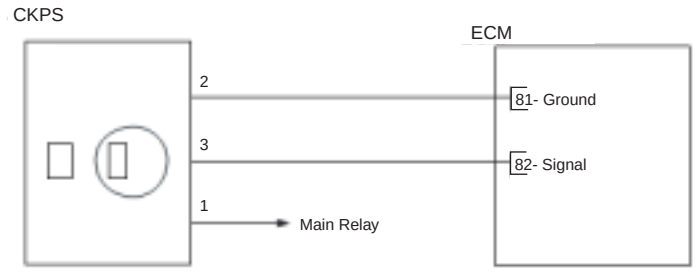

[Connection Information]

Terminal	Connected to	Funtion
1	Main Relay	Power
2	ECM Terminal 81	Ground
3	ECM Terminal 82	Signal

[Harness Connector]

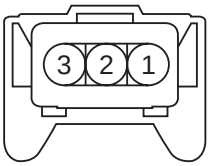

C29

ECM

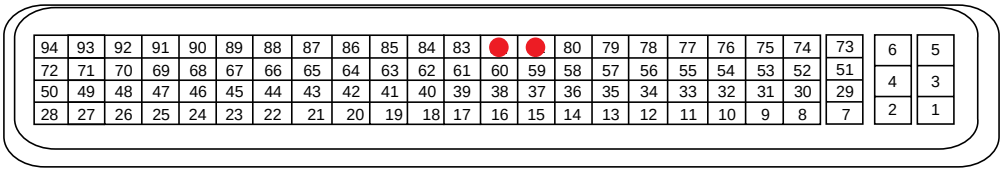

C44

EFRF300K

SIGNAL WAVEFORM AND DATA EAD00B2A

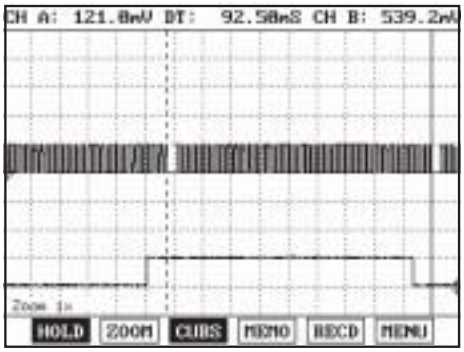

Fig.1

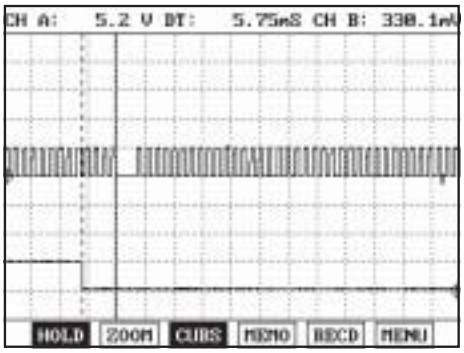

Fig.2

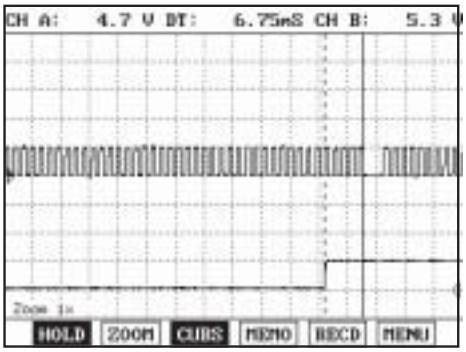

Fig.3

Fig.1) The square wave signal should be smooth and without any distortion.
Fig.2,3)The CMPS falling(rising) edge is coincided with 3~5 tooth of the CKP from one longer signal(missing tooth)

EFRF200N

MONITOR DTC STATUS E7DBAF1A

1. Connect scan tool and select "Diagnostic Trouble Codes(DTCs)" mode

2. Press F4(DTAL) to select DTC information from the DTCs menu

3. Confirm that "DTC Readiness Flag" indicates "Complete". If not, drive the vehicle within conditions noted in the freeze frame data or enable conditions

4. Read "DTC Status" parameter

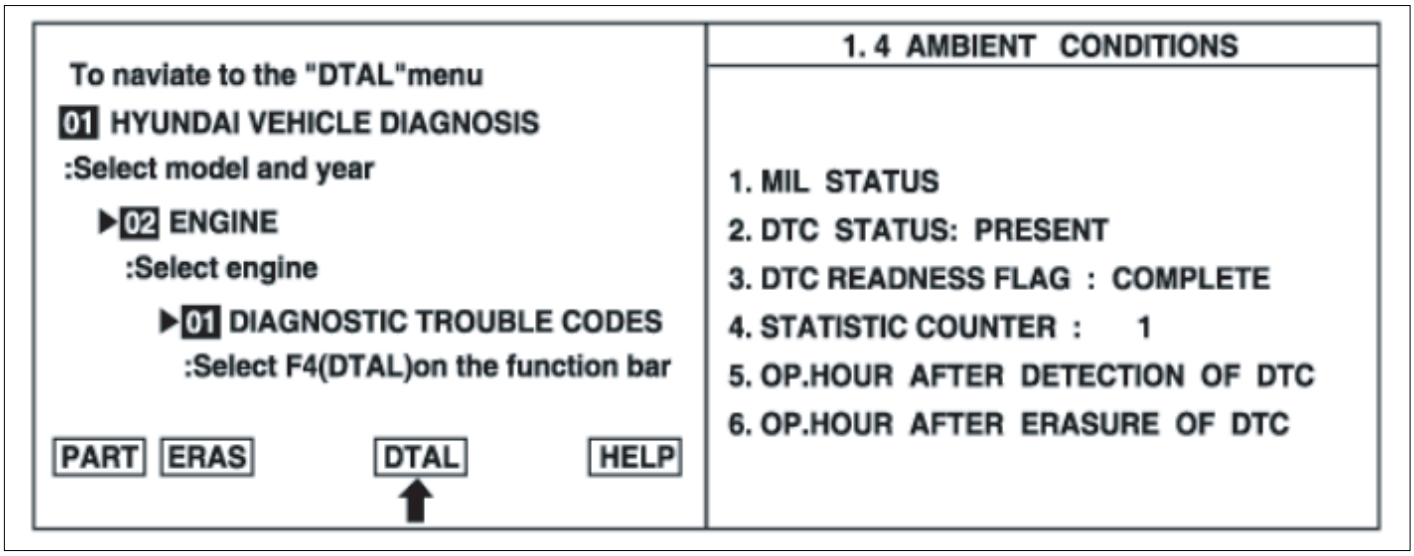

EFRF200D

5. Is parameter displayed "History(Not Present) fault"?

NOTE

- *History (Not Present) fault : DTC occurred but has been cleared.*
- *Present fault : DTC is occurring at present time.*

YES

▶ Fault is intermittent caused by poor contact in the sensor's and/or ECM's connector or was repaired and ECM memory was not cleared. Thoroughly check connectors for looseness, poor connection, bending, corrosion, contamination, deterioration, or damage. Repair or replace as necessary and then go to "Verification of Vehicle Repair" procedure.

NO

▶ Go to next step as below

TERMINAL AND CONNECTOR INSPECTION E05A77FD

1. Many malfunctions in the electrical system are caused by poor harness(es) and terminals. Faults can also be caused by interference from other electrical systems, and mechanical or chemical damage.

2. Thoroughly check connectors for looseness, poor connection, bending, corrosion, contamination, deterioration, or damage.

3. Has a problem been found?

YES

▶ Repair as necessary and go to "Verification of Vehicle Repair" procedure

NO

▶ Go to "Power Circuit Inspection" procedure

POWER CIRCUIT INSPECTION EDEFFCA0

1. Ignition "OFF"
2. Disconnect CKP sensor connector
3. Ignition "ON" & Engine "OFF"
4. Measure voltage between terminal 1 of the sensor harness connector and chassis ground

Specification : Approx. B+

5. Is voltage within the specification?

YES

▶ Go to "Ground Circuit Inspection" procedure

NO

▶ Check for a open in the power supply circuit between the main relay and the CKPS
Repair as necessary and go to "Verification of Vehicle Repair" procedure

GROUND CIRCUIT INSPECTION EE00704C

1. Ignition "OFF"
2. Measure resistance between terminal 2 of the sensor harness connector and chassis ground

Specification : Approx. 0Ω

3. Is resistance within the specification?

YES

▶ Go to "Signal Circuit Inspection" procedure

NO

▶ Check for an open in the ground circuit. Repair as necessary and go to "Verification of Vehicle Repair" procedure

SIGNAL CIRCUIT INSPECTION EA2F1AFC

1. Ignition "ON" & Engine "OFF"
2. Measure voltage between terminal 3 of the sensor harness connector and chassis ground

Specification : Approx. 5V

Is voltage within the specification?

YES

▶ Go to next step as below

NO

▶ Check for open or short circuit or poor connection. Repair as necessary and go to "Verification of Vehicle Repair" procedure.

COMPONENT INSPECTION E5DF2358

1. Reconnect the CKPS and ECM connectors

2. Set up an oscilloscope as follows :
   Channel A (+): terminal 3 of the CKPS, (-): ground
   Channel B (+): terminal 3 of the CMPS, (-): ground

3. Start the engine and check for signal waveform whether synchronize with camshaft sensor or not and tooth is missing

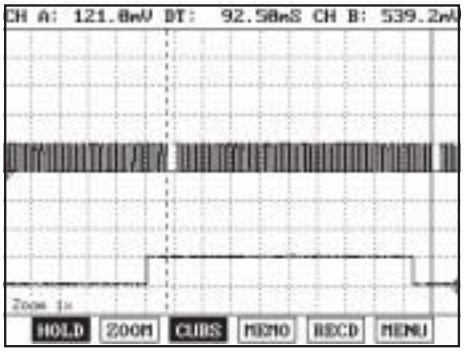

Fig.1

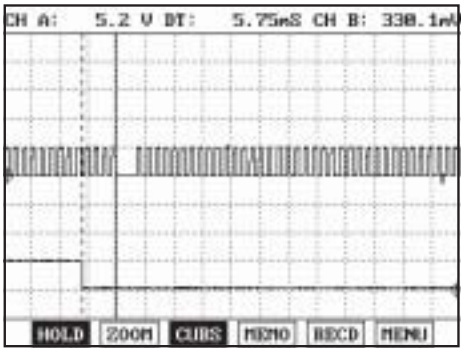

Fig.2

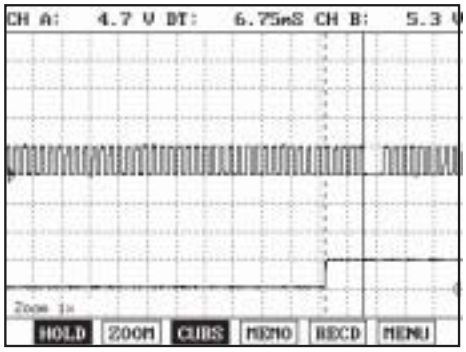

Fig.3

Fig.1) The square wave signal should be smooth and without any distortion.
Fig.2,3)The CMPS falling(rising) edge is coincided with 3~5 tooth of the CKP from one longer signal(missing tooth)

EFRF200N

4. Is the signal waveform normal?

YES

▶ Check for poor connection between ECM and component: backed out terminal, improper mating, broken locks or poor terminal to wire connection. Repair as necessary and go to "Verification of Vehicle Repair" procedure

NO

▶ Remove CKP and calculate air gap between sensor and flywheel/torque converter. Readjust as necessary and go to next step.

NOTE

Air gap [0.3~1.7 mm [0.012~0.067 in] = measure distance from housing to teeth on flywheel/torque converter (measurement "A") and from mounting surface on sensor to sensor tip (measurement "B") subtract "B" from "A"

If fail to synchronize with CMP sensor, readjust timing system and go to next step.
Check CKPS for contamination, deterioration, or damage. Substitute with a known-good CKPS and check for proper operation. If the problem is corrected, replace CKPS and then go to "Verification of Vehicle Repair" procedure

VERIFICATION OF VEHICLE REPAIR EEA6AEAF

After a repair, it is essential to verify that the fault has been corrected.

1. Connect scan tool and select "Diagnostic Trouble Codes(DTCs)" mode

2. Press F4(DTAL) and confirm that "DTC Readiness Flag" indicates "Complete". If not, drive the vehicle within conditions noted in the freeze frame data or enable conditions

3. Read "DTC Status" parameter

4. Is parameter displayed "History(Not Present) fault"?

YES

▶ System performing to specification at this time. Clear the DTC

NO

▶ Go to the applicable troubleshooting procedure.

DTC P0336 CRANKSHAFT POSITION SENSOR A CIRCUIT RANGE/PERFORMANCE

COMPONENT LOCATION E2E0DA28

Refer to DTC P0335.

GENERAL DESCRIPTION E24F2BE1

Refer to DTC P0335.

DTC DESCRIPTION EDB389AC

The ECM sets DTC P0336 when the crankshaft signal is missing while camshaft signal is detected.

DTC DETECTING CONDITION EA729EEF

Item	Detecting Condition	Possible Cause
DTC Strategy	• Plausibility check	• Open or short in signal, ground or power supply circuit • Contact resistance in connectors • Damage to the connecting flange/flywheel • Misadjust crankshaft and camshaft pulley position • Faulty CKP sensor
Enable Conditions	• Engine running • First active edge detected	
Threshold Value	• No first edge detection after reference gap during 3 CAM shaft edge counter detected	
Diagnostic Time	• 3 rev.	

SCHEMATIC DIAGRAM ED485217

Refer to DTC P0335.

SIGNAL WAVEFORM AND DATA E7B2B669

Refer to DTC P0335.

MONITOR DTC STATUS ECD5C028

Refer to DTC P0335.

TERMINAL AND CONNECTOR INSPECTION E4A0714C

1. Many malfunctions in the electrical system are caused by poor harness(es) and terminals. Faults can also be caused by interference from other electrical systems, and mechanical or chemical damage.

2. Thoroughly check connectors for looseness, poor connection, bending, corrosion, contamination, deterioration, or damage.

3. Has a problem been found?

YES

▶ Repair as necessary and go to "Verification of Vehicle Repair" procedure

NO

▶ Go to "Component Inspection" procedure

COMPONENT INSPECTION EA81E59B

Refer to DTC P0335.

VERIFICATION OF VEHICLE REPAIR E3FBCA1C

Refer to DTC P0335.

DTC P0340 CAMSHAFT POSITION SENSOR A CIRCUIT MALFUNCTION(SINGLE SENSOR)

COMPONENT LOCATION E3ADB74C

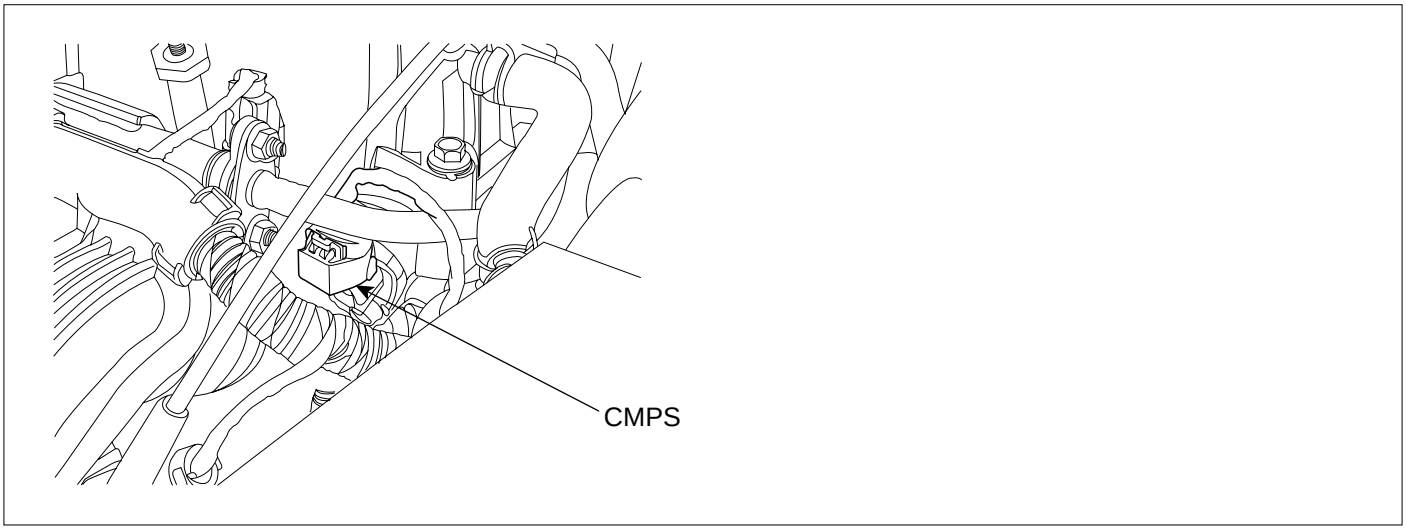

EFRF006A

GENERAL DESCRIPTION E330BEBB

The Camshaft Position Sensor (CMPS) is a sensor that detects the compression TDC of the NO. 1 cylinder. The CMPS consists of a hall type sensor and a target on the end of the intake camshaft. When the target triggers the sensor, the sensor voltage is 5V. If not, the sensor voltage is 0V. These CMPS signal is sent to the ECM and the ECM uses the CMPS signal for synchronizing the firing of sequential fuel injectors.

DTC DESCRIPTION E7196881

The ECM monitors the camshaft sensor signal transition position which must change only once per crankshaft revolution. If no camshaft signal is detected while crankshaft signal is detected, the ECM sets DTC P0340.

DTC DETECTING CONDITION EAC94674

Item		Detecting Condition	Possible Cause
DTC Strategy	Case1	• Plausibility check	• Open or short in signal, ground or power supply circuit • Contact resistance in connectors • Misadjust crankshaft and camshaft pulley position • Faulty CMP sensor
	Case2	• To monitor failure in camshaft signal during synchronization	
Enable Conditions		• Crankshaft acquisition synchronized • First active edge detected	
Thresh-old Value	Case1	• CAM edge ratio out of range	
	Case2	• CAM shaft segment period out of range • Camshaft signal not valid for crankshaft synchronization • CAM shaft segment ratio out of range	
Diagnos-tic Time	Case1	• 5 rev.	
	Case2	• 3 rev.	

SCHEMATIC DIAGRAM EB573CC8

[Circuit Diagram]

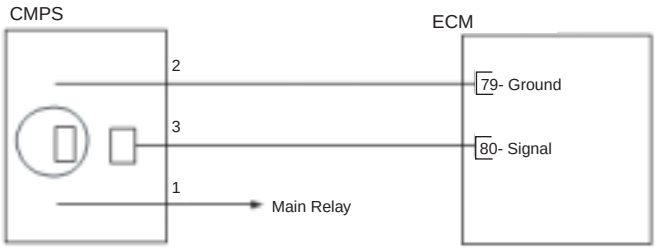

[Connection Information]

Terminal	Connected to	Funtion
1	Main Relay	Power
2	ECM Terminal 79	Ground
3	ECM Terminal 80	Signal

[Harness Connector]

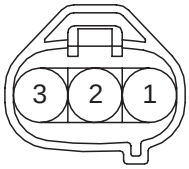

C05

ECM

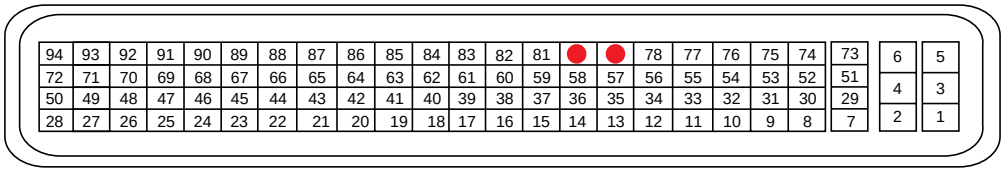

C44

EFRF300L

SIGNAL WAVEFORM AND DATA EE0F82D9

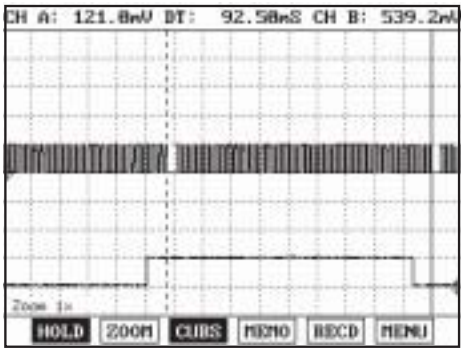

Fig.1

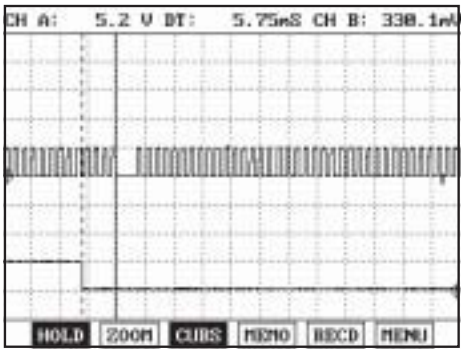

Fig.2

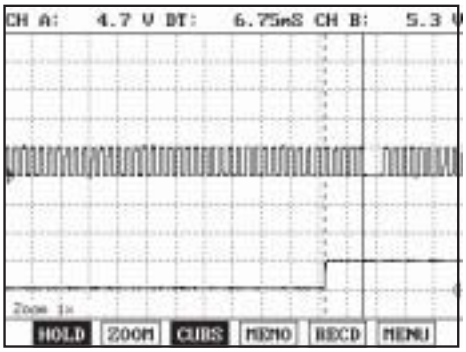

Fig.3

Fig.1) The square wave signal should be smooth and without any distortion.
Fig.2,3)The CMPS falling(rising) edge is coincided with 3~5 tooth of the CKP from one longer signal(missing tooth)

EFRF200N

MONITOR DTC STATUS E486021B

1. Connect scan tool and select "Diagnostic Trouble Codes(DTCs)" mode

2. Press F4(DTAL) to select DTC information from the DTCs menu

3. Confirm that "DTC Readiness Flag" indicates "Complete". If not, drive the vehicle within conditions noted in the freeze frame data or enable conditions

4. Read "DTC Status" parameter

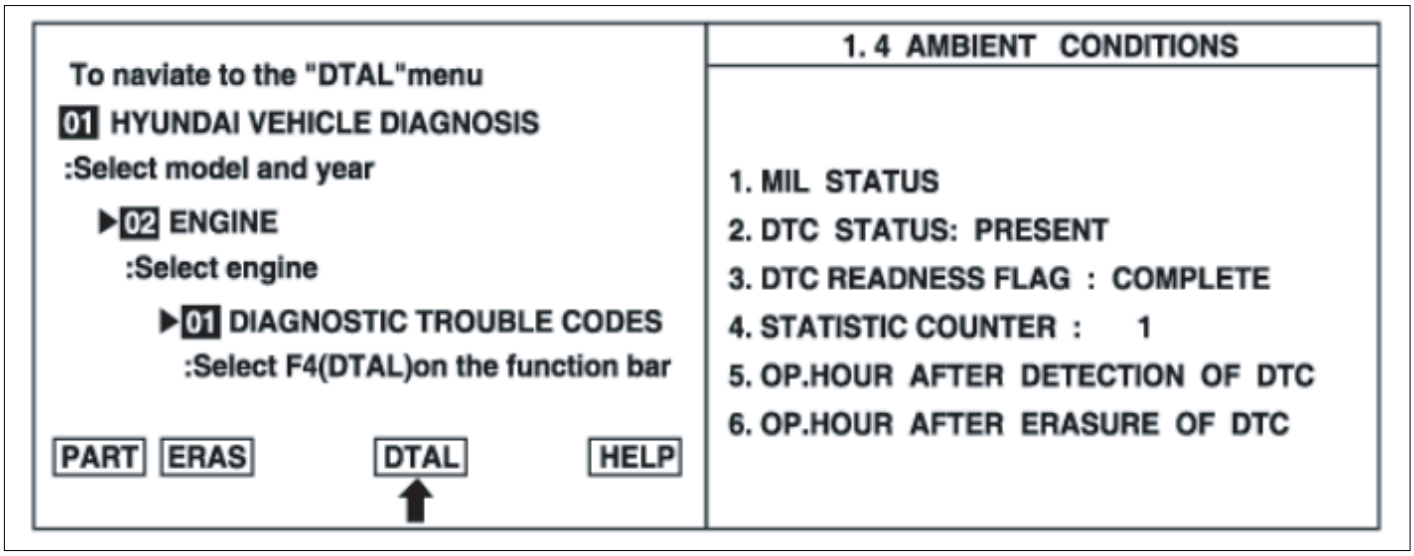

EFRF200D

5. Is parameter displayed "History(Not Present) fault"?

NOTE

- *History (Not Present) fault : DTC occurred but has been cleared.*
- *Present fault : DTC is occurring at present time.*

YES

▶ Fault is intermittent caused by poor contact in the sensor's and/or ECM's connector or was repaired and ECM memory was not cleared. Thoroughly check connectors for looseness, poor connection, bending, corrosion, contamination, deterioration, or damage. Repair or replace as necessary and then go to "Verification of Vehicle Repair" procedure.

NO

▶ Go to next step as below

TERMINAL AND CONNECTOR INSPECTION E7A5D586

1. Many malfunctions in the electrical system are caused by poor harness(es) and terminals. Faults can also be caused by interference from other electrical systems, and mechanical or chemical damage.

2. Thoroughly check connectors for looseness, poor connection, bending, corrosion, contamination, deterioration, or damage.

3. Has a problem been found?

YES

▶ Repair as necessary and go to "Verification of Vehicle Repair" procedure

NO

▶ Go to "Power Circuit Inspection" procedure

POWER CIRCUIT INSPECTION E8AFA15F

1. Ignition "OFF"
2. Disconnect CMP sensor connector
3. Ignition "ON" & Engine "OFF"
4. Measure voltage between terminal 1 of the sensor harness connector and chassis ground

Specification : Approx. B+

5. Is voltage within the specification?

YES

▶ Go to "Ground Circuit Inspection" procedure

NO

▶ Check for a open in the power supply circuit between the main relay and the CMPS
Especially check for open or blown 10A sensor fuse
Repair as necessary and go to "Verification of Vehicle Repair" procedure

GROUND CIRCUIT INSPECTION E5A2239B

1. Ignition "OFF"
2. Measure resistance between terminal 2 of the sensor harness connector and chassis ground

Specification : Approx. 0Ω

3. Is resistance within the specification?

YES

▶ Go to "Signal Circuit Inspection" procedure

NO

▶ Check for an open or short to battery in the ground circuit.
Repair as necessary and go to "Verification of Vehicle Repair" procedure

SIGNAL CIRCUIT INSPECTION E2D8A257

1. Check for open in signal harness
   1) Disconnect ECM connector
   2) Measure resistance between terminals 3 of sensor harness connector and 80 of the ECM connector

Specification : Approx. 0Ω

3) Is resistance within the specification?

YES

▶ Go to next step as below

NO

▶ Repair as necessary and go to "Verification of Vehicle Repair" procedure.

2. Check for short to ground in signal harness

1) Measure resistance between terminal 3 of sensor harness connector and chassis ground

Specification : Infinite

2) Is resistance within the specification?

YES

▶ Go to next step as below

NO

▶ Repair as necessary and go to "Verification of Vehicle Repair" procedure.

3. Check for short to battery in signal harness

1) Ignition "ON" & Engine "OFF"

2) Measure voltage between terminal 3 of sensor harness connector and chassis ground

Specification : Approx. 0V

3) Is voltage within the specification?

YES

▶ Go to "Component Inspection" procedure

NO

▶ Repair as necessary and go to "Verification of Vehicle Repair" procedure.

COMPONENT INSPECTION E106E86C

1. Reconnect the CKPS and ECM connectors

2. Set up an oscilloscope as follows :
Channel A (+): terminal 3 of the CKPS, (-): ground
Channel B (+): terminal 3 of the CMPS, (-): ground

3. Start the engine and check for signal waveform whether synchronize with camshaft sensor or not and tooth is missing

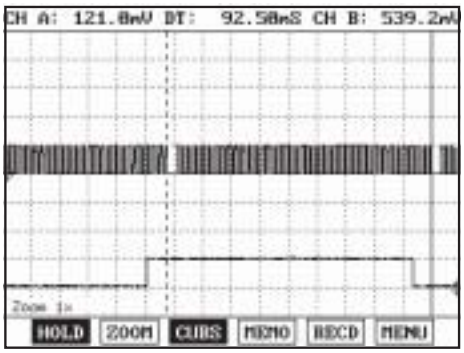

Fig.1

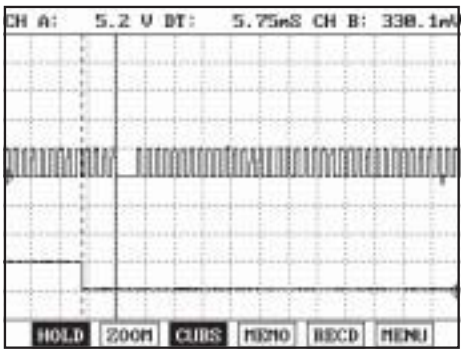

Fig.2

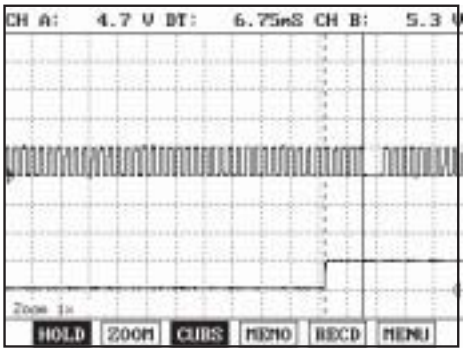

Fig.3

Fig.1) The square wave signal should be smooth and without any distortion.
Fig.2,3)The CMPS falling(rising) edge is coincided with 3~5 tooth of the CKP from one longer signal(missing tooth)

EFRF200N

4. Is the signal waveform normal?

YES

▶ Check for poor connection between ECM and component: backed out terminal, improper mating, broken locks or poor terminal to wire connection. Repair as necessary and go to "Verification of Vehicle Repair" procedure

NO

▶ Remove CMP and calculate air gap[1.8mm(0.07in)]. Readjust and repair as necessary and go to "Verification of Vehicle Repair" procedure. If OK, check CMPS for contamination, deterioration, or damage. Substitute with a known-good CMPS and check for proper operation. If the problem is corrected, replace CMPS and then go to "Verification of Vehicle Repair" procedure

VERIFICATION OF VEHICLE REPAIR E1933307

After a repair, it is essential to verify that the fault has been corrected.

1. Connect scan tool and select "Diagnostic Trouble Codes(DTCs)" mode
2. Press F4(DTAL) and confirm that "DTC Readiness Flag" indicates "Complete". If not, drive the vehicle within conditions noted in the freeze frame data or enable conditions
3. Read "DTC Status" parameter
4. Is parameter displayed "History(Not Present) fault"?

YES

▶ System performing to specification at this time. Clear the DTC

NO

▶ Go to the applicable troubleshooting procedure.

DTC P0341 CAMSHAFT POSITION SENSOR A CIRCUIT RANGE/PERFORMANCE(SINGLE SENSOR)

COMPONENT LOCATION E593BCC2

Refer to DTC P0340.

GENERAL DESCRIPTION E20E17B1

Refer to DTC P0340.

DTC DESCRIPTION EACD2A2E

The ECM monitors the camshaft sensor signal transition position which must change only once per crankshaft revolution. If camshaft signal is abnormal, the ECM sets DTC P0341.

DTC DETECTING CONDITION E66A2083

Item	Detecting Condition	Possible Cause
DTC Strategy	• Plausibility check - Mechanical CVVT system error	• Contact resistance in connectors • Misadjust crankshaft and camshaft pulley position • Faulty CMP sensor
Enable Conditions	• No CKPS & CMPS error • No engine stop • Reference position adaptation for active CVVT operation finished	
Threshold Value	• Actual CAM position exceeds threshold value	
Diagnostic Time	• 1sec.	

SCHEMATIC DIAGRAM EB0B526B

Refer to DTC P0340.

SIGNAL WAVEFORM AND DATA EB3AEFD5

Refer to DTC P0340.

MONITOR DTC STATUS E08C7C8D

Refer to DTC P0340.

TERMINAL AND CONNECTOR INSPECTION EA4D9AF7

1. Many malfunctions in the electrical system are caused by poor harness(es) and terminals. Faults can also be caused by interference from other electrical systems, and mechanical or chemical damage.

2. Thoroughly check connectors for looseness, poor connection, bending, corrosion, contamination, deterioration, or damage.

3. Has a problem been found?

YES

▶ Repair as necessary and go to "Verification of Vehicle Repair" procedure

NO

▶ Go to "Component Inspection" procedure

COMPONENT INSPECTION E41805BB

Refer to DTC P0340.

VERIFICATION OF VEHICLE REPAIR E9A7088C

Refer to DTC P0340.

DTC P0420 CATALYST SYSTEM EFFICIENCY BELOW THRESHOLD (BANK 1)

GENERAL DESCRIPTION EEBCD4EE

The ECM uses dual oxygen sensors to monitor the efficiency of the manifold catalytic converter (warm-up catalytic converter). By monitoring the oxygen storage capacity of a catalyst, its efficiency can be indirectly calculated. The upstream (front) HO2S is used to detect the amount of oxygen in the exhaust gas before it enters the catalytic converter. A low voltage indicates high oxygen contents (lean air mixture). A high voltage indicates low oxygen contents (rich air mixture). When the catalyst efficiency drops, no chemical reaction takes place. This means the concentration of oxygen will be the same at the rear as it is at the front. The output voltage of the rear HO2S copies the voltage of the front HO2S.To monitor the system, the lean-to-rich switches of the front HO2S to the rear HO2S is counted. The ratio of rear switches to front switches is used to determine whether the catalyst is operating properly. An effective catalyst will have fewer rear switches than front switches, that is, a ratio closer to zero.

DTC DESCRIPTION E0725C72

The ECM calculates oscillation size of rear HO2S signal which represents catalyst conversion properties. This oscillation size will determine if catalyst conversion is low due to aging or poisoning from leaded fuel or misfiring. The ECM sets P0420 if the average of calculated oscillation size of rear HO2S signal during predetermined duration is higher than the predetermined threshold.

DTC DETECTING CONDITION EB3E342D

Item	Detecting Condition	Possible Cause
DTC Strategy	• Comparison of the signal ratio of upstream and downstream O2 sensor in a load and speed range	• Exhaust gas leaks • Faulty rear HO2S • Faulty three way catalyst converter
Enable Conditions	• Coolant temperature >74°C(165°F) • Catalyst temp. model is in predetermined range • Vehicle speed is in predetermined range • Mass air flow s in predetermined range • 11V< Battery voltage < 16 • Lambda regulation active • In part load status • No relevant failure	
Threshold Value	• Emission level exceeds threshold value	
Diagnostic Time	• 20 Forced stimulation cycles	

MONITOR DTC STATUS EDCFEE34

NOTE

If any codes relating to injectors, HO2S, ECT(Engine Coolant Temperature)Sensor, Throttle Position sensor or Mass Air Flow Sensor are stored, do ALL REPAIRS associated with those codes before proceeding with this troubleshooting tree.

1. Connect scan tool and select "Diagnostic Trouble Codes(DTCs)" mode
2. Press F4(DTAL) to select DTC information from the DTCs menu
3. Confirm that "DTC Readiness Flag" indicates "Complete". If not, drive the vehicle within conditions noted in the freeze frame data or enable conditions
4. Read "DTC Status" parameter

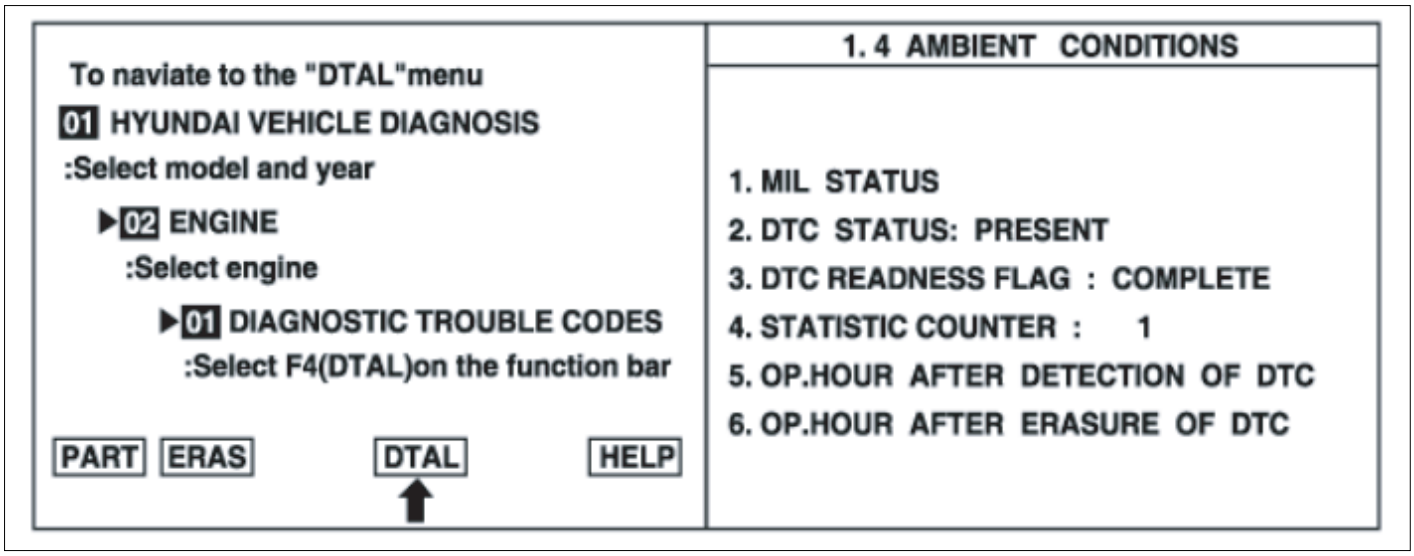

EFRF200D

5. Is parameter displayed "History(Not Present) fault"?

NOTE

- *History (Not Present) fault : DTC occurred but has been cleared.*
- *Present fault : DTC is occurring at present time.*

YES

▶ Fault is intermittent caused by poor contact in the sensor's and/or ECM's connector or was repaired and ECM memory was not cleared. Thoroughly check connectors for looseness, poor connection, bending, corrosion, contamination, deterioration, or damage. Repair or replace as necessary and then go to "Verification of Vehicle Repair" procedure.

NO

▶ Go to "System Inspection" procedure

EXHAUST SYSTEM INSPECTION EC2F214E

1. Visually/physically inspect the following conditions:
   - Exhaust system between HO2S and Three way catalyst for air leakage
   - Damage, and for loose or missing hardware:

2. Was a problem found in any of the above areas?

YES

▶ Repair as necessary and go to "Verification of Vehicle Repair" procedure

NO

▶ Go to "Rear HO2S Inspection " procedure

REAR HO2S INSPECTION

1. Visually/physically inspect the rear HO2S for the following conditions:
   - Ensure that the HO2S is securely installed.(Pigtail and wiring harness not making contact with the exhaust pipe)
   - Check for corrosion on terminals

- Check for terminal tension (at the HO2S and at the ECM)
- Any road damage

2. Was a problem found in any of the above areas?

YES

▶ Repair as necessary and go to "Verification of Vehicle Repair" procedure

NO

▶ Go to "TWC Inspection " procedure

TWC INSPECTION

1. Visually/physically inspect the three-way catalyst(TWC) converter for the following damage:
   - Severe discoloration caused by excessive temperature
   - Dents and holes
   - Internal rattle caused by a damaged catalyst

2. Also, ensure that the TWC is a proper original equipment manufacturer part.

3. Was a problem found?

YES

▶ Replace TWC and go to "Verification of Vehicle Repair" procedure

NO

▶ Check for poor connection between ECM and component: backed out terminal, improper mating, broken locks or poor terminal to wire connection. Repair as necessary and go to "Verification of Vehicle Repair" procedure

VERIFICATION OF VEHICLE REPAIR EA18F139

After a repair, it is essential to verify that the fault has been corrected.

1. Connect scan tool and select "Diagnostic Trouble Codes(DTCs)" mode

2. Press F4(DTAL) and confirm that "DTC Readiness Flag" indicates "Complete". If not, drive the vehicle within conditions noted in the freeze frame data or enable conditions

3. Read "DTC Status" parameter

4. Is parameter displayed "History(Not Present) fault"?

YES

▶ System performing to specification at this time. Clear the DTC

NO

▶ Go to the applicable troubleshooting procedure.

DTC P0444 EVAP. EMISSION SYSTEM-PURGE CTRL. VALVE CIRCUIT OPEN

COMPONENT LOCATION E44B430C

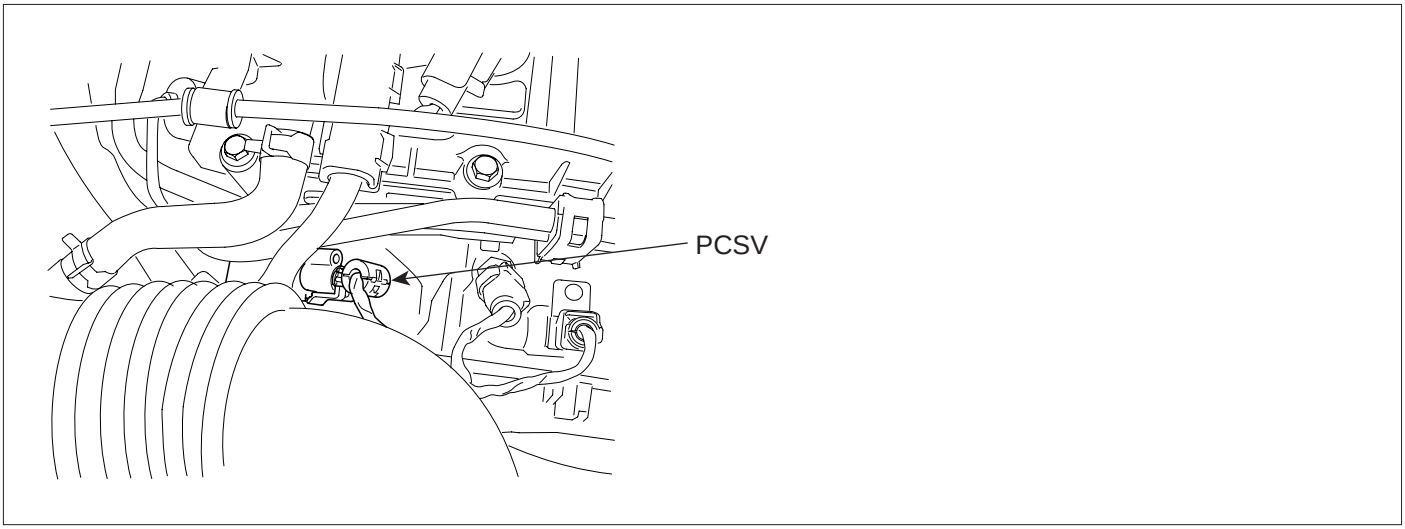

EFRF020A

GENERAL DESCRIPTION E51AF0DD

The evaporative emission control system prevents hydrocarbon (HC) vapors from the fuel tank from escaping into the atmosphere where they could form photochemical smog. Gasoline vapors are collected in the charcoal canister. The ECM controls the Purge Control Solenoid Valve (PCSV) to purge any collected vapors from the canister back to the engine for combustion. This valve is actuated by the purge control signal from the ECM and controls fuel vapor flow from the canister to the intake manifold.

DTC DESCRIPTION EBC3C8BD

ECM sets DTC P0444 if the ECM detects that the PCSV control circuit is open.

DTC DETECTING CONDITION E5FADA11

Item	Detecting Condition	Possible Cause
DTC Strategy	• Electrical Check	• Open in PCSV harness • Contact resistance in connectors • Faulty PCSV
Enable Conditions	• 6V < Battery voltage • Ignition "ON"	
Threshold Value	• Open in control circuit	
Diagnostic Time	• 6sec.	

SPECIFICATION E50AEFF9

Temp.(℃)	Temp.(℉)	PCSV Resistance(Ω)
20	68	19 ~ 22

SCHEMATIC DIAGRAM EAE470E6

[Circuit Diagram]

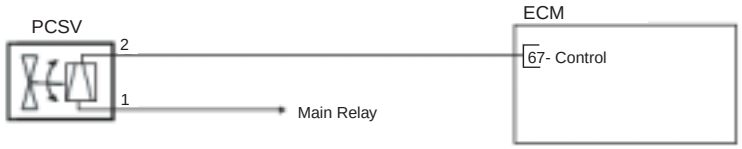

[Connection Information]

Terminal	Connected to	Funtion
1	Main Relay	Power
2	ECM Terminal 67	PCSV

[Harness Connector]

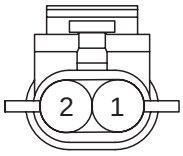

C20

ECM

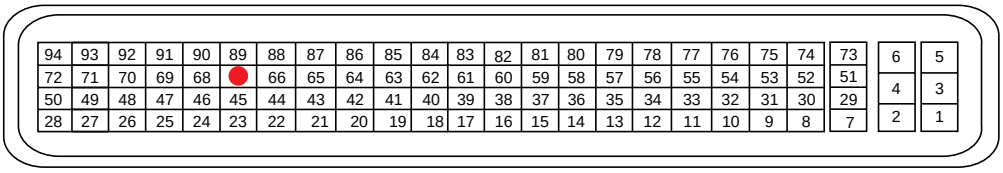

C44

EFRF300M

SIGNAL WAVEFORM AND DATA E4DCD35E

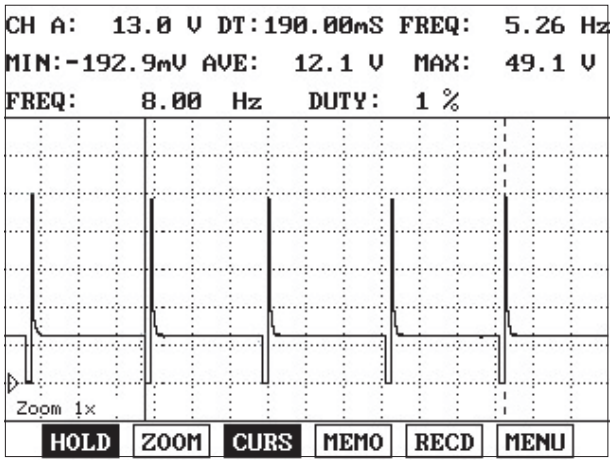

Fig.1

Fig.1) Normal waveform with idle

EFRF200P

MONITOR DTC STATUS E1EEBEF3

NOTE

If any DTCs (or pending codes) are present, do ALL REPAIRS associated with those codes before proceeding with this troubleshooting tree.

1. Connect scan tool and select "Diagnostic Trouble Codes(DTCs)" mode

2. Press F4(DTAL) to select DTC information from the DTCs menu

3. Confirm that "DTC Readiness Flag" indicates "Complete". If not, drive the vehicle within conditions noted in the freeze frame data or enable conditions

4. Read "DTC Status" parameter

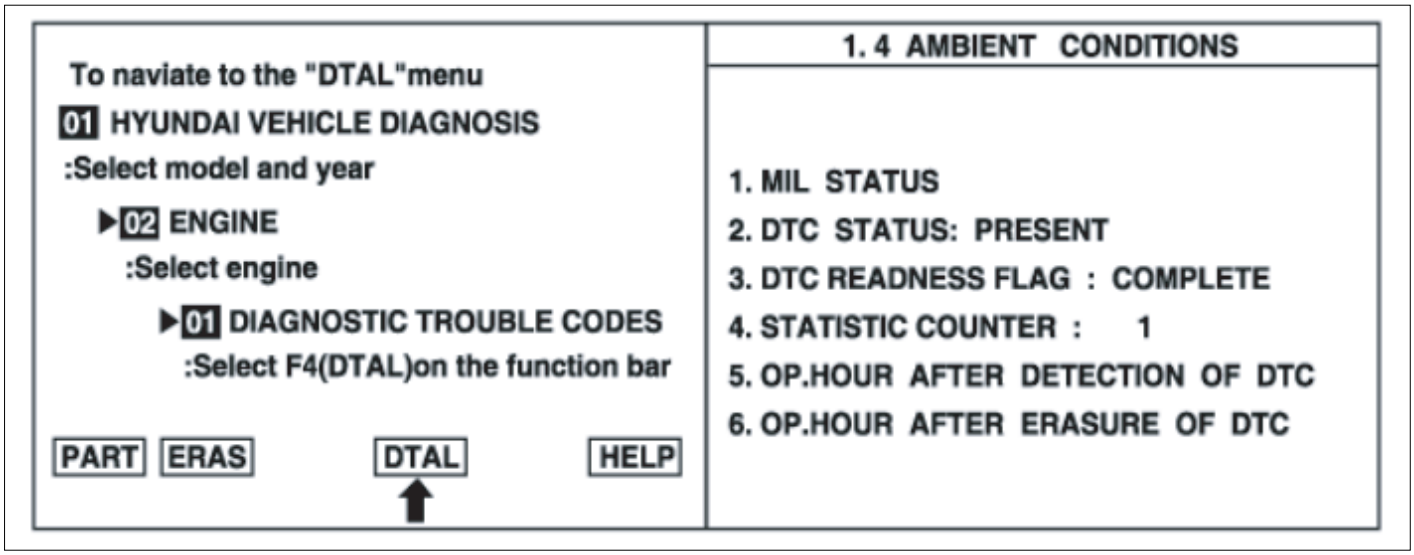

EFRF200D

5. Is parameter displayed "History(Not Present) fault"?

NOTE

- *History (Not Present) fault : DTC occurred but has been cleared.*
- *Present fault : DTC is occurring at present time.*

YES

▶ Fault is intermittent caused by poor contact in the sensor's and/or ECM's connector or was repaired and ECM memory was not cleared. Thoroughly check connectors for looseness, poor connection, bending, corrosion, contamination, deterioration, or damage. Repair or replace as necessary and then go to "Verification of Vehicle Repair" procedure.

NO

▶ Go to "Component Inspection" procedure

COMPONENT INSPECTION EAD3967C

1. Ignition "OFF"

2. Disconnect PCSV connector

3. Measure resistance between terminals 1 and 2 of the PCSV connector(Component side)

Temp.(°C)	Temp.(°F)	PCSV Resistance(Ω)
20	68	19 ~ 22

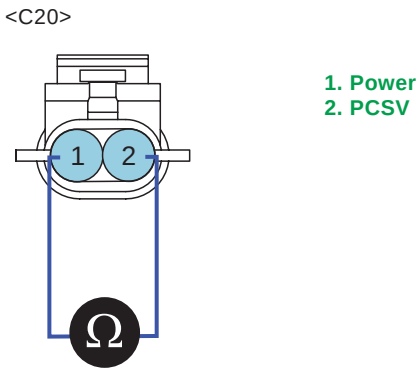

4. Is resistance within the specification?

YES

▶ Go to next step as below

NO

▶ Check PCSV for contamination, deterioration, or damage. Substitute with a known-good PCSV and check for proper operation. If the problem is corrected, replace PCSV and then go to "Verification of Vehicle Repair" procedure

TERMINAL AND CONNECTOR INSPECTION ECD6FA0D

1. Many malfunctions in the electrical system are caused by poor harness(es) and terminals. Faults can also be caused by interference from other electrical systems, and mechanical or chemical damage.
2. Thoroughly check connectors for looseness, poor connection, bending, corrosion, contamination, deterioration, or damage.
3. Has a problem been found?

YES

▶ Repair as necessary and go to "Verification of Vehicle Repair" procedure

NO

▶ Go to "Power Circuit Inspection" procedure

POWER CIRCUIT INSPECTION E49FA0E4

1. Ignition "ON" & Engine "OFF"
2. Measure voltage between terminal 1 of the PCSV harness connector and chassis ground

Specification : Approx. B+

3. Is voltage within the specification?

YES

▶ Go to "Control Circuit Inspection" procedure

NO

▶ Check for a open in the power supply circuit. Repair as necessary and go to "Verification of Vehicle Repair" procedure

CONTROL CIRCUIT INSEPCTION E70A9B9B

1. Ignition "OFF"
2. Disconnect ECM connector
3. Measure resistance between terminal 2 of the PCSV harness connector and 67 of the ECM harness connector

Specification : Approx. 0Ω

4. Is resistance within the specification?

YES

▶ Check for poor connection between ECM and component: backed out terminal, improper mating, broken locks or poor terminal to wire connection. Repair as necessary and go to "Verification of Vehicle Repair" procedure

NO

▶ Repair as necessary and go to "Verification of Vehicle Repair" procedure

VERIFICATION OF VEHICLE REPAIR ED2CBF23

After a repair, it is essential to verify that the fault has been corrected.

1. Connect scan tool and select "Diagnostic Trouble Codes(DTCs)" mode
2. Press F4(DTAL) and confirm that "DTC Readiness Flag" indicates "Complete". If not, drive the vehicle within conditions noted in the freeze frame data or enable conditions
3. Read "DTC Status" parameter
4. Is parameter displayed "History(Not Present) fault"?

YES

▶ System performing to specification at this time. Clear the DTC

NO

▶ Go to the applicable troubleshooting procedure

DTC P0445 EVAP. EMISSION SYSTEM-PURGE CTRL. VALVE CIRCUIT SHORTED

COMPONENT LOCATION E762CBCD

Refer to DTC P0444.

GENERAL DESCRIPTION E84F02CA

Refer to DTC P0444.

DTC DESCRIPTION EFEE4177

ECM sets DTC P0445 if the ECM detects that the PCSV control circuit is shorted to ground or shorted to battery voltage.

DTC DETECTING CONDITION E9FCDFB0

Item	Detecting Condition	Possible Cause
DTC Strategy	• Electrical Check	• Short in PCSV harness • Contact resistance in connectors • Faulty PCSV
Enable Conditions	• 6V < Battery voltage • Ignition "ON"	
Threshold Value	• Short to ground or battery in control circuit	
Diagnostic Time	• 6sec.	

SPECIFICATION EB545E26

Refer to DTC P0444.

SCHEMATIC DIAGRAM EB0218C0

Refer to DTC P0444.

SIGNAL WAVEFORM AND DATA EAC043E0

Refer to DTC P0444.

MONITOR DTC STATUS EC7960BF

1. Connect scan tool and select "Diagnostic Trouble Codes(DTCs)" mode
2. Press F4(DTAL) to select DTC information from the DTCs menu
3. Confirm that "DTC Readiness Flag" indicates "Complete". If not, drive the vehicle within conditions noted in the freeze frame data or enable conditions
4. Read "DTC Status" parameter

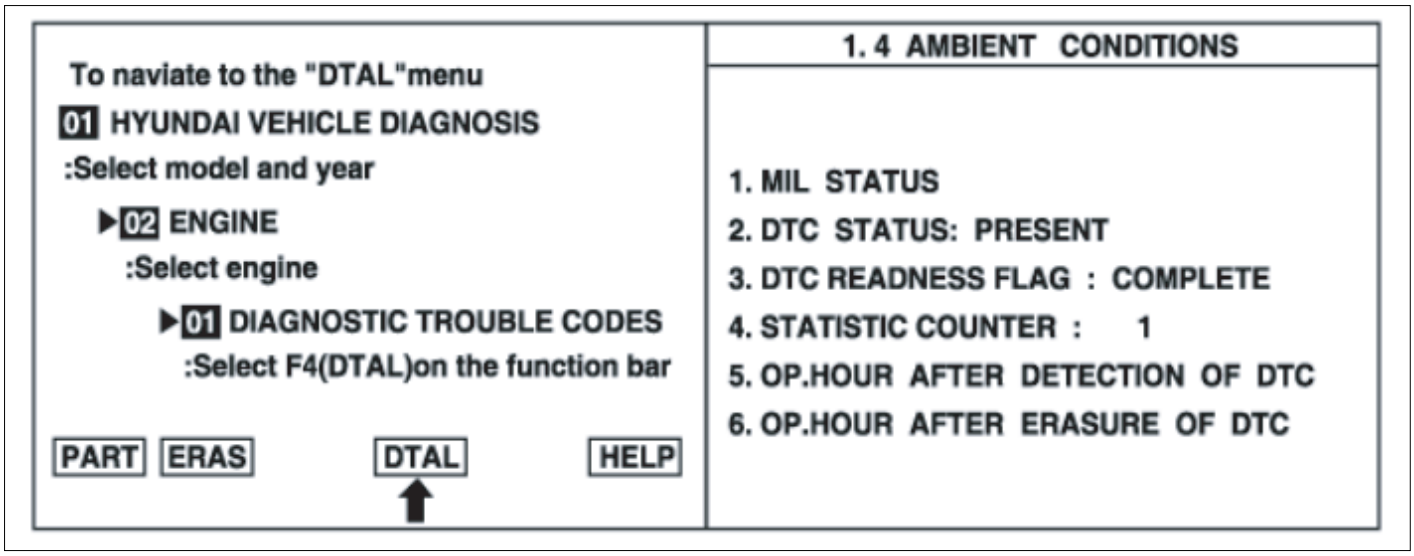

EFRF200D

5. Is parameter displayed "History(Not Present) fault"?

NOTE

- *History (Not Present) fault : DTC occurred but has been cleared.*
- *Present fault : DTC is occurring at present time.*

YES

▶ Fault is intermittent, caused by poor contact in the sensor's and/or ECM's connector or was repaired and ECM memory was not cleared. Thoroughly check connectors for looseness, poor connection, bending, corrosion, contamination, deterioration, or damage. Repair or replace as necessary and go to "Verification of Vehicle Repair" procedure

NO

▶ Go to "Component Inspection" procedure

COMPONENT INSPECTION EB5FAD07

Refer to DTC P0444.

TERMINAL AND CONNECTOR INSPECTION E0A32B7C

Refer to DTC P0444.

POWER SUPPLY CIRCUIT INSPECTION EC80ADEC

1. Ignition "ON" & Engine "OFF"

2. Measure voltage between terminal 1 of the PCSV harness connector and chassis ground

Specification :	Approx. B+

3. Is voltage within the specification?

YES

▶ Go to "Control Circuit Inspection" procedure

NO

▶ Check for a open in the power supply circuit. Repair as necessary and go to "Verification of Vehicle Repair" procedure

CONTROL CIRCUIT INSPECTION EF2ED36F

1. Measure voltage between terminal 2 of the PCSV harness connector and chassis ground

Specification : Approx. 5V

2. Is voltage within the specification?

YES

▶ Check for poor connection between ECM and component: backed out terminal, improper mating, broken locks or poor terminal to wire connection. Repair as necessary and go to "Verification of Vehicle Repair" procedure

NO

▶ Check control circuit for open or short. Repair as necessary and go to "Verification of Vehicle Repair" procedure.

VERIFICATION OF VEHICLE REPAIR EEB2FE80

Refer to DTC P0444.

DTC P0504 BRAKE SWITCH "A"/"B" CORRELATION

COMPONENT LOCATION EE915BA6

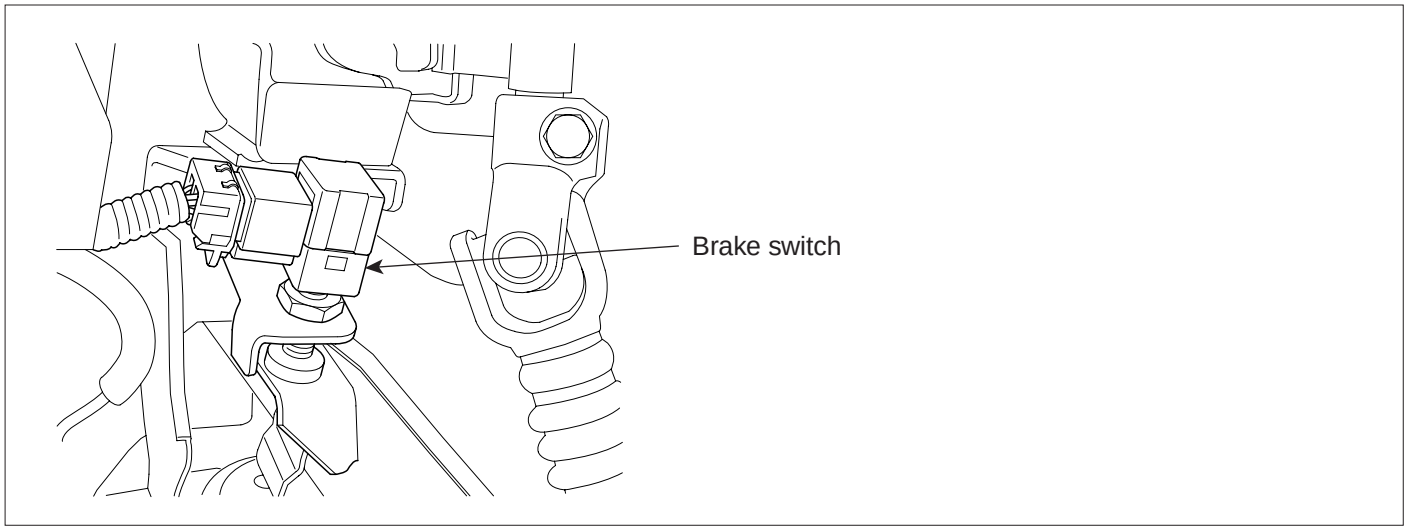

EFRF504A

GENERAL DESCRIPTION EA9BBA7D

The brake light bulb is turned on and off by a brake light switch mounted near the brake pedal and actuated by movement of the brake pedal. Refer to Group BR, Brake System, for adjustment of the brake (stop) light switch. The "BRAKE" warning lamp comes on when brake fluid drops below a safe level with the ignition switch in the "ON" position as a bulb check. The brake fluid warning switch is located at the master cylinder tank. The float grounds the lamp circuit when the brake fluid goes below the central position, causing the lamp to come on.Start the engine, depress the brake pedal with approximately 120kg(1176.8N, 264.5 lb) of force, and check for oil leakage in the master cylinder, brake line and each connecting part. The opposite position indicator shows inverted signal characteristics.TPS1 output voltage increases smoothly in proportion with the throttle valve opening angle after starting. TPS2 output voltage decreases smoothly in inverse proportion with the throttle valve opening angle after starting.

DTC DESCRIPTION ED0DECD0

ECM sets DTC P0504 if the ECM detects signal of the brake warning lamp and brake switch are abnormal

DTC DETECTING CONDITION E4B6A8D3

Item	Detecting Condition	Possible Cause
DTC Strategy	• Plausibility check between Brake Light Switch(BLS) and Brake Test Switch(BTS)	• Open or short circuit in harness • Poor connection in connectors • Faulty brake warning lamp or brake test switch
Enable Conditions	• Ignition "ON"	
Threshold Value	• Time for BLS activation- BTS activation > 10sec.	
Diagnostic Time	• 1.2sec.	

SPECIFICATION E3E7DCC5

Test Condition	Brake warning switch	Brake test switch
Depressing brake pedal	Battery voltage	Approx. 0V
Releasing brake pedal	Approx. 0V	Battery voltage

SCHEMATIC DIAGRAM ECC683DA

[Circuit Diagram]

[Connection Information]

Terminal	Connected to	Funtion
1	ECM Terminal 83	Brake Warning SW
2	Junction Block	Power
3	ECM Terminal 74	Brake Test SW
4	Junction Block	Power

[Harness Connector]

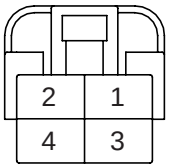

E62

ECM

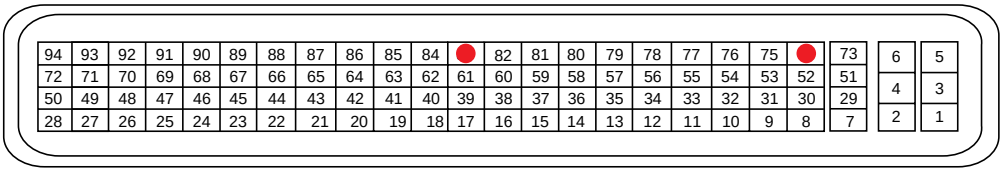

C44

EFRF300X

SIGNAL WAVFORM AND DATA EF9ABFEF

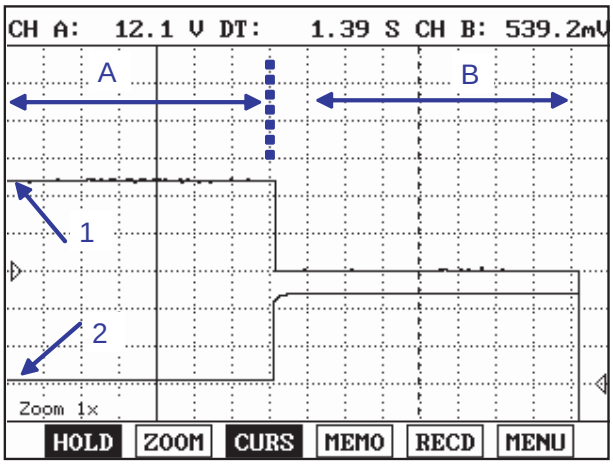

Fig.1

Fig.1) 1.Brake test switch : Battery voltage , 2. Brake warning switch : Approx.0V
A : Ignition "ON" & Releasing brake pedal
B : Ignition "ON" & Depressing brake pedal

EFRF400C

MONITOR DTC STATUS E7A32B7B

1. Connect scan tool and select "Diagnostic Trouble Codes(DTCs)" mode

2. Press F4(DTAL) to select DTC information from the DTCs menu

3. Confirm that "DTC Readiness Flag" indicates "Complete". If not, drive the vehicle within conditions noted in the freeze frame data or enable conditions

4. Read "DTC Status" parameter

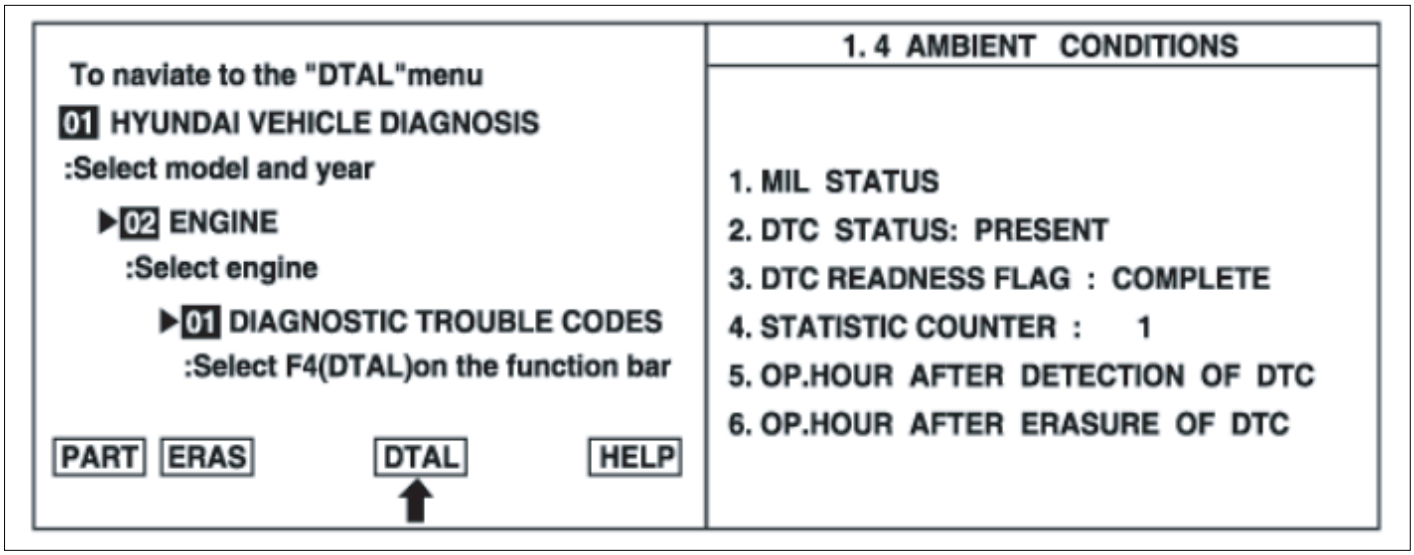

EFRF200D

5. Is parameter displayed "History(Not Present) fault"?

NOTE

- *History (Not Present) fault : DTC occurred but has been cleared.*
- *Present fault : DTC is occurring at present time.*

YES

▶ Fault is intermittent caused by poor contact in the sensor's and/or the ECM's connector, which was repaired but ECM memory was not cleared. Thoroughly check connectors for looseness, poor connection, bending, corrosion, contamination, deterioration, or damage. Repair or replace as necessary and go to "Verification of Vehicle Repair" procedure

NO

▶ Go to next step as below

CHECK BRAKE TEST SWITCH

1. Ignition "OFF"

2. Disconnect ECM harness connector

3. Ignition "ON" & Engine "OFF"

4. Measure voltage between terminal 74 of the ECM harness connector and chassis ground

SPECIFICATION :

Test Condition	Brake test switch
Depressing brake pedal	Approx. 0V
Releasing brake pedal	Battery voltage

5. Is voltage within the specification?

YES

▶ Go to next step as below

NO

▶ Repair as necessary and go to "Verification of Vehicle Repair" procedure

CHECK BRAKE WARNING SWITCH

1. Measure voltage between terminal 83 of the ECM harness connector and chassis ground

Test Condition	Brake warning switch
Depressing brake pedal	Battery voltage
Releasing brake pedal	Approx. 0V

2. Is voltage within the specification?

YES

▶ Go to next step as below

NO

▶ Repair as necessary and go to "Verification of Vehicle Repair" procedure

TERMINAL AND CONNECTOR INSPECTION EDBEACCE

1. Many malfunctions in the electrical system are caused by poor harness(es) and terminals. Faults can also be caused by interference from other electrical systems, and mechanical or chemical damage.

2. Thoroughly check connectors for looseness, poor connection, bending, corrosion, contamination, deterioration, or damage.

3. Has a problem been found?

YES

▶ Repair as necessary and go to "Verification of Vehicle Repair" procedure

NO

▶ Check for poor connection between ECM and component: backed out terminal, improper mating, broken locks or poor terminal to wire connection. Repair as necessary and go to "Verification of Vehicle Repair" procedure

VERIFICATION OF VEHICLE REPAIR E8A3E9FB

After a repair, it is essential to verify that the fault has been corrected.

1. Connect scan tool and select "Diagnostic Trouble Codes(DTCs)" mode
2. Press F4(DTAL) and confirm that "DTC Readiness Flag" indicates "Complete". If not, drive the vehicle within conditions noted in the freeze frame data or enable conditions
3. Read "DTC Status" parameter
4. Is parameter displayed "History(Not Present) fault"?

YES

▶ System performing to specification at this time. Clear the DTC

NO

▶ Go to the applicable troubleshooting procedure.

DTC P0506 IDLE AIR CONTROL SYSTEM-RPM LOWER THAN EXPECTED

COMPONENT LOCATION EA6D2FF9

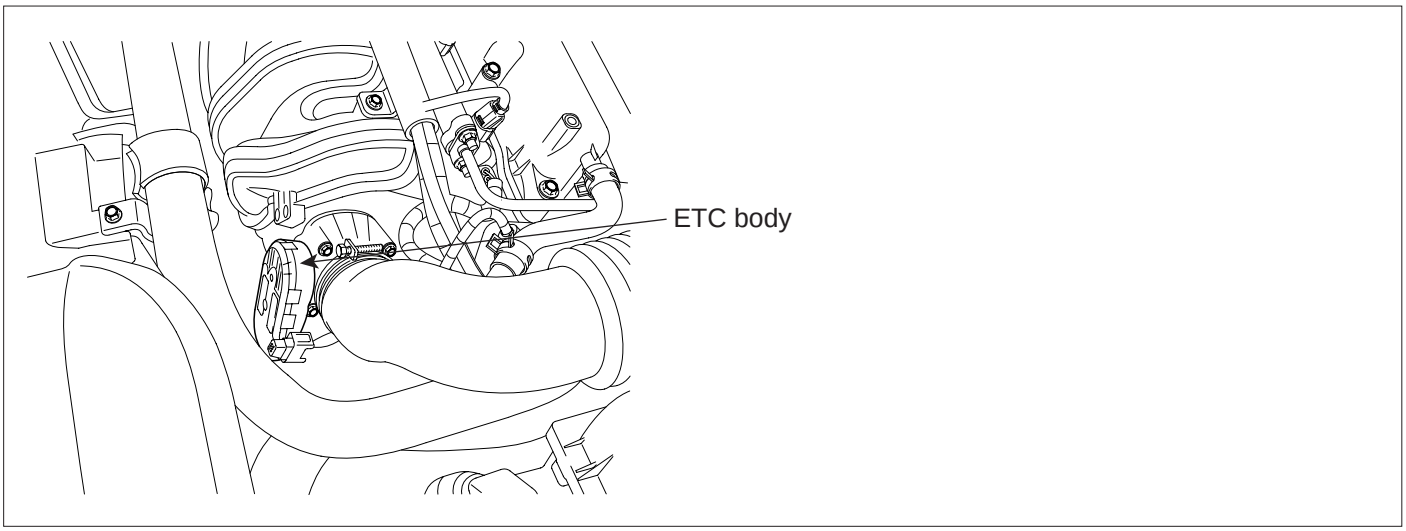

EFRF015A

GENERAL DESCRIPTION E39F0C89

When engine is idling, the ECM adjusts the throttle valve so that the engine runs at the correct idling speed, regardless of coolant temperature, load and etc. When the additional load applied in the engine, the air flow through the idle speed control actuator is increased momentarily to raise the idling speed.

DTC DESCRIPTION E0C9BEAD

The ECM monitors engine speed deviation from the target idle engine speed when the vehicle is stopped and the throttle valve opening is stable. The ECM sets DTC P0506 if the difference to the target idle engine speed is lower than the predetermined threshold.

DTC DETECTING CONDITION EF5CBD34

Item	Detecting Condition	Possible Cause
DTC Strategy	• Monitoring high deviation between Target Idle Speed and Actual Engine Speed	• Restriction in intake or exhaust system • Carbonustment of the accelerator cable • Contact resistance in connectors • Faulty ETC system
Enable Conditions	• Idle speed controller active • 11< Battery voltage <16 • Vehicle speed=0 • After engine start > 2sec. • Air mass flow <240 mg/stk • 74℃(165°F)< Coolant Temp.<143℃(289°F) • Flow from Canister purge valve < 1kg/h	
Threshold Value	• Engine Speed - Nominal Idle Speed < 100rpm	
Diagnostic Time	• 5sec.	

MONITOR DTC STATUS E37969BD

NOTE

If any TPS, MAFS, ETC or APS codes are present, do ALL REPAIRS associated with them before proceeding with this troubleshooting tree.

1. Connect scan tool and select "Diagnostic Trouble Codes(DTCs)" mode
2. Press F4(DTAL) to select DTC information from the DTCs menu
3. Confirm that "DTC Readiness Flag" indicates "Complete". If not, drive the vehicle within conditions noted in the freeze frame data or enable conditions
4. Read "DTC Status" parameter

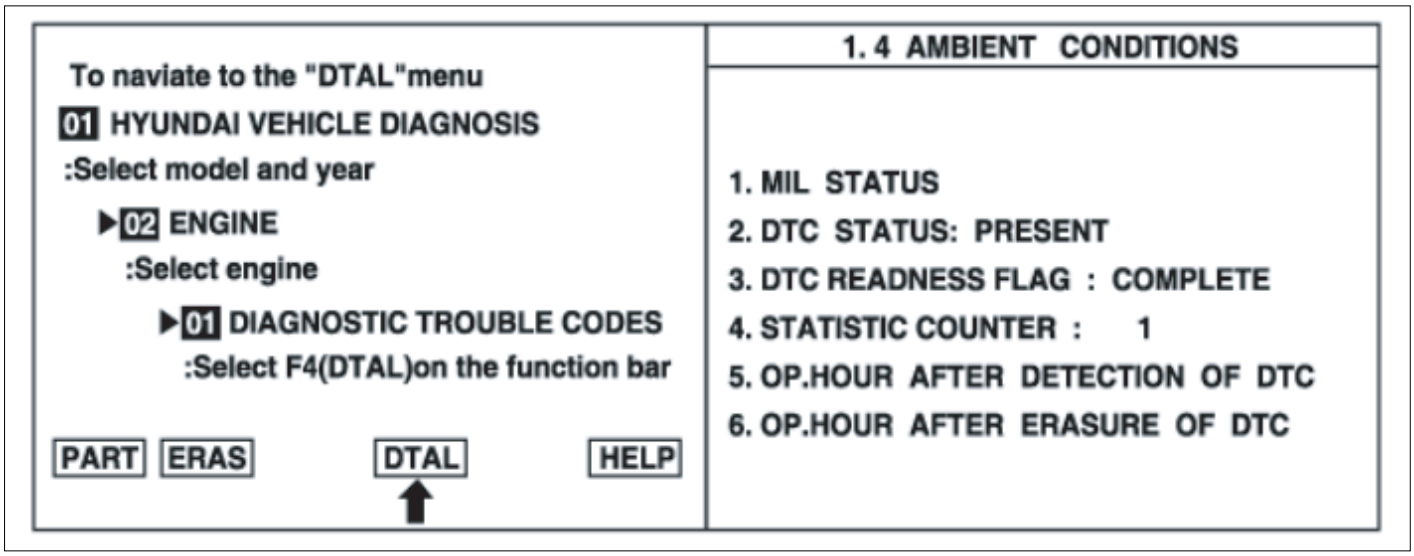

EFRF200D

5. Is parameter displayed "History(Not Present) fault"?

NOTE

- *History (Not Present) fault : DTC occurred but has been cleared.*
- *Present fault : DTC is occurring at present time.*

YES

▶ Fault is intermittent caused by poor contact in the sensor's and/or ECM's connector or was repaired and ECM memory was not cleared. Thoroughly check connectors for loose or poor connections, bending, corrosion, contamination, deterioration, or damage. Repair or replace as necessary and go to "Verification of Vehicle Repair" procedure

NO

▶ Go to next step as below

CHECK FOR RESTRICTED INTAKE OR EXHAUST SYSTEM

1. Visually/physically inspect the following items:
   - Air cleaner filter element for excessive dirt or for any foreign objects
   - Throttle body inlet for damage or for any foreign objects
   - Restricted exhaust system
2. Was a problem found in any of the above areas?

YES

▶ Repair as necessary and go to "Verification of Vehicle Repair" procedure

NO

▶ Go to next step as below

TERMINAL AND CONNECTOR INSPECTION ECC185D7

1. Many malfunctions in the electrical system are caused by poor harness(es) and terminals. Faults can also be caused by interference from other electrical systems, and mechanical or chemical damage.
2. Thoroughly check connectors for looseness, poor connection, bending, corrosion, contamination, deterioration, or damage.
3. Has a problem been found?

YES

▶ Repair as necessary and go to "Verification of Vehicle Repair" procedure

NO

▶ Go to next step as below

COMPONENT INSPECTION E6F1DF30

1. Start engine and check proper operation of the ETC motor and TPS1 & 2

SPECIFICATION :

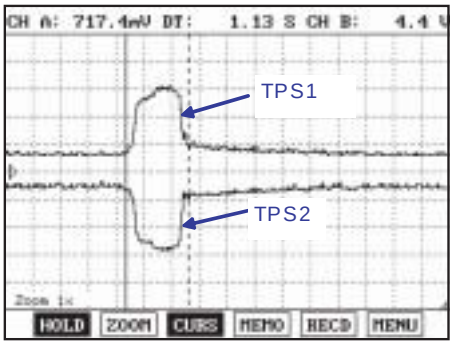

Fig. 1

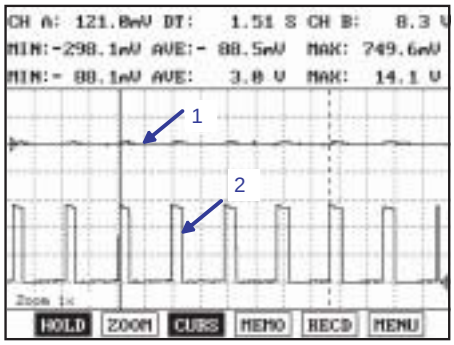

Fig. 2

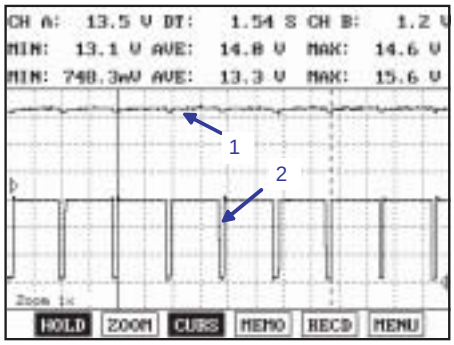

Fig. 3

Fig. 1) 1(TPS1) : Output voltage increases smoothly in proportion with the throttle valve opening angle after starting.
2(TPS2) : Output voltage decreases smoothly in inverse proportion with the throttle valve opening angle after starting.

1 : ETC Output 1 2 : ETC Output 2

Fig.2) Normal value with idle, Fig.3) Normal value with acceleration

EFRF901E

2. Has a problem been found?

YES

▶ Remove the ETC unit and check for contamination, deterioration, or damage. Clean or repair as necessary and go to "Verification of Vehicle Repair" procedure. If OK, substitute with a known-good ETC unit and check for proper operation. If the problem is corrected, replace ETC unit and then go to "Verification of Vehicle Repair" procedure.

NOTE

It is necessary to perform the TPS adaptation procedure with Scan tool when the throttle body assembly or ECM is replaced.

■ TPS adaptation procedure
1. Erase previous TPS adaptation value using Scan tool.
2. Ignition "OFF" and then "ON" without cranking. Wait for 10 seconds under enable conditions
   - Enable conditions : Battery > 10V & Intake Air Temp. > 5.3℃(41.5°F) & 5.3℃(41.5°F) < Engine Coolant Temp. < 99.8℃(211.6°F)
3. After TPS adaptation, the system normality should be confirmed by reading out "FMY" on the Scan Tool

NO

▶ Check for poor connection between ECM and component: backed out terminal, improper mating, broken locks or poor terminal to wire connection. Repair as necessary and go to "Verification of Vehicle Repair" procedure

VERIFICATION OF VEHICLE REPAIR E547C239

After a repair, it is essential to verify that the fault has been corrected.

1. Connect scan tool and select "Diagnostic Trouble Codes(DTCs)" mode

2. Press F4(DTAL) and confirm that "DTC Readiness Flag" indicates "Complete". If not, drive the vehicle within conditions noted in the freeze frame data or enable conditions

3. Read "DTC Status" parameter

4. Is parameter displayed "History(Not Present) fault"?

YES

▶ System performing to specification at this time. Clear the DTC

NO

▶ Go to the applicable troubleshooting procedure.

DTC P0507 IDLE AIR CONTROL SYSTEM-RPM HIGHER THAN EXPECTED

COMPONENT LOCATION EAAF4F66

Refer to DTC P0506.

GENERAL DESCRIPTION E5DCADE9

Refer to DTC P0506.

DTC DESCRIPTION E0E8677E

The ECM monitors engine speed deviation from the target idle engine speed when the vehicle is stopped and the throttle valve opening is stable. The ECM sets DTC P0507 if the difference to the target idle engine speed is higher than the predetermined threshold.

DTC DETECTING CONDITION E0C245CE

Item	Detecting Condition	Possible Cause
DTC Strategy	• Monitoring high deviation between Target Idle Speed and Actual Engine Speed	• A stuck or binding throttle plate • Air leakage • Contact resistance in connectors • Faulty ETC system
Enable Conditions	• Idle speed controller active • 11< Battery voltage <16 • Vehicle speed=0 • After engine start > 2sec. • Air mass flow <240 mg/stk • 74℃(165°F)< Coolant Temp.<143℃(289°F) • Flow from Canister purge valve < 1kg/h	
Threshold Value	• Engine Speed - Nominal Idle Speed > 200rpm	
Diagnostic Time	• 5sec.	

MONITOR DTC STATUS E44D95DC

Refer to DTC P0506.

AIR LEAKAGE INSPECTION EBAF13DF

1. Visually/physically inspect the air leakage in intake/exhaust system as following items,
   If OK, go to next step
   If NG, clean or repair as necessary and go to "Verification of Vehicle Repair" procedure
   - Check for throttle Plate being held open with excessive carbon deposits
   - Vacuum hoses for splits, kinks and improper connections
   - Throttle body gasket
   - Gasket between intake manifold and cylinder head
   - Seals between intake manifold and fuel injectors
   - Exhaust system between HO2S and Three way catalyst for air leakage

2. Check for air leakage in EVAP. Purge control valve

   1) Remove the manifold side vacuum hose from the EVAP canister purge valve.

   2) Using a hand vacuum pump apply specified vacuum(Approx. 15 in, Hg) to the manifold side of the valve

3) Does the valve hold vacuum?

YES

▶ Go to next step as below

NO

▶ Repair as necessary and go to "Verification of Vehicle Repair" procedure

TERMINAL AND CONNECTOR INSPECTION E217D42E

Refer to DTC P0506.

COMPONENT INSPECTION E2EEA469

Refer to DTC P0506.

VERIFICATION OF VEHICLE REPAIR E1CAFB42

Refer to DTC P0506.

DTC P0551 POWER STEERING PRESSURE SENSOR/SWITCH CIRCUIT RANGE/PERFORMANCE

COMPONENT LOCATION E1CE429A

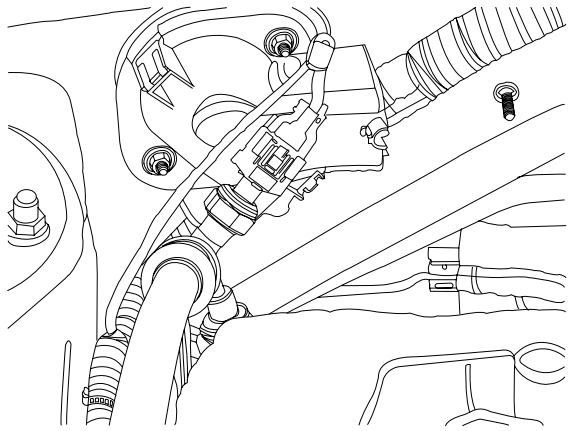

EFRF003A

GENERAL DESCRIPTION EF756C2D

The power steering system increases steering performance and improves steering feel and power-saving effectiveness. The power steering pressure switch senses the power steering load and converts it into a voltage signal to the ECM. The ECM then controls the idle speed control motor by using the voltage signal from the power steering pressure switch.

DTC DESCRIPTION E13253AC

ECM sets DTC P0551 if the ECM detects signal exceeds the possible range of a properly operating sensor

DTC DETECTING CONDITION E9E3E5CD

Item	Detecting Condition	Possible Cause
DTC Strategy	• Plausibility check	• Poor connection in connectors • Faulty power steering pressure sensor
Enable Conditions	• Engine running	
Threshold Value	• Signal exceeds threshold value	
Diagnostic Time	• -	

SCHEMATIC DIAGRAM EFFA98D4

[Circuit Diagram]

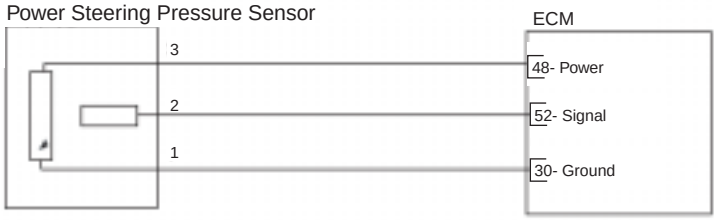

[Connection Information]

Terminal	Connected to	Funtion
1	ECM Terminal 30	Ground
2	ECM Terminal 52	Signal
3	ECM Terminal 48	Power

[Harness Connector]

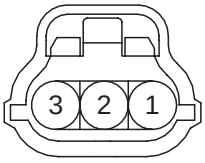

E61

ECM

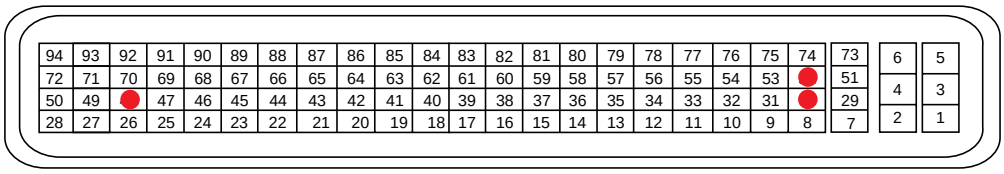

C44

EFRF300P

SIGNAL WAVEFORM AND DATA E6AFB97D

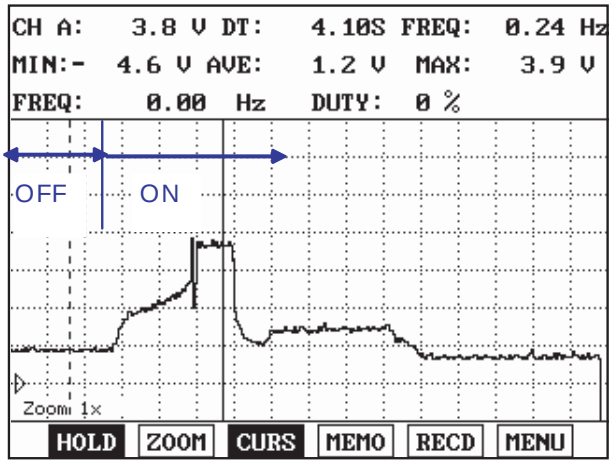

Fig. 1

Fig. 1) Signal "OFF"(Steering wheel=Straight ahead) → "ON"(Steering wheel=Turned) :
Output voltage increases(Approx. 1.2V → 3.9V)

EFRF200Q

MONITOR DTC STATUS E1205C19

NOTE

If any TPS, MAFS or IAC Valve circuit codes are present, do ALL REPAIRS associated with them before proceeding with this troubleshooting tree.

1. Connect scan tool and select "Diagnostic Trouble Codes(DTCs)" mode

2. Press F4(DTAL) to select DTC information from the DTCs menu

3. Confirm that "DTC Readiness Flag" indicates "Complete". If not, drive the vehicle within conditions noted in the freeze frame data or enable conditions

4. Read "DTC Status" parameter

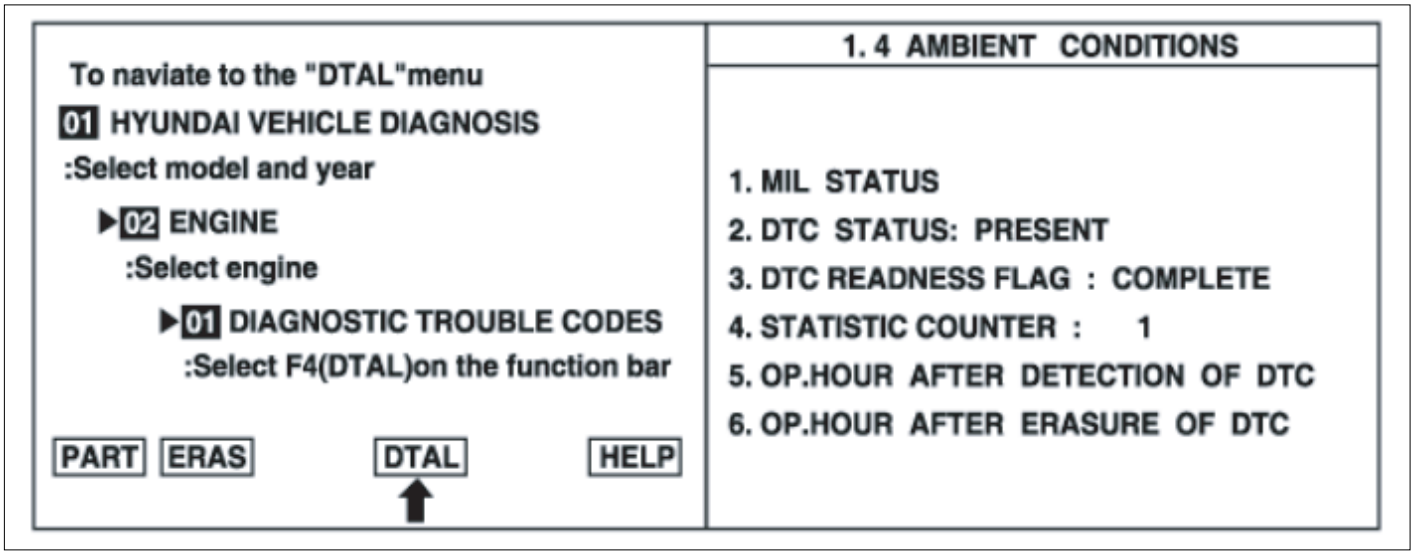

EFRF200D

5. Is parameter displayed "History(Not Present) fault"?

NOTE

- *History (Not Present) fault : DTC occurred but has been cleared.*
- *Present fault : DTC is occurring at present time.*

YES

▶ Fault is intermittent caused by poor contact in the sensor's and/or ECM's connector or was repaired and ECM memory was not cleared. Thoroughly check connectors for loose or poor connections, bending, corrosion, contamination, deterioration, or damage. Repair or replace as necessary and go to "Verification of Vehicle Repair" procedure

NO

▶ Go to next step as below

TERMINAL AND CONNECTOR INSPECTION E3A8BBBD

1. Many malfunctions in the electrical system are caused by poor harness(es) and terminals. Faults can also be caused by interference from other electrical systems, and mechanical or chemical damage.

2. Thoroughly check connectors for looseness, poor connection, bending, corrosion, contamination, deterioration, or damage.

3. Has a problem been found?

YES

▶ Repair as necessary and go to "Verification of Vehicle Repair" procedure

NO

▶ Go to next step as below

COMPONENT INSPECTION E6A0B5A7

1. Warm up the engine to normal operating temperature
2. Check the signal waveform referring to below figure.

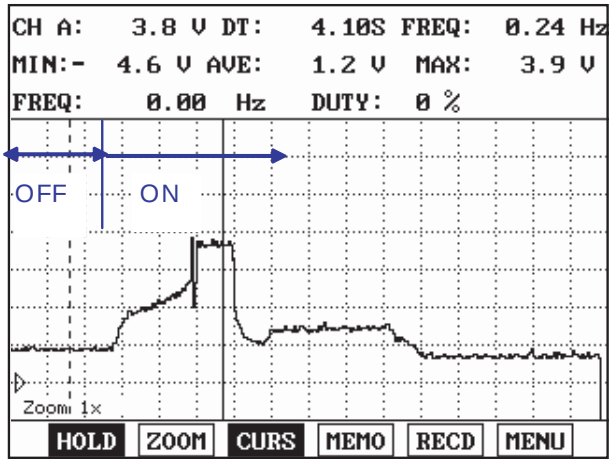

Fig. 1

Fig. 1) Signal "OFF"(Steering wheel=Straight ahead) → "ON"(Steering wheel=Turned) :
Output voltage increases(Approx. 1.2V → 3.9V)

EFRF200Q

3. Is waveform within the specification?

YES

▶ Check for poor connection between ECM and component: backed out terminal, improper mating, broken locks or poor terminal to wire connection. Repair as necessary and go to "Verification of Vehicle Repair" procedure

NO

▶ Substitute with a known-good sensor and check for proper operation. If the problem is corrected, replace sensor and then go to "Verification of Vehicle Repair" procedure.

VERIFICATION OF VEHICLE REPAIR EE33D16F

After a repair, it is essential to verify that the fault has been corrected.

1. Connect scan tool and select "Diagnostic Trouble Codes(DTCs)" mode
2. Press F4(DTAL) and confirm that "DTC Readiness Flag" indicates "Complete". If not, drive the vehicle within conditions noted in the freeze frame data or enable conditions
3. Read "DTC Status" parameter

4. Is parameter displayed "History(Not Present) fault"?

YES

▶ System performing to specification at this time. Clear the DTC

NO

▶ Go to the applicable troubleshooting procedure.

DTC P0552 POWER STEERING PRESSURE SENSOR/SWITCH CIRCUIT LOW INPUT

COMPONENT LOCATION E334BFF6

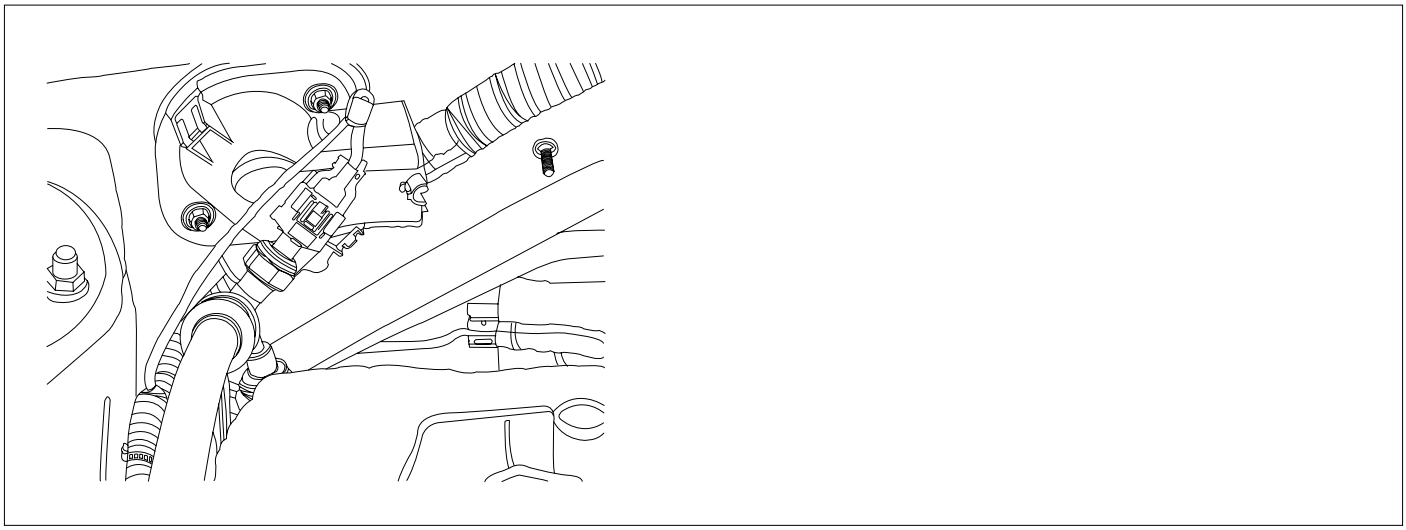

EFRF003A

GENERAL DESCRIPTION EB60B3D7

The power steering system increases steering performance and improves steering feel and power-saving effectiveness. The power steering pressure switch senses the power steering load and converts it into a voltage signal to the ECM. The ECM then controls the idle speed control motor by using the voltage signal from the power steering pressure switch.

DTC DESCRIPTION E18A8311

ECM sets DTC P0552 if the ECM detects signal lower than the possible range of a properly operating sensor

DTC DETECTING CONDITION EA17F3FD

Item	Detecting Condition	Possible Cause
DTC Strategy	• Electrical Check	• Open in power circuit • Open or short to ground in signal circuit • Poor connection in connectors • Faulty power steering pressure sensor
Enable Conditions	• Ignition "ON" • Engine running	
Threshold Value	• Signal voltage < 0.1V	
Diagnostic Time	• -	

SCHEMATIC DIAGRAM ED124E3F

[Circuit Diagram]

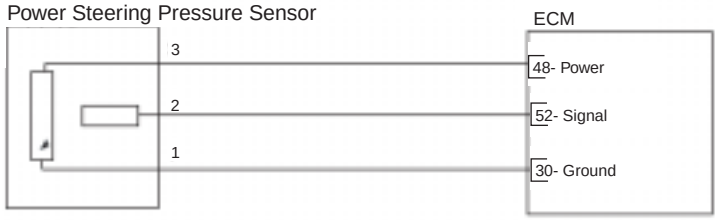

[Connection Information]

Terminal	Connected to	Funtion
1	ECM Terminal 30	Ground
2	ECM Terminal 52	Signal
3	ECM Terminal 48	Power

[Harness Connector]

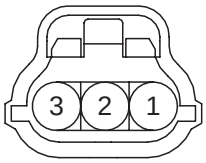

E61

ECM

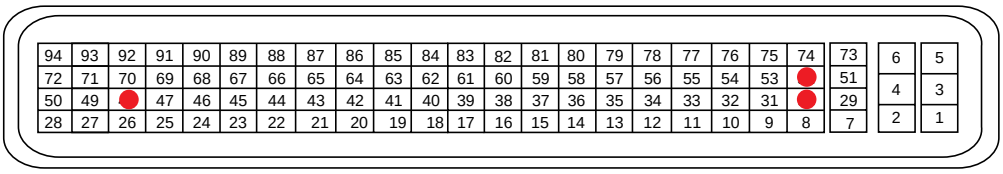

C44

EFRF300P

SIGNAL WAVEFORM AND DATA E243175B

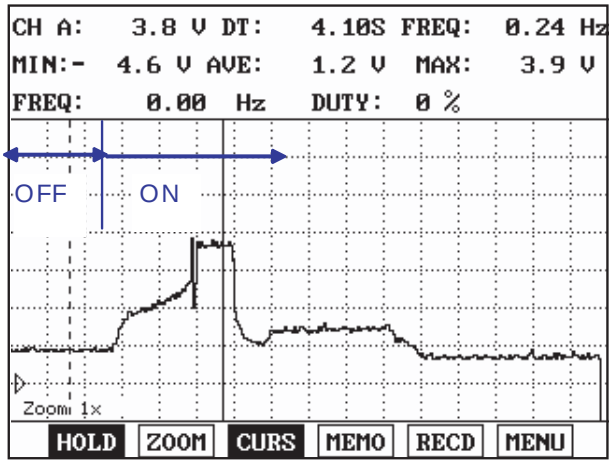

Fig. 1

Fig. 1) Signal "OFF"(Steering wheel=Straight ahead) → "ON"(Steering wheel=Turned) :
Output voltage increases(Approx. 1.2V → 3.9V)

EFRF200Q

MONITOR DTC STATUS E3D10B22

NOTE

If any TPS, MAFS or IAC Valve circuit codes are present, do ALL REPAIRS associated with them before proceeding with this troubleshooting tree.

1. Connect scan tool and select "Diagnostic Trouble Codes(DTCs)" mode

2. Press F4(DTAL) to select DTC information from the DTCs menu

3. Confirm that "DTC Readiness Flag" indicates "Complete". If not, drive the vehicle within conditions noted in the freeze frame data or enable conditions

4. Read "DTC Status" parameter

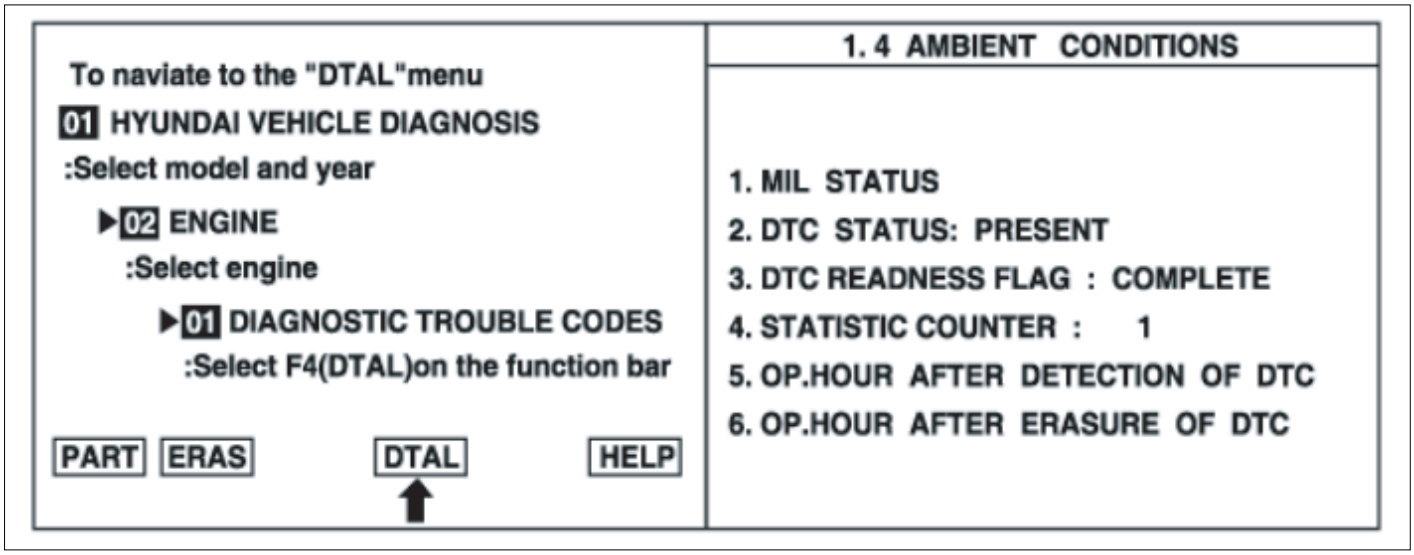

EFRF200D

5. Is parameter displayed "History(Not Present) fault"?

NOTE

- *History (Not Present) fault : DTC occurred but has been cleared.*
- *Present fault : DTC is occurring at present time.*

YES

▶ Fault is intermittent caused by poor contact in the sensor's and/or ECM's connector or was repaired and ECM memory was not cleared. Thoroughly check connectors for loose or poor connections, bending, corrosion, contamination, deterioration, or damage. Repair or replace as necessary and go to "Verification of Vehicle Repair" procedure

NO

▶ Go to next step as below

POWER CIRCUIT INSPECTION EA53FAA8

1. Ignition "ON" & Engine "OFF".

2. Measure the voltage between terminal 3 of the sensor harness connector and chassis ground.

Specification :	Approx. 5V

3. Is voltage within the specification?

YES

▶ Go to "Signal Circuit Inspection"procedure

NO

▶ Check for an open in the power circuit. Repair as necessary and go to "Verification of Vehicle Repair" procedure.

SIGNAL CIRCUIT INSPECTION EF27086A

1. Check for open circuit

   1) Ignition "OFF"

   2) Disconnect ECM harness connector

   3) Measure the resistance between terminal 2 of the sensor harness connector and 52 of the ECM harness connector

Specification : Approx. 0Ω

   4) Is resistance within the specification?

   YES

   ▶ Go to next step as below

   NO

   ▶ Repair as necessary and go to "Verification of Vehicle Repair" procedure.

2. Check for short to ground

   1) Measure the resistance between terminal 2 of the sensor harness connector and chassis ground

Specification : Infinite

   2) Is resistance within the specification?

   YES

   ▶ Go to next step as below

   NO

   ▶ Repair as necessary and go to "Verification of Vehicle Repair" procedure.

TERMINAL AND CONNECTOR INSPECTION ED64A2EA

1. Many malfunctions in the electrical system are caused by poor harness(es) and terminals. Faults can also be caused by interference from other electrical systems, and mechanical or chemical damage.

2. Thoroughly check connectors for looseness, poor connection, bending, corrosion, contamination, deterioration, or damage.

3. Has a problem been found?

   YES

   ▶ Repair as necessary and go to "Verification of Vehicle Repair" procedure

NO

▶ Go to next step as below

COMPONENT INSPECTION E4BA61DB

1. Reconnect the connectors and start engine
2. Check the signal waveform referring to below figure.

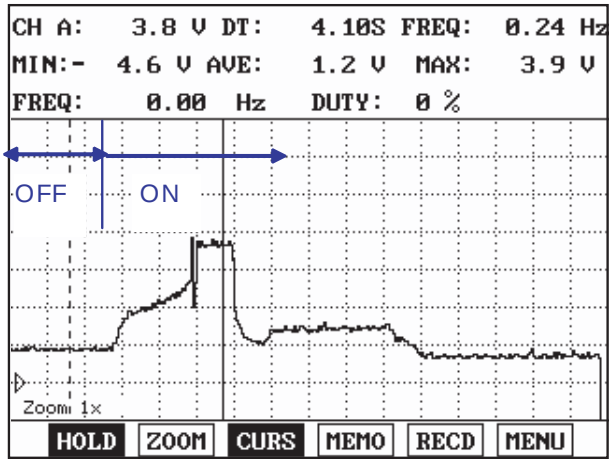

Fig. 1

Fig. 1) Signal "OFF"(Steering wheel=Straight ahead) → "ON"(Steering wheel=Turned) :
Output voltage increases(Approx. 1.2V → 3.9V)

EFRF200Q

3. Is waveform within the specification?

YES

▶ Check for poor connection between ECM and component: backed out terminal, improper mating, broken locks or poor terminal to wire connection. Repair as necessary and go to "Verification of Vehicle Repair" procedure

NO

▶ Substitute with a known-good sensor and check for proper operation. If the problem is corrected, replace sensor and then go to "Verification of Vehicle Repair" procedure.

VERIFICATION OF VEHICLE REPAIR E286602E

After a repair, it is essential to verify that the fault has been corrected.

1. Connect scan tool and select "Diagnostic Trouble Codes(DTCs)" mode
2. Press F4(DTAL) and confirm that "DTC Readiness Flag" indicates "Complete". If not, drive the vehicle within conditions noted in the freeze frame data or enable conditions
3. Read "DTC Status" parameter

4. Is parameter displayed "History(Not Present) fault"?

YES

▶ System performing to specification at this time. Clear the DTC

NO

▶ Go to the applicable troubleshooting procedure.

DTC P0553 POWER STEERING PRESSURE SENSOR/SWITCH CIRCUIT HIGH INPUT

COMPONENT LOCATION E723F108

Refer to DTC P0552.

GENERAL DESCRIPTION EF2DDCFC

Refer to DTC P0552.

DTC DESCRIPTION E636B2AD

ECM sets DTC P0553 if the ECM detects signal higher than the possible range of a properly operating sensor

DTC DETECTING CONDITION EDF8185A

Item	Detecting Condition	Possible Cause
DTC Strategy	• Electrical Check	• Short to power in signal circuit • Poor connection in connectors • Faulty power steering pressure sensor
Enable Conditions	• Ignition "ON" • Engine running	
Threshold Value	• Signal voltage > 4.7V	
Diagnostic Time	• -	

SCHEMATIC DIAGRAM ECFD33E2

Refer to DTC P0552.

SIGNAL WAVEFORM AND DATA E5EBD075

Refer to DTC P0552.

MONITOR DTC STATUS E09196DA

Refer to DTC P0552.

TERMINAL AND CONNECTOR INSPECTION E1AD5EC2

Refer to DTC P0552.

SIGNAL CIRCUIT INSPECTION E408C644

1. Ignition "ON"
2. With sensor "OFF"(Steering wheel=straight ahead), measure the voltage between terminal 2 of the sensor harness connector and chassis ground.

Specification : Approx. 0V

3. Is voltage within the specification?

YES

▶ Go to next step as below

NO

▶ Repair as necessary and go to "Verification of Vehicle Repair" procedure.

GROUND CIRCUIT INSPECTION E76E8B62

1. Ignition "OFF"
2. Disconnect sensor harness connector and measure resistance between terminal 1 of the sensor harness connector and chassis ground

Specification :	Approx. 0Ω

3. Is resistance within the specification?

YES

▶ Go to next step as below

NO

▶ Repair as necessary and go to "Verification of Vehicle Repair" procedure.

COMPONENT INSPECTION E282F49D

Refer to DTC P0552.

VERIFICATION OF VEHICLE REPAIR ED749629

Refer to DTC P0552.

DTC P0560 SYSTEM VOLTAGE

COMPONENT LOCATION E0CF8FA2

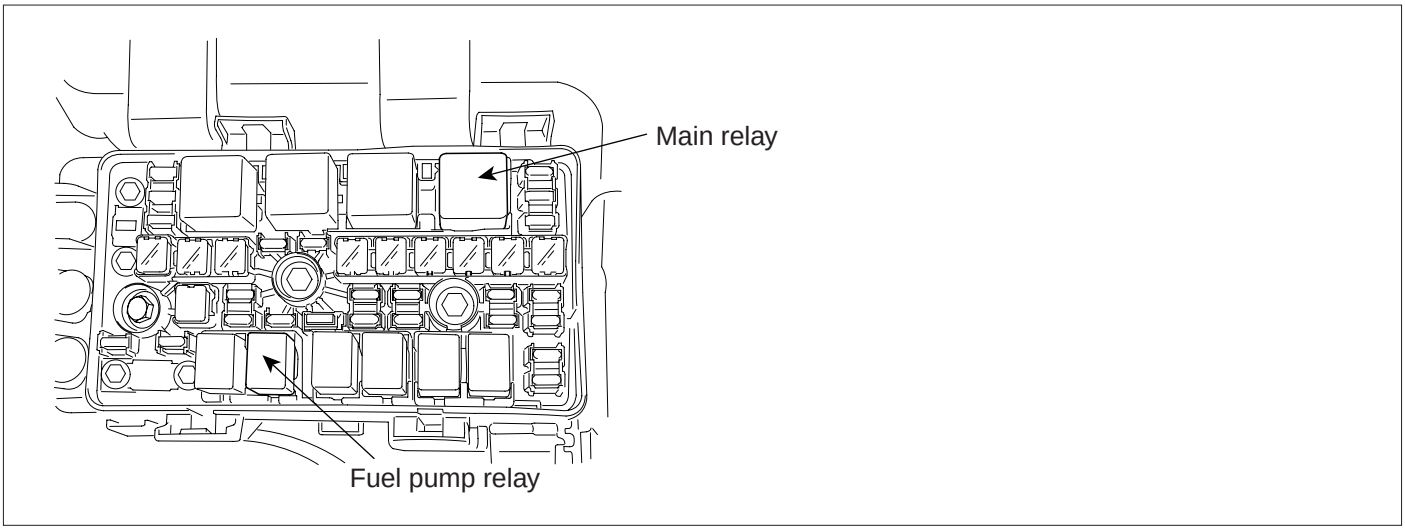

EFRF019A

GENERAL DESCRIPTION E620B395

The ECM provides ground to one side of the coil of the main relay and the other side is connected to the battery. The ECM monitors battery voltage and the voltage after the main relay.

DTC DESCRIPTION E6BFAC96

The ECM measures the voltage from ignition key and from main relay respectively and compares two voltages. This comparison will watch if the Main Relay has switched and remains on after ignition Key-On and if it has switched off after the ignition Key-Off. The ECM sets DTC P0560 if the voltage after Main Relay is lower than a predetermined threshold after ignition key-on or higher than a predetermined threshold after ignition key-off.

DTC DETECTING CONDITION EF3B3337

Item		Detecting Condition	Possible Cause
DTC Strategy		• Check main relay for switching ON/OFF time	• Open or short circuit • Poor connection in connectors
Enable Conditions	Case1	• Ignition "ON" • Ignition SW. voltage >10V • Time after Ignition "ON" > 0.05sec.	
	Case2	• Power Latch Phase has run out after Key-Off	
	Case3	• Battery voltage >1.74V • Ignition voltage > 1V • Time after ignition "ON" > 0.3sec. • No Actuator Test mode for Main Relay with Scan Tool	
Threshold Value	Case1	• Ignition "ON" & Battery voltage < 6V	
	Case2	• After power latch & Battery voltage > threshold	
	Case3	• Battery voltage - Ignition voltage > threshold	
Diagnostic Time		• 0.2sec.	

SCHEMATIC DIAGRAM E32EB0B6

[Circuit Diagram]

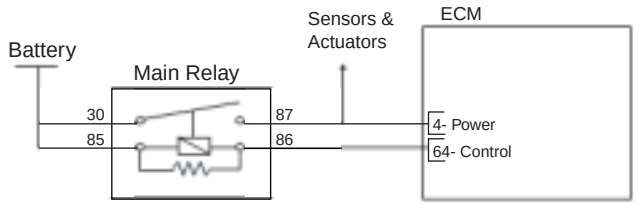

[Connection Information]

Terminal	Connected to	Funtion
87	-	Power Supply
87	ECM Terminal 4	Power
30	Battery	Power
86	ECM Terminal 64	Control
85	Battery	Power

[Harness Connector]

ECM

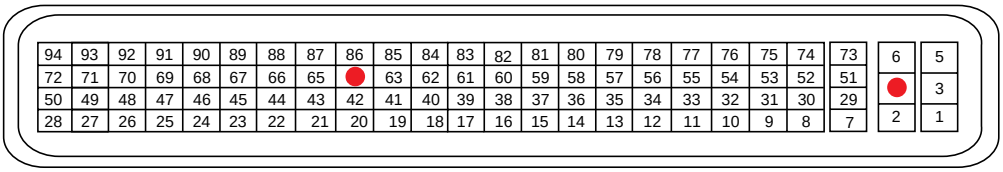

C44

EFRF300Q

MONITOR DTC STATUS EB058E6C

1. Connect scan tool and select "Diagnostic Trouble Codes(DTCs)" mode
2. Press F4(DTAL) to select DTC information from the DTCs menu
3. Confirm that "DTC Readiness Flag" indicates "Complete". If not, drive the vehicle within conditions noted in the freeze frame data or enable conditions
4. Read "DTC Status" parameter

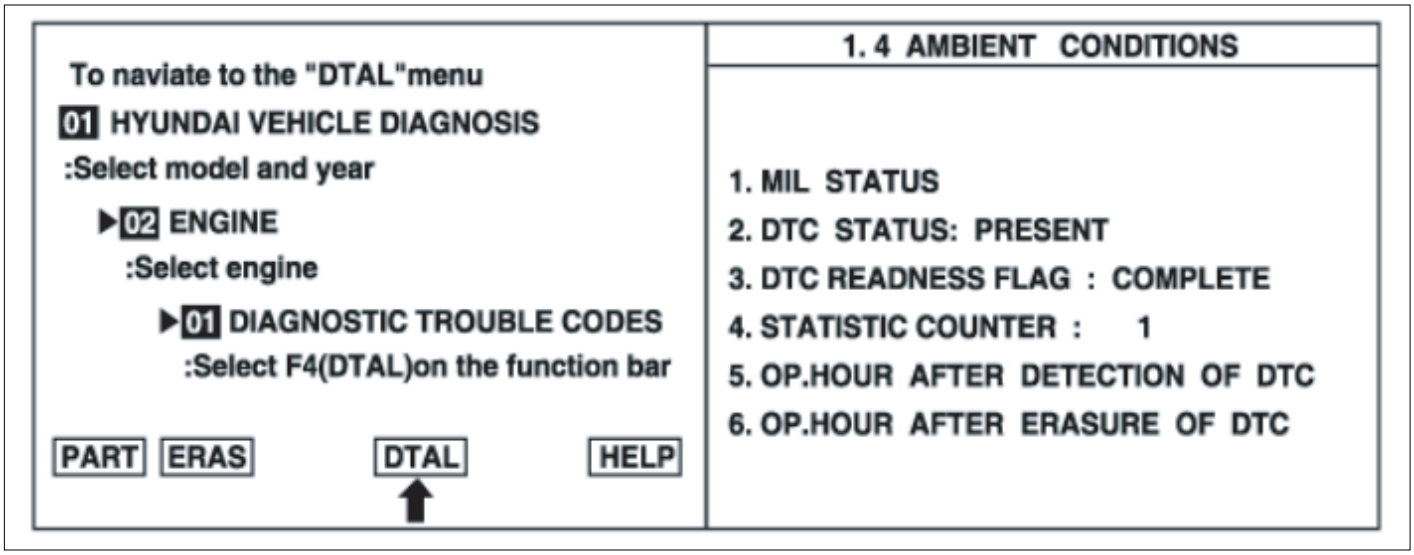

EFRF200D

5. Is parameter displayed "History(Not Present) fault"?

NOTE

- *History (Not Present) fault : DTC occurred but has been cleared.*
- *Present fault : DTC is occurring at present time.*

YES

▶ Fault is intermittent caused by poor contact in the sensor's and/or ECM's connector or was repaired and ECM memory was not cleared. Thoroughly check connectors for loose or poor connections, bending, corrosion, contamination, deterioration, or damage. Repair or replace as necessary and go to "Verification of Vehicle Repair" procedure

NO

▶ Go to next step as below

COMPONENT INSPECTION ECA8BAEC

1. Ignition "OFF"
2. Remove the main relay
3. Apply 12V and a ground to 86 and 85 of the main relay(Component side)
4. Check if the main relay works well when it is energized. (If the main relay works normally, a clicking sound can be heard.)
5. Does the main relay operate normally?

YES

▶ Go to next step as below

NO

▶ Check relay for contamination, deterioration, or damage. Substitute with a known-good relay and check for proper operation. If the problem is corrected, replace relay and then go to "Verification of Vehicle Repair" procedure

TERMINAL AND CONNECTOR INSPECTION ED99C3A5

1. Many malfunctions in the electrical system are caused by poor harness(es) and terminals. Faults can also be caused by interference from other electrical systems, and mechanical or chemical damage.
2. Thoroughly check connectors for looseness, poor connection, bending, corrosion, contamination, deterioration, or damage.
3. Has a problem been found?

YES

▶ Repair as necessary and go to "Verification of Vehicle Repair" procedure

NO

▶ Go to next step as below

POWER CIRCUIT INSPECTION E7DF2EAA

1. Ignition "ON" & Engine "OFF".
2. Measure the voltage between terminal 30 of the main relay connector and chassis ground.
3. Measure the voltage between terminal 85 of the main relay connector and chassis ground.

Specification : Approx. B+

4. Is voltage within the specification?

YES

1. With ignition "OFF", disconnect ECM connetor
2. Check continuity between terminal 87 of the main relay harness connector and terminal 4 of the ECM harness connector.
3. If OK, go to next step as below
   If NG, repair as necessary and go to "Verification of Vehicle Repair" procedure.

NO

▶ Repair as necessary and go to "Verification of Vehicle Repair" procedure.

CONTROL CIRCUIT INSPECTION E3F1E9E4

1. Check for short to ground in control circuit
   1) Ignition "OFF"
   2) Measure resistance between terminal 86 of the relay connector and chassis ground

Specification : Infinite

   3) Is resistance within the specification?

YES

▶ Go to next step as below

NO

▶ Repair as necessary and go to "Verification of Vehicle Repair" procedure.

2. Check for short to power in control circuit
   1) Disconnect ECM connector
   2) Ignition "ON" and Engine "OFF"
   3) Measure voltage between terminal 86 of the relay connector and chassis ground

Specification : Approx 0V

4) Is voltage within the specification?

YES

▶ Go to next step as below

NO

▶ Repair as necessary and go to "Verification of Vehicle Repair" procedure.

3. Check for open in control harness

1) Measure resistance between terminals 86 of the relay connector and 64 of the ECM harness connector

Specification : Approx 0Ω

2) Is resistance within the specification?

YES

▶ Check for poor connection between ECM and component: backed out terminal, improper mating, broken locks or poor terminal to wire connection. Repair as necessary and go to "Verification of Vehicle Repair" procedure

NO

▶ Repair as necessary and go to "Verification of Vehicle Repair" procedure.

VERIFICATION OF VEHICLE REPAIR E9F8AF73

After a repair, it is essential to verify that the fault has been corrected.

1. Connect scan tool and select "Diagnostic Trouble Codes(DTCs)" mode
2. Press F4(DTAL) and confirm that "DTC Readiness Flag" indicates "Complete". If not, drive the vehicle within conditions noted in the freeze frame data or enable conditions
3. Read "DTC Status" parameter
4. Is parameter displayed "History(Not Present) fault"?

YES

▶ System performing to specification at this time. Clear the DTC

NO

▶ Go to the applicable troubleshooting procedure

DTC P0562 SYSTEM VOLTAGE LOW

COMPONENT LOCATION ED8E8B18

Refer to DTC P0560.

GENERAL DESCRIPTION E82AA9E7

Refer to DTC P0560.

DTC DESCRIPTION EB99064E

ECM sets DTC P0562 if the ECM detects system voltage lower than the possible range of battery voltage.

DTC DETECTING CONDITION E457889D

Item	Detecting Condition	Possible Cause
DTC Strategy	• Diagnostic Time	• Poor connection in connectors • Faulty charging system
Enable Conditions	• Ignition key ON • Engine running • Vehicle speed > 10km/h(6mph)	
Threshold Value	• Battery voltage < 10V	
Diagnostic Time	• 240sec.	

SCHEMATIC DIAGRAM E5D8172A

Refer to DTC P0560.

MONITOR DTC STATUS EA2475F1

NOTE

If any codes relating to system voltage(P0560) is stored, do ALL REPAIRS associated with those codes before proceeding with troubleshooting

1. Connect scan tool and select "Diagnostic Trouble Codes(DTCs)" mode
2. Press F4(DTAL) to select DTC information from the DTCs menu
3. Confirm that "DTC Readiness Flag" indicates "Complete". If not, drive the vehicle within conditions noted in the freeze frame data or enable conditions
4. Read "DTC Status" parameter

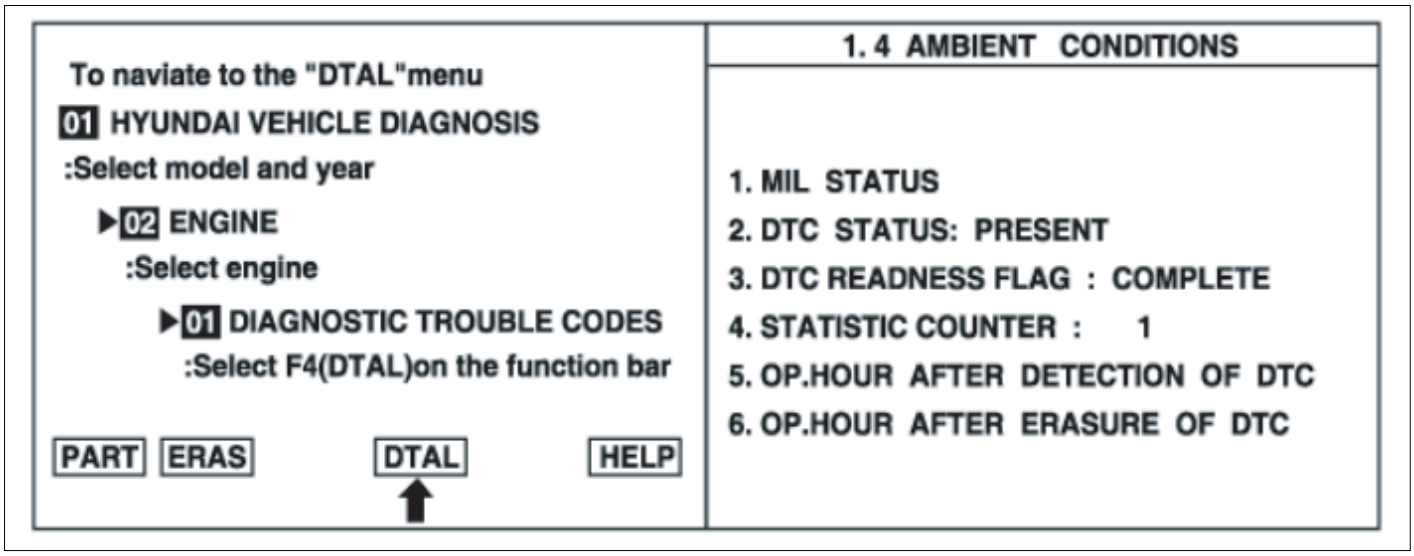

EFRF200D

5. Is parameter displayed "History(Not Present) fault"?

NOTE

- *History (Not Present) fault : DTC occurred but has been cleared.*
- *Present fault : DTC is occurring at present time.*

YES

▶ Fault is intermittent caused by poor contact in the sensor's and/or the ECM's connector, which was repaired but ECM memory was not cleared. Thoroughly check connectors for looseness, poor connection, bending, corrosion, contamination, deterioration, or damage. Repair or replace as necessary and go to "Verification of Vehicle Repair" procedure

NO

▶ Go to next step as below

TERMINAL AND CONNECTOR INSPECTION EE06C6D9

1. Many malfunctions in the electrical system are caused by poor harness(es) and terminals. Faults can also be caused by interference from other electrical systems, and mechanical or chemical damage.

2. Thoroughly check connectors for looseness, poor connection, bending, corrosion, contamination, deterioration, or damage.

3. Has a problem been found?

YES

▶ Repair as necessary and go to "Verification of Vehicle Repair" procedure

NO

▶ Go to "Charging System Inspection" procedure

CHARGING SYSTEM E277DD1E

1. Check battery condition and Generator output
2. Are battery conditions and Generator output both okay?

YES

▶ Check for poor connection between ECM and component: backed out terminal, improper mating, broken locks or poor terminal to wire connection. Repair as necessary and go to "Verification of Vehicle Repair" procedure

NO

▶ Repair as necessary and go to "Verification of Vehicle Repair" procedure

VERIFICATION OF VEHICLE REPAIR E82C1963

Refer to DTC P0560.

DTC P0563 SYSTEM VOLTAGE HIGH

COMPONENT LOCATION EE747AE9

Refer to DTC P0560.

GENERAL DESCRIPTION E713A758

Refer to DTC P0560.

DTC DESCRIPTION EC430C81

ECM sets DTC P0563 if the ECM detects system voltage higher than the possible range of battery voltage.

DTC DETECTING CONDITION E0DB3E9C

Item	Detecting Condition	Possible Cause
DTC Strategy	• Battery voltage check	• Poor connection in connectors • Faulty charging system
Enable Conditions	• Ignition key ON • Engine running • Vehicle speed > 10km/h(6mph)	
Threshold Value	• Battery voltage >16V	
Diagnostic Time	• 240sec.	

SCHEMATIC DIAGRAM E6A9A6C9

Refer to DTC P0560.

MONITOR DTC STATUS E4B0814D

Refer to DTC P0562.

TERMINAL AND CONNECTOR INSPECTION E8366E74

1. Many malfunctions in the electrical system are caused by poor harness(es) and terminals. Faults can also be caused by interference from other electrical systems, and mechanical or chemical damage.

2. Thoroughly check connectors for looseness, poor connection, bending, corrosion, contamination, deterioration, or damage.

3. Has a problem been found?

YES

▶ Repair as necessary and go to "Verification of Vehicle Repair" procedure

NO

▶ Go to "Charging System Inspection" procedure

CHARGING SYSTEM E58E48DD

1. Check battery condition and Generator output
2. Are battery conditions and Generator output both okay?

YES

▶ Check for poor connection between ECM and component: backed out terminal, improper mating, broken locks or poor terminal to wire connection. Repair as necessary and go to "Verification of Vehicle Repair" procedure

NO

▶ Repair as necessary and go to "Verification of Vehicle Repair" procedure

VERIFICATION OF VEHICLE REPAIR E27849C2

Refer to DTC P0560.

DTC P0564 CRUISE CONTROL MULTI-FUNCTION INPUT "A" CIRCUIT

GENERAL DESCRIPTION EFA9CAB9

The cruise control system keeps the vehicle running at a fixed speed until a signal canceling this fixed speed is received. When the main switch "AUTO CRUISE" is turned on with vehicle in the running mode, the battery voltage is applied to the ECM. When a signal from the control switch is input to the ECM while the vehicle is in state, the cruise control actuator is activated to operate the system.Also, while the system is operating, "AUTO CRUISE" indicator lamp in the meter assembly lights up. In case of the cruise control system failure, the symptoms such as acceleration failure and vehicle speed setting failure will occur

DTC DESCRIPTION E2CBC91C

ECM sets DTC P0564 if the ECM detects signal from switch exceeds threshold value.

DTC DETECTING CONDITION E3E45C7C

Item		Detecting Condition	Possible Cause
DTC Strategy	Case1	• Check invalid voltage range	• Open or short in harness • Poor connection in connectors • Faulty cruise remote control switch
	Case2	• Check SET/COAST switch stuck	
	Case3	• Check RES/ACC switch stuck	
Enable Conditions		• Ignition ON • Engine running	
Thresh-old Value	Case1	• Voltage from Cruise switch > 4.8V for more than 30sec. or Voltage from cruise switch is out of range	
	Case2	• In no cruise active condition, voltage from cruise switch is in “ SET/COAST” range for more than 60sec.	
	Case3	• In no cruise active condition, voltage from cruise switch is in “ RES/ACC” range for more than 60sec	
Diagnos-tic Time	Case1	• 31sec.	
	Case2	• 61sec.	
	Case3	• 61sec.	

SCHEMATIC DIAGRAM E39DF617

[Circuit Diagram]

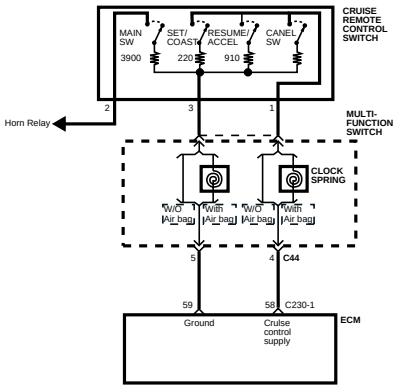

[Connection Information]

Terminal	Connected to	Funtion
1	ECM Terminal 58	Cruise control SW
2	ECM Terminal 59	SW Ground

[Harness Connector]

ECM

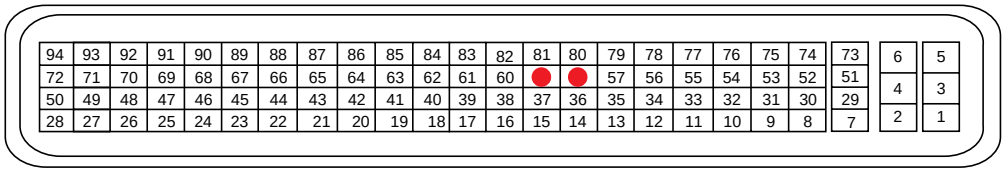

C44

EFRF103J

SIGNAL WAVEFORM EDCB6E7D

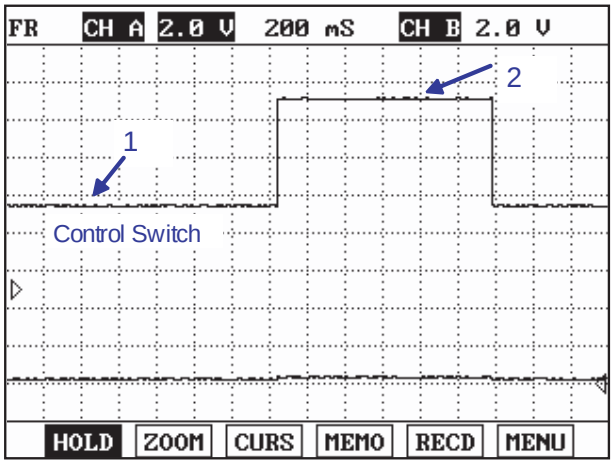

Fig.1

1: Releasing switching nobe
2: Depressing switching nobe

EFRF901F

MONITOR DTC STATUS E989CA91

1. Connect scan tool and select "Diagnostic Trouble Codes(DTCs)" mode

2. Press F4(DTAL) to select DTC information from the DTCs menu

3. Confirm that "DTC Readiness Flag" indicates "Complete". If not, drive the vehicle within conditions noted in the freeze frame data or enable conditions

4. Read "DTC Status" parameter

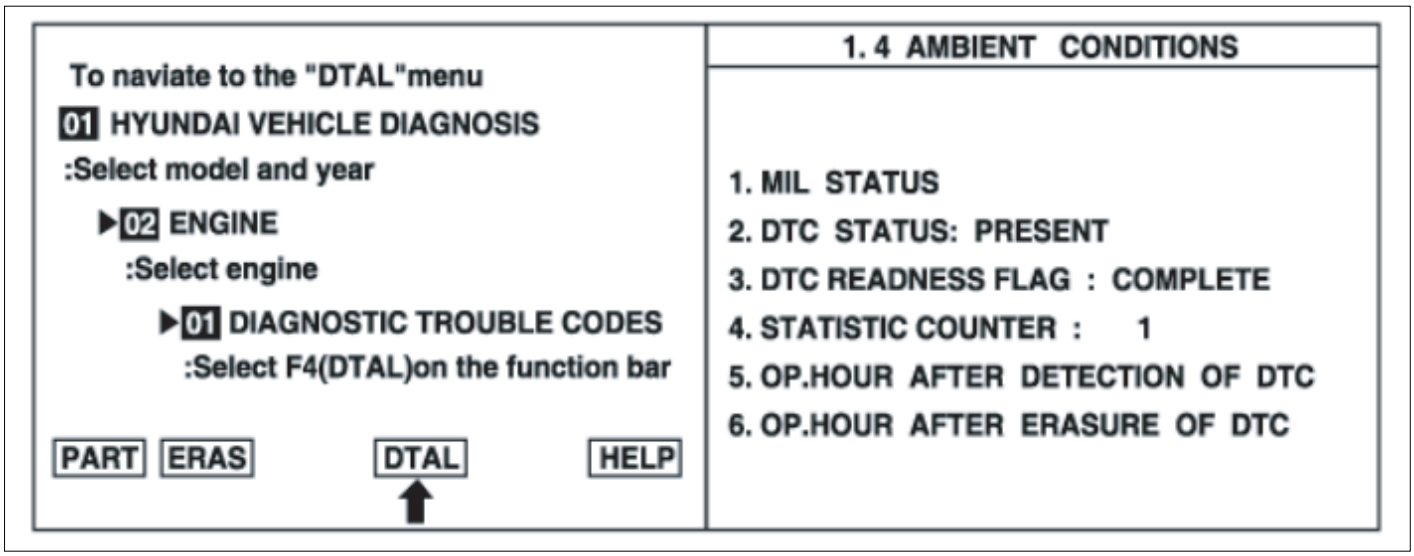

EFRF200D

5. Is parameter displayed "History(Not Present) fault"?

NOTE

- *History (Not Present) fault : DTC occurred but has been cleared.*
- *Present fault : DTC is occurring at present time.*

YES

▶ Fault is intermittent caused by poor contact in the sensor's and/or ECM's connector or was repaired and ECM memory was not cleared. Thoroughly check connectors for loose or poor connections, bending, corrosion, contamination, deterioration, or damage. Repair or replace as necessary and go to "Verification of Vehicle Repair" procedure

NO

▶ Go to next step as below

POWER CIRCUIT INSPECTION E9DA5271

1. Ignition "OFF"

2. Disconnect multi-function switch connector

3. Ignition "ON" & Engine "OFF"

4. Measure voltage between terminal 6 of the multi-function switch harness connector and chassis ground

Specification : Approx. B+

5. Is voltage within the specification?

YES

▶ Go to "Ground Circuit Inspection"procedure

NO

▶ Check for an open or short to ground in the power circuit. Repair as necessary and go to "Verification of Vehicle Repair" procedure.

GROUND CIRCUIT INSPECTION E361EE81

1. Ignition "OFF"
2. Reconnect multi-function switch harness connector
3. Disconnect ECM harness connector
4. Measure resistance between terminal 59 of the ECM harness connector and chassis ground

Specification : Approx. 0Ω

5. Is resistance within the specification?

YES

▶ Go to "Control Circuit Inspection"procedure

NO

▶ Check for an open or short to ground in the power circuit. Repair as necessary and go to "Verification of Vehicle Repair" procedure.

CONTROL CIRCUIT INSPECTION E8FCADDB

1. Ignition "ON"
2. Measure the voltage between terminal 58 of the sensor harness connector and chassis ground while depressing switching nobe

Specification : Approx. B+

3. Is voltage within the specification?

YES

▶ Go to next step as below

NO

▶ Repair as necessary and go to "Verification of Vehicle Repair" procedure.

TERMINAL AND CONNECTOR INSPECTION EA09CFC2

1. Many malfunctions in the electrical system are caused by poor harness(es) and terminals. Faults can also be caused by interference from other electrical systems, and mechanical or chemical damage.
2. Thoroughly check connectors for looseness, poor connection, bending, corrosion, contamination, deterioration, or damage.
3. Has a problem been found?

YES

▶ Repair as necessary and go to "Verification of Vehicle Repair" procedure

NO

▶ Go to "Charging System Inspection" procedure

COMPONENT INSPECTION E918DD29

1. Ignition "OFF"
2. Measure cruise remocon switch resistance as follows.(Component side)

SPECIFICATION

Terminal	Condition	Resistance
1 & 2	Depressing Main SW	3.9㎏Ω ± 5%
1 & 3	Depressing Cancel SW	0Ω
	Depressing Set/Coast SW	220Ω ± 5%
	Depressing Resume/Accel SW	910Ω ± 5%

3. Is resistance within the specification?

YES

▶ Check for poor connection between ECM and component: backed out terminal, improper mating, broken locks or poor terminal to wire connection. Repair as necessary and go to "Verification of Vehicle Repair" procedure

NO

▶ Substitute with a known-good cruise remote control switch and check for proper operation. If the problem is corrected, replace cruise remote control switch and then go to "Verification of Vehicle Repair" procedure.

VERIFICATION OF VEHICLE REPAIR E88B957B

After a repair, it is essential to verify that the fault has been corrected.

1. Connect scan tool and select "Diagnostic Trouble Codes(DTCs)" mode
2. Press F4(DTAL) and confirm that "DTC Readiness Flag" indicates "Complete". If not, drive the vehicle within conditions noted in the freeze frame data or enable conditions
3. Read "DTC Status" parameter
4. Is parameter displayed "History(Not Present) fault"?

YES

▶ System performing to specification at this time. Clear the DTC

NO

▶ Go to the applicable troubleshooting procedure.

DTC P0600 CAN COMMUNICATION BUS

GENERAL DESCRIPTION E21B2837

A communication line exists between the Engine Control Module(ECM) and the Transaxle Control Module(TCM). The communication is through a Control Area Network(CAN). Without CAN communication, an independent pin and wiring is needed to receive a sensor information from a ECM. The more information to be communicated, the more wirings is required. In case of CAN communication type, all the information need to be communicated among control modules such as ECM and ABS control module use CAN lines.

DTC DESCRIPTION E61FFEF5

The ECM determines CAN commuication error and sets DTC P0600 if communication with other engine control devices (e.g. ABS) via CAN is impossible or ECM detects that communication time via CAN exceeds threshold value.

DTC DETECTING CONDITION ED7FBE5E

Item		Detecting Condition	Possible Cause
DTC Strategy	Case1	• Check CAN message transfer status	• Open or short in CAN line • Poor connection in connectors • Faulty ECM
	Case2	• No Message coming from TCM	
Enable Conditions		• Battery voltage 〉 10V • Engine speed 〉 30 rpm	
Thresh-old Value	Case1	• No message	
	Case2	• No message during 100ms	
Diagnos-tic Time	Case1	• 1sec.	
	Case2	• 0.1sec.	

SCHEMATIC DIAGRAM E9346785

[Circuit Diagram]

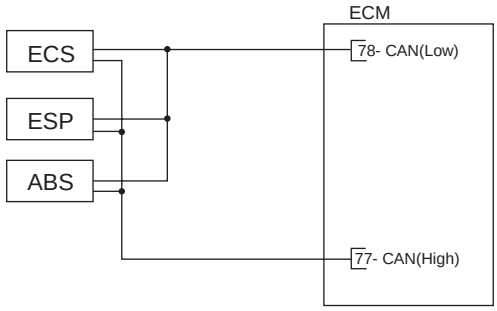

[Connection Information]

Terminal	Connected to	Funtion
1	ECM Terminal 77	CAN(HIGH)
2	ECM Terminal 78	CAN(LOW)

[Harness Connector]

ECM

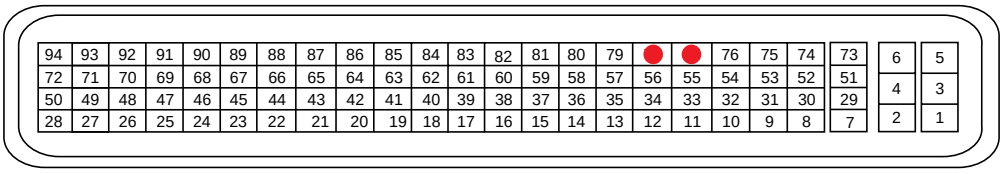

C44

EFRF300T

SIGNAL WAVEFORM AND DATA EFB68CB6

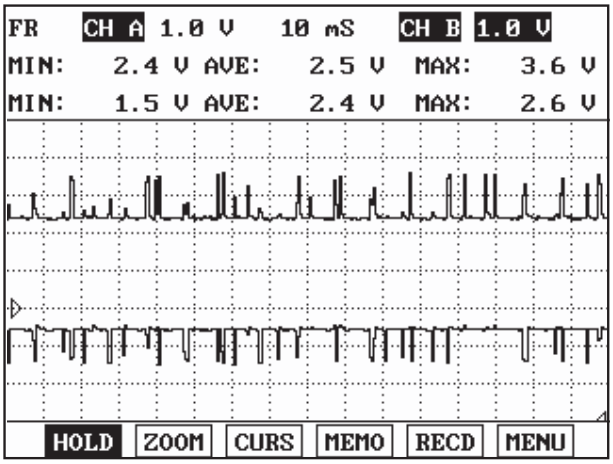

Fig.1

Fig.1) Normal waveform with ignition ON

EFRF200S

MONITOR DTC STATUS E8B53088

1. Connect scan tool and select "Diagnostic Trouble Codes(DTCs)" mode
2. Press F4(DTAL) to select DTC information from the DTCs menu
3. Confirm that "DTC Readiness Flag" indicates "Complete". If not, drive the vehicle within conditions noted in the freeze frame data or enable conditions
4. Read "DTC Status" parameter

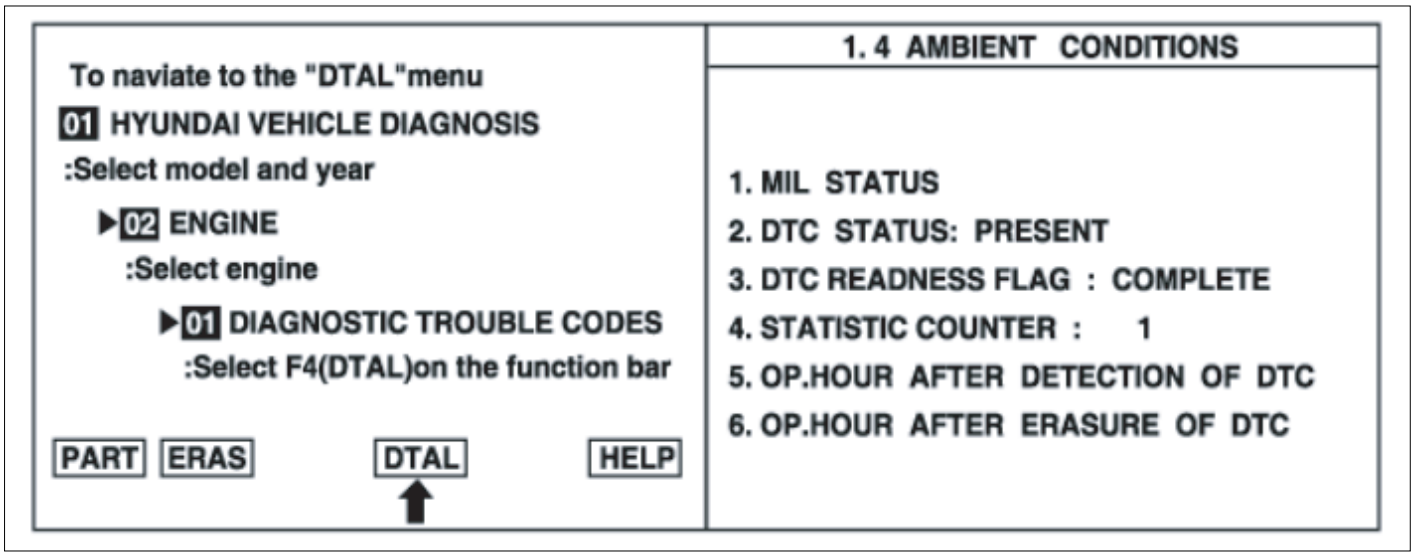

EFRF200D

5. Is parameter displayed "History(Not Present) fault"?

NOTE

- *History (Not Present) fault : DTC occurred but has been cleared.*
- *Present fault : DTC is occurring at present time.*

YES

▶ Fault is intermittent caused by poor contact in the sensor's and/or the ECM's connector, which was repaired but ECM memory was not cleared. Thoroughly check connectors for looseness, poor connection, bending, corrosion, contamination, deterioration, or damage. Repair or replace as necessary and go to "Verification of Vehicle Repair" procedure

NO

▶ Go to next step as below

CAN HIGH LINE INSPECTION

1. Ignition "OFF"
2. Disconnect ECM harness connector
3. Measure resistance between terminals 3 and 11 of the Data Link Connector(DLC) on the lower part of the driver side.

Specification : Approx. 110~130Ω

4. Is resistance within the specification?

YES

▶ Go to "Component Inspection" procedure

NO

▶ Go to next step as below

OPEN OR SHORT LINE INSPECTION

1. Check CAN High Line for open or short
   1) Measure resistance between terminal 3 of the Data Link Connector(DLC) and chassis ground.

Specification : Approx. 10~15kΩ

   2) Is resistance within the specification?

YES

▶ Go to next step ad below

NO

▶ If approx. 0Ω , repair short to ground circuit between ECM and other control module or vertical resistor. If infinite, repair open circuit between ECM and other control module or vertical resistor. And then go to "Verification of Vehicle Repair" procedure

2. Check CAN Low Line for open or short
   1) Measure resistance between terminal 11 of the Data Link Connector(DLC) and chassis ground.

Specification : Approx. 10~15kΩ

   2) Is resistance within the specification?

YES

▶ Go to next step ad below

NO

▶ If approx. 0Ω , repair short to ground circuit between ECM and other control module or vertical resistor. If infinite, repair open circuit between ECM and other control module or vertical resistor. And then go to "Verification of Vehicle Repair" procedure

TERMINAL AND CONNECTOR INSPECTION E8317230

1. Many malfunctions in the electrical system are caused by poor harness(es) and terminals. Faults can also be caused by interference from other electrical systems, and mechanical or chemical damage.
2. Thoroughly check connectors for looseness, poor connection, bending, corrosion, contamination, deterioration, or damage.
3. Has a problem been found?

YES

▶ Repair as necessary and go to "Verification of Vehicle Repair" procedure

NO

▶ Go to "Charging System Inspection" procedure

COMPONENT INSPECTION E0CFEFE7

1. Measure resistance between terminals 77 and 78 of the ECM connector(ECM side)

Specification : Approx. 110~130Ω

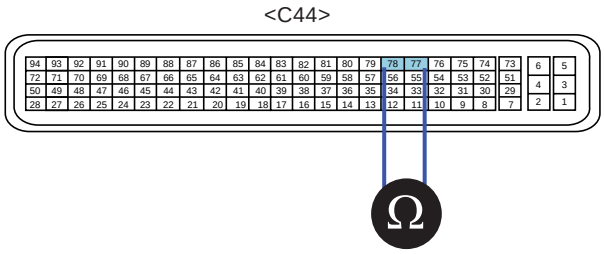

X6008

2. Is resistance within the specification?

YES

▶ Check for poor connection between ECM and component: backed out terminal, improper mating, broken locks or poor terminal to wire connection. Repair as necessary and go to "Verification of Vehicle Repair" procedure

NO

▶ Check ECM for contamination, deterioration, or damage. Substitute with a known-good ECM and check for proper operation. If the problem is corrected, replace ECM and then go to "Verification of Vehicle Repair" procedure

NOTE

It is necessary to perform the TPS adaptation procedure with Scan tool when the throttle body assembly or ECM is replaced.

■ TPS adaptation procedure

1. Erase previous TPS adaptation value using Scan tool.
2. Ignition "OFF" and then "ON" without cranking. Wait for 10 seconds under enable conditions
   - Enable conditions : Battery 〉 10V & Intake Air Temp. 〉 5.3℃(41.5°F) & 5.3℃(41.5°F) 〈 Engine Coolant Temp. 〈 99.8℃(211.6°F)
3. After TPS adaptation, the system normality should be confirmed by reading out "FMY" on the Scan Tool

VERIFICATION OF VEHICLE REPAIR E69EB740

After a repair, it is essential to verify that the fault has been corrected.

1. Connect scan tool and select "Diagnostic Trouble Codes(DTCs)" mode
2. Press F4(DTAL) and confirm that "DTC Readiness Flag" indicates "Complete". If not, drive the vehicle within conditions noted in the freeze frame data or enable conditions
3. Read "DTC Status" parameter
4. Is parameter displayed "History(Not Present) fault"?

YES

▶ System performing to specification at this time. Clear the DTC

NO

▶ Go to the applicable troubleshooting procedure.

DTC P0605 INTERNAL CONTROL MODULE READ ONLY MEMORY(ROM) ERROR

COMPONENT LOCATION E26ADF96

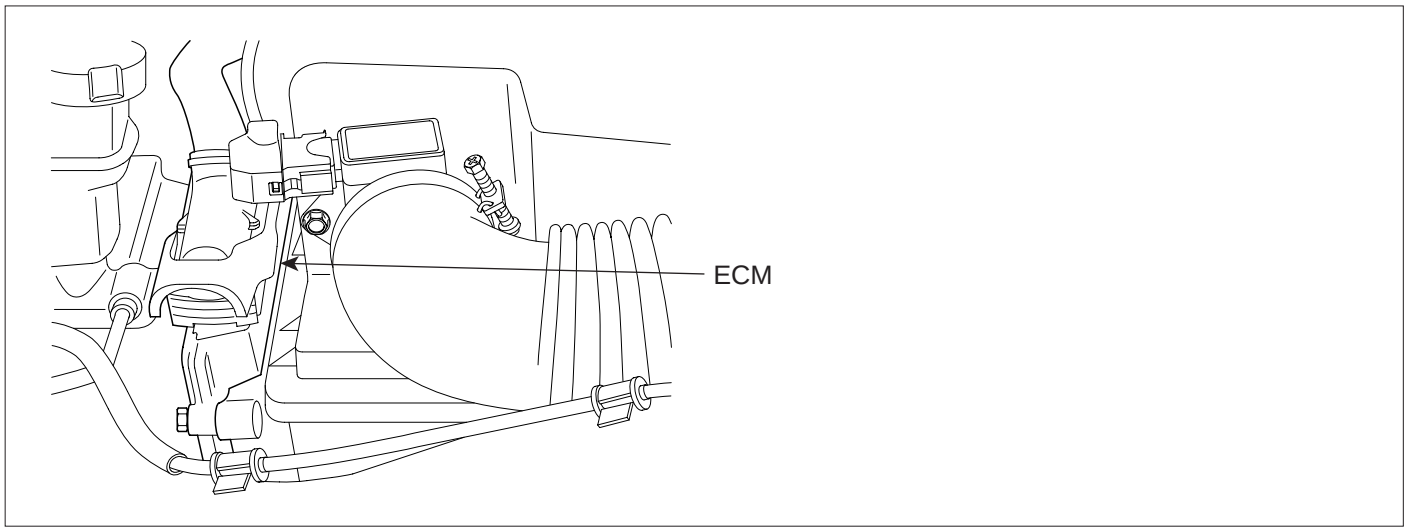

EFRF008A

GENERAL DESCRIPTION ED961DE5

A malfunction is detected by using a checksum technique for verifying data. The digital data is composed of zeros and ones. A checksum is the total of all ones in a string of data. By comparing the checksum value with a stored value, a malfunction can be detected.

DTC DESCRIPTION E0BB9F7B

The ECM monitors RAM areas and communication connections between microcontroller and output drivers and sets DTC P0605 if failure is detected.

DTC DETECTING CONDITION E6B034EB

Item	Detecting Condition	Possible Cause
DTC Strategy	• ECM internal process monitoring	• Poor connection in connectors • Faulty ECM
Enable Conditions	• Ignition "ON"	
Threshold Value	• ECM internal error	
Diagnostic Time	• Continuous	

MONITOR DTC STATUS E52D0EBE

1. Connect scan tool and select "Diagnostic Trouble Codes(DTCs)" mode
2. Press F4(DTAL) to select DTC information from the DTCs menu
3. Confirm that "DTC Readiness Flag" indicates "Complete". If not, drive the vehicle within conditions noted in the freeze frame data or enable conditions
4. Read "DTC Status" parameter

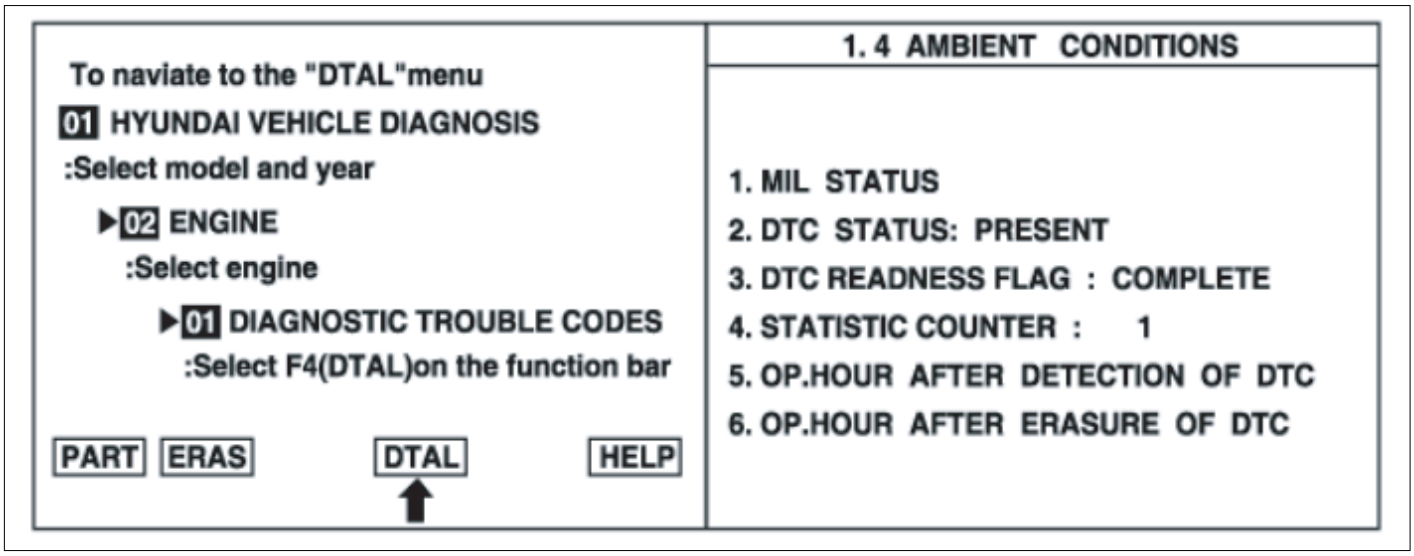

EFRF200D

5. Is parameter displayed "History(Not Present) fault"?

NOTE

- *History (Not Present) fault : DTC occurred but has been cleared*
- *Present fault : DTC is occurring at present time*

YES

▶ Fault is intermittent caused by poor contact in the sensor's and/or the ECM's connector, which was repaired but ECM memory was not cleared. Thoroughly check connectors for looseness, poor connection, bending, corrosion, contamination, deterioration, or damage. Repair or replace as necessary and go to "Verification of Vehicle Repair" procedure

NO

▶ Go to next step as below

BACK UP VOLTAGE INSPECTION

1. Ignition "OFF"
2. Disconnect ECM connector
3. Ignition "ON"
4. Measure voltage between terminal 6 of the ECM harness connector and chassis ground

Specification : Remain stable at battery voltage

5. Are circuits remaining stable at battery voltage?

YES

▶ Using a scan tool, check ECM software version and upgrade as necessary. If version is the newest one, go to "Verification of Vehicle Repair" procedure

NO

▶ If voltage fluctuates, check circuit for loose, bent or corroded terminals, Repair as necessary and go to "Verification of Vehicle Repair" procedure

VERIFICATION OF VEHICLE REPAIR E4B4AE75

After a repair, it is essential to verify that the fault has been corrected.

1. Connect scan tool and select "Diagnostic Trouble Codes(DTCs)" mode
2. Press F4(DTAL) and confirm that "DTC Readiness Flag" indicates "Complete". If not, drive the vehicle within conditions noted in the freeze frame data or enable conditions
3. Read "DTC Status" parameter
4. Is parameter displayed "History(Not Present) fault"?

YES

▶ System performing to specification at this time. Clear the DTC

NO

▶ Go to the applicable troubleshooting procedure.

DTC P0625 GENERATOR FIELD/F TERMINAL CIRCUIT LOW

COMPONENT LOCATION E7EE2DE3

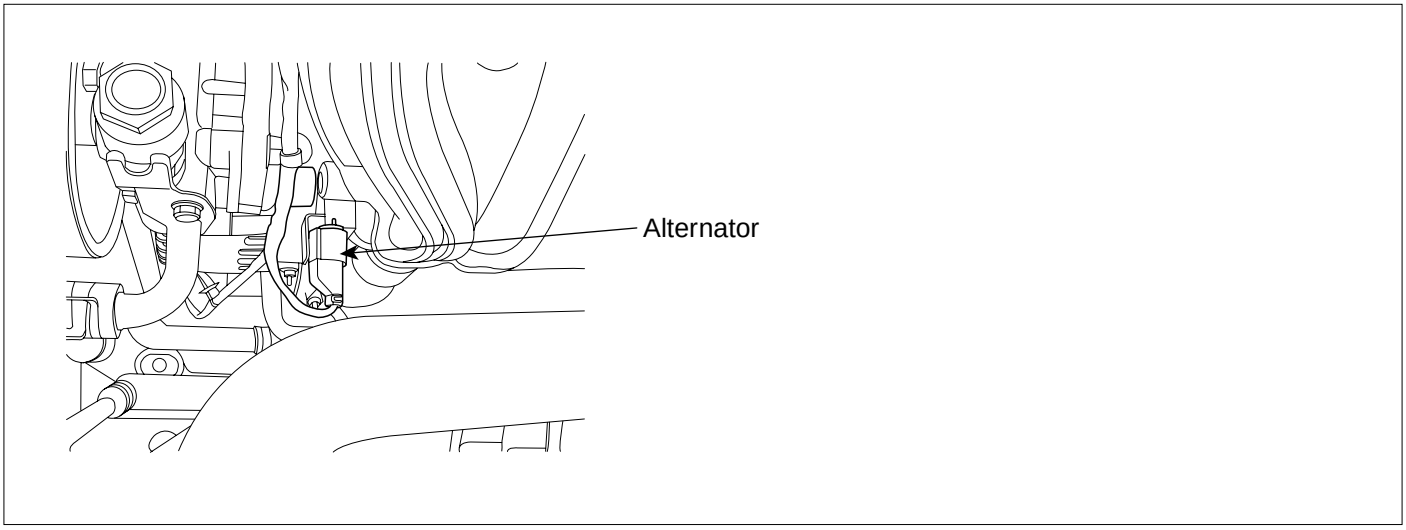

EFRF002A

GENERAL DESCRIPTION EF7226AE

Alternator output and power demand of all electrical loads and systems must be matched to each other as ideally as possible so that the entire system is reliable and trouble-free in operation. The ECM monitors alternator output deviation from the signal of the FR terminal of the alternator when the engine is running

DTC DESCRIPTION E5ECAB9F

ECM sets DTC P0625 if the ECM detects output duty signal lower than the possible range of a properly operating alternator

DTC DETECTING CONDITION E1AD9977

Item		Detecting Condition	Possible Cause
DTC Strategy		• Electrical Check	• Short to battery in harness • Poor connection in connectors
Enable Conditions	Case1,2	• Time after ignition "ON" 〉 0.1sec. • Ignition "ON" & Engine "ON"	
	Case3	• No alternator error during engine stop • Battery voltage 〈16V • 600 〈 Engine speed(rpm) 〈4000 • 25℃(77°F) 〈 Coolant Temp.	
Threshold Value	Case1	• Alternator load 〉 35%	
	Case2	• Alternator load 〈 15%	
	Case3	• Alternator load 〈 2%	
Diagnostic Time	Case1,2	• 1sec.	
	Case2	• 20sec.	

SCHEMATIC DIAGRAM EAAFE3FF

[Circuit Diagram]

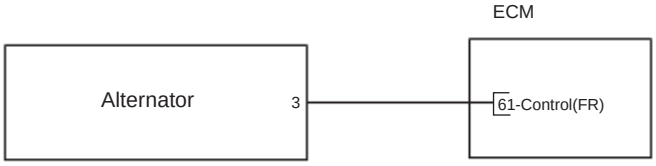

[Connection Information]

Terminal	Connected to	Funtion
3	ECM Terminal 61	Control(FR)

[Harness Connector]

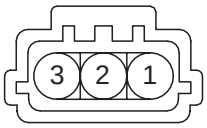

ECM

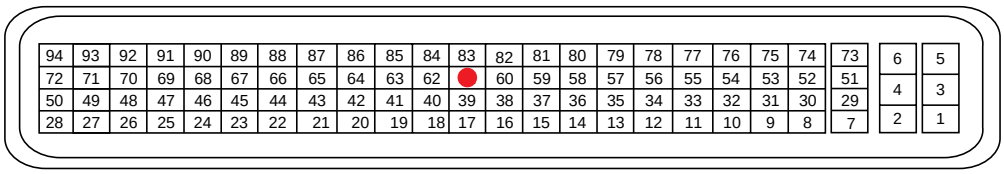

C44

EFRF300S

SIGNAL WAVEFORM AND DATA E0E4D89C

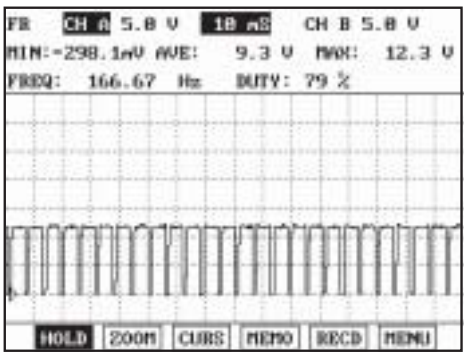

Fig. 1

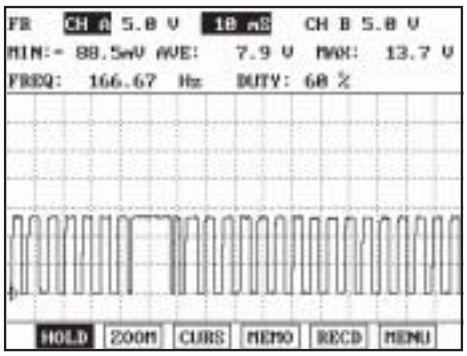

Fig. 2

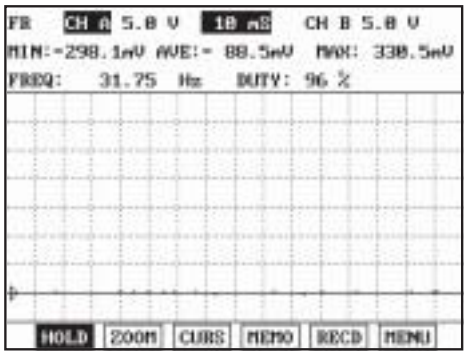

Fig. 3

Fig. 1) Normal waveform with ignition "ON"
Fig. 2) All electrical load "OFF" with idle
Fig. 3) A/C, Rear defrost, Head lamp "ON" with idle

EFRF200T

MONITOR DTC STATUS E1D1CFFC

1. Connect scan tool and select "Diagnostic Trouble Codes(DTCs)" mode
2. Press F4(DTAL) to select DTC information from the DTCs menu
3. Confirm that "DTC Readiness Flag" indicates "Complete". If not, drive the vehicle within conditions noted in the freeze frame data or enable conditions
4. Read "DTC Status" parameter

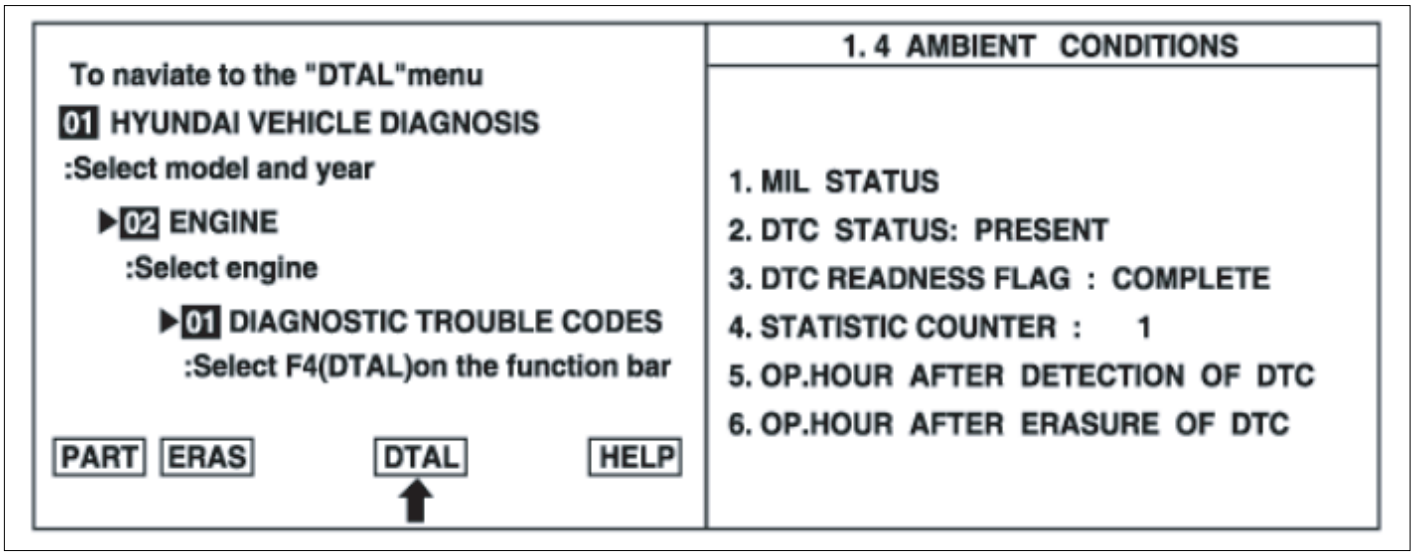

EFRF200D

5. Is parameter displayed "History(Not Present) fault"?

NOTE

- *History (Not Present) fault : DTC occurred but has been cleared*
- *Present fault : DTC is occurring at present time*

YES

▶ Fault is intermittent caused by poor contact in the sensor's and/or the ECM's connector, which was repaired but ECM memory was not cleared. Thoroughly check connectors for looseness, poor connection, bending, corrosion, contamination, deterioration, or damage. Repair or replace as necessary and go to "Verification of Vehicle Repair" procedure

NO

▶ Go to next step as below

CONTROL CIRCUIT INSPECTION E81F5917

1. Ignition "ON" & Engine "OFF"
2. Disconnect alternator connector
3. Measure voltage between terminals 3 of the alternator harness connector and chassis ground

Specification : Approx. 9~10V

NOTE

Normal waveform with ignition "ON"

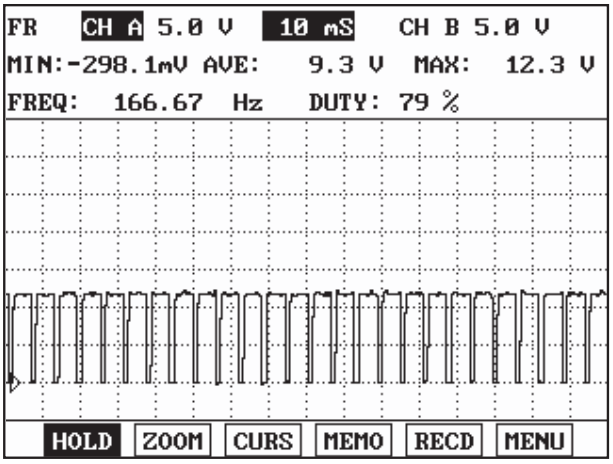

EFRF200U

Is voltage within the specification?

YES

▶ Go to next step as below

NO

▶ Repair as necessary and go to "Verification of Vehicle Repair" procedure

TERMINAL AND CONNECTOR INSPECTION E577F378

1. Many malfunctions in the electrical system are caused by poor harness(es) and terminals. Faults can also be caused by interference from other electrical systems, and mechanical or chemical damage.

2. Thoroughly check connectors for looseness, poor connection, bending, corrosion, contamination, deterioration, or damage.

3. Has a problem been found?

YES

▶ Repair as necessary and go to "Verification of Vehicle Repair" procedure

NO

▶ Check for poor connection between ECM and component: backed out terminal, improper mating, broken locks or poor terminal to wire connection. Repair as necessary and go to "Verification of Vehicle Repair" procedure

VERIFICATION OF VEHICLE REPAIR E69B1941

After a repair, it is essential to verify that the fault has been corrected.

1. Connect scan tool and select "Diagnostic Trouble Codes(DTCs)" mode

2. Press F4(DTAL) and confirm that "DTC Readiness Flag" indicates "Complete". If not, drive the vehicle within conditions noted in the freeze frame data or enable conditions

3. Read "DTC Status" parameter

4. Is parameter displayed "History(Not Present) fault"?

YES

▶ System performing to specification at this time. Clear the DTC

NO

▶ Go to the applicable troubleshooting procedure.

DTC P0626 GENERATOR FIELD/F TERMINAL CIRCUIT HIGH

COMPONENT LOCATION E07D3EDC

Refer to DTC P0625.

GENERAL DESCRIPTION E466A89A

Refer to DTC P0625.

DTC DESCRIPTION EB25ED2F

ECM sets DTC P0625 if the ECM detects output duty signal higher than the possible range of a properly operating alternator

DTC DETECTING CONDITION E120D7FF

Item	Detecting Condition	Possible Cause
DTC Strategy	• Electrical Check	• Open or short to ground in harness • Faulty charging system
Enable Conditions	• Time after ignition "ON" 〉 0.1sec. • Ignition "ON" & Engine "ON"	
Threshold Value	• Alternator load 〉 35%	
Diagnostic Time	• 1sec.	

SCHEMATIC DIAGRAM E493A3E0

Refer to DTC P0625.

SIGNAL WAVEFORM AND DATA E83DC530

Refer to DTC P0625.

MONITOR DTC STATUS E813E4CA

Refer to DTC P0625.

CONTROL CIRCUIT INSPECTION E35FAA33

1. Ignition "OFF"
2. Disconnect alternator harness connector
3. Measure resistance between terminal 3 of the alternator harness connector and cjassis ground

Specification : Infinite

4. Is resistance within the specification?

YES

▶ Go to next step as below

NO

▶ Repair as necessary and go to "Verification of Vehicle Repair" procedure

TERMINAL AND CONNECTOR INSPECTION E6B46EE7

Refer to DTC P0625.

CHARGING SYSTEM INSPECTION E05EDA9B

1. Check battery condition and Generator output
2. Are battery conditions and Generator output both okay?

YES

▶ Check for poor connection between ECM and component: backed out terminal, improper mating, broken locks or poor terminal to wire connection. Repair as necessary and go to "Verification of Vehicle Repair" procedure

NO

▶ Repair as necessary and go to "Verification of Vehicle Repair" procedure

VERIFICATION OF VEHICLE REPAIR E8E6AC90

Refer to DTC P0625.

DTC P0638 THROTTLE ACTUATOR CONTROL RANGE/PERFORMANCE

COMPONENT LOCATION E1E16E08

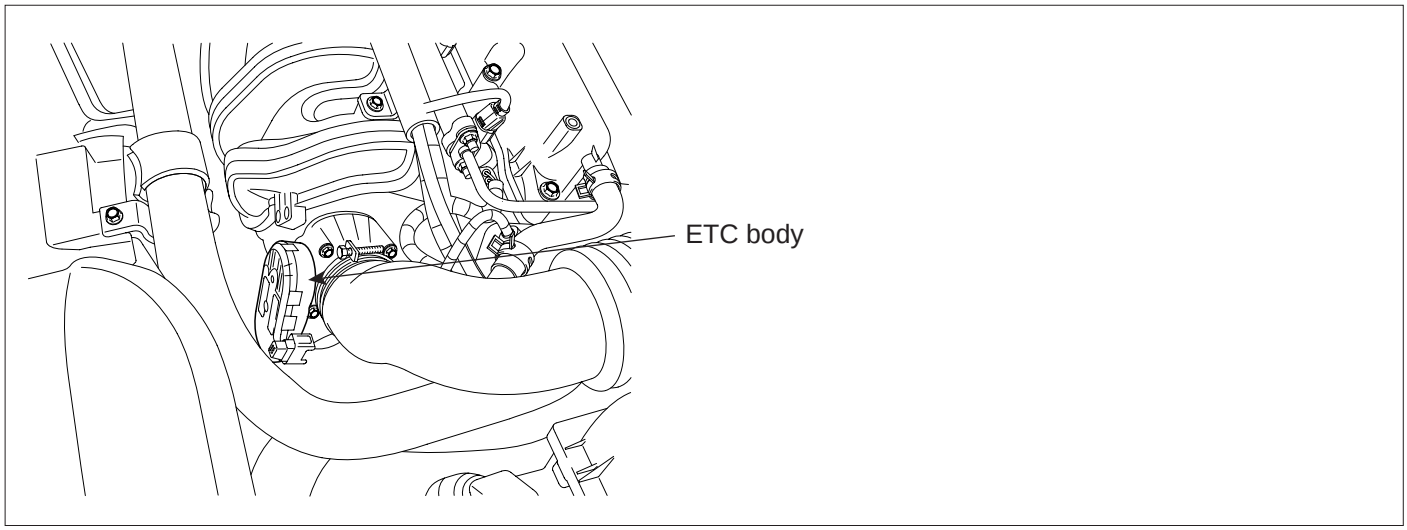

EFRF047C

GENERAL DESCRIPTION E408D84A

The Electronic Throttle Control(ETC) system is made of the components throttle body, throttle position sensor 1 & 2 and accelerator pedal position sensor 1 & 2. The throttle body contains the actuator, the throttle plate and the throttle position sensor (potentiometer), which are integrated in one housing. The actuator consists of a DC engine with a two-stage gear. The throttle position sensor is designed redundantly. In case of an electrical disconnection the throttle plate falls back into an idle default position located above the lower mechanical stop.

DTC DESCRIPTION E4119553

ECM sets DTC P0638 if the ECM detects TPS adaptation value exceeds threshold value

DTC DETECTING CONDITION E4B57B43

Item		Detecting Condition	Possible Cause
DTC Strategy	Case1	• TPS adaptation condition check	• Contact resistance in connectors • Faulty throttle actuator
	Case2	• limphome adaptation voltage range check	
	Case3	• Adaptation of the amplifier check	
	Case4	• Lower mechanical stop adaptation voltage range check	
Enable Conditions		• Ignition "ON" • During TPS adaptation	
Thresh-old Value	Case1	• TPS adaptation is requested with TPS adaptation inhibition condition.	
	Case2	• During adaptation, the voltage values don’t be in the adaptation window within a limit maximum time	
	Case3	• Throttle flap can’t reach the requested position in a defined time limit	
	Case4	• During adaptation, the voltage values don’t be in the adaptation window within a limit maximum time	
Diagnostic Time		• 1.3sec.	

SPECIFICATION E6FFF014

Test Condition	TPS1	TPS2	Motor Resistance
Closed Throttle Status	0.2~0.8V	4.3~4.8V	1.2~1.8Ω
Wide Open Throttle (After starting engine)	4.3~4.8V	0.2~0.8V	

SCHEMATIC DIAGRAM E77DE25C

[Circuit Diagram]

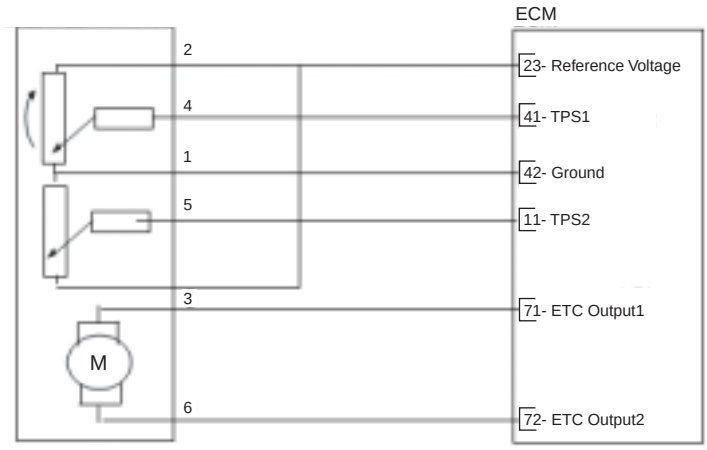

[Connection Information]

Terminal	Connected to	Function
1	ECM Terminal 42	Ground
2	ECM Terminal 23	Reference Voltage
3	ECM Terminal 71	ECT Output1
4	ECM Terminal 41	TPS1
5	ECM Terminal 11	TPS2
6	ECM Terminal 72	ECT Output2

[Harness Connector]

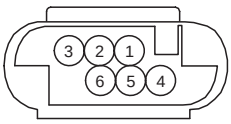

C06

ECM

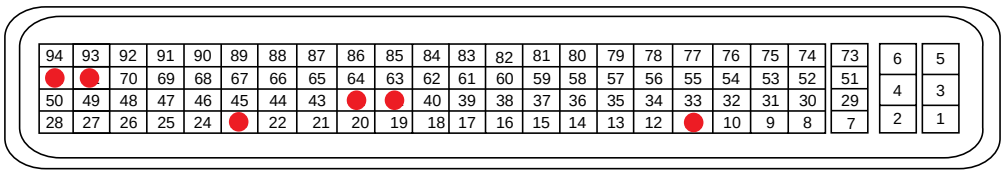

C44

EFRF300W

SIGNAL WAVEFORM AND DATA E37F1A01

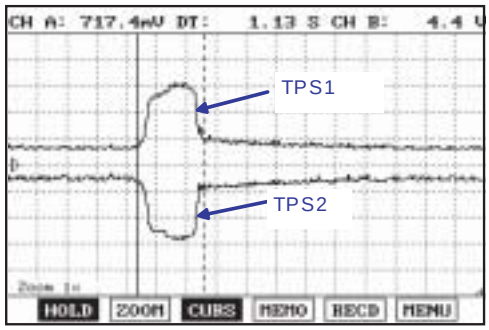

Fig.1

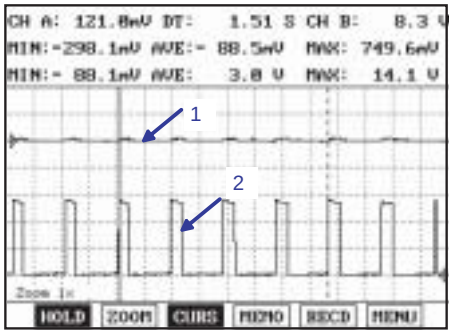

Fig.2

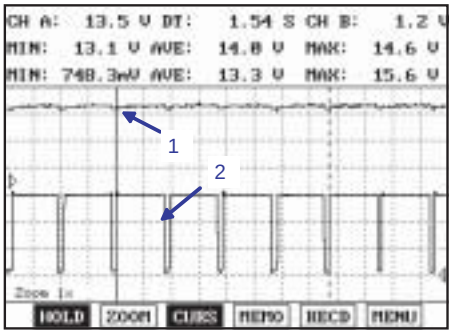

Fig.3

Fig. 1) 1(TPS1) : Output voltage increases smoothly in proportion with the throttle valve opening angle after starting.
2(TPS2) : Output voltage decreases smoothly in inverse proportion with the throttle valve opening angle after starting.

1 : ETC Output 1 2 : ETC Output 2

Fig.2) Normal value with idle, Fig.3) Normal value with acceleration

EFRF400D

MONITOR DTC STATUS E8EC6A21

1. Connect scan tool and select "Diagnostic Trouble Codes(DTCs)" mode

2. Press F4(DTAL) to select DTC information from the DTCs menu

3. Confirm that "DTC Readiness Flag" indicates "Complete". If not, drive the vehicle within conditions noted in the freeze frame data or enable conditions

4. Read "DTC Status" parameter

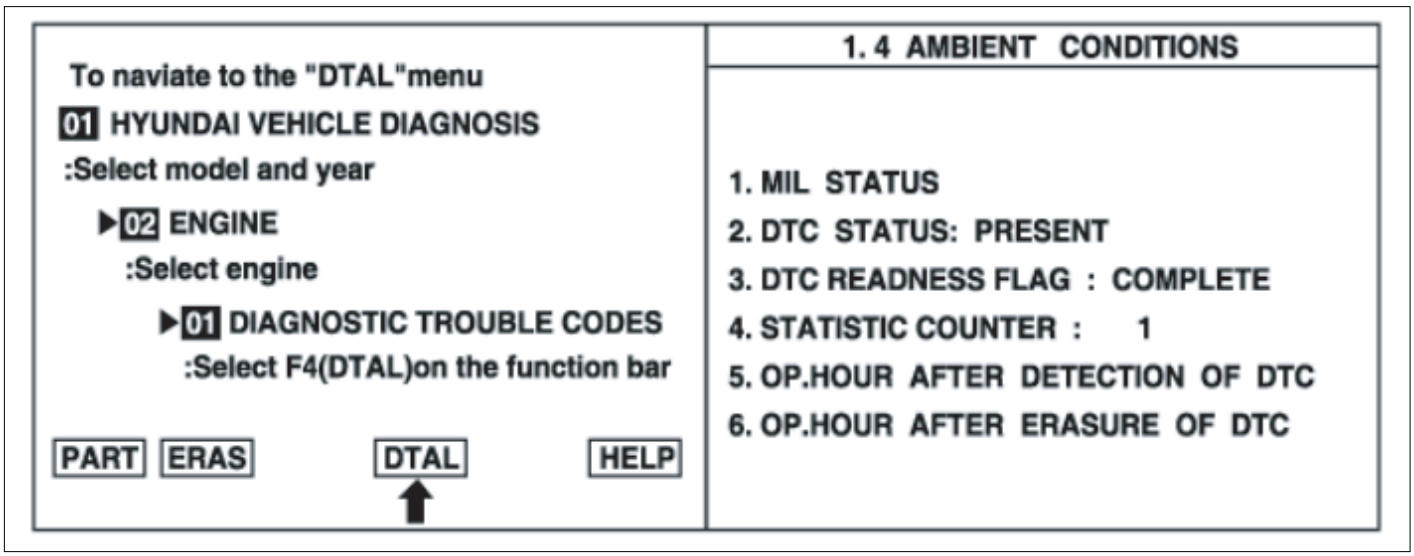

EFRF200D

5. Is parameter displayed "History(Not Present) fault"?

NOTE

- *History (Not Present) fault : DTC occurred but has been cleared*
- *Present fault : DTC is occurring at present time*

YES

▶ Fault is intermittent caused by poor contact in the sensor's and/or the ECM's connector, which was repaired but ECM memory was not cleared. Thoroughly check connectors for looseness, poor connection, bending, corrosion, contamination, deterioration, or damage. Repair or replace as necessary and go to "Verification of Vehicle Repair" procedure

NO

▶ Go to next step as below

COMPONENT INSPECTION EB2EBEF6

1. Resistance Inspection

   1) Ignition "OFF"

   2) Remove throttle body

   3) Visually/physically inspect the restriction or any foreign objects in throttle body

   4) Measure resistance between terminals 3 and 6 of the ETC motor connector(Component side)

Specification : 1.2~1.8Ω at 20℃(68℉)

5) Was a problem found?

YES

▶ Substitute with a known-good throttle body and check for proper operation. If the problem is corrected, replace throttle body and then go to "Verification of Vehicle Repair" procedure.

NOTE

It is necessary to perform the TPS adaptation procedure with Scan tool when the throttle body assembly or ECM is replaced.

1. Erase previous TPS adaptation value using Scan tool.
2. Ignition "OFF" and then "ON" without cranking. Wait for 10 seconds under enable conditions
   - Enable conditions : Battery 〉 10V & Intake Air Temp. 〉 5.3℃(41.5°F) & 5.3℃(41.5°F) 〈 Engine Coolant Temp. 〈 99.8℃(211.6°F)
3. After TPS adaptation, the system normality should be confirmed by reading out "FMY" on the Scan Tool

NO

▶ Go to next step as below

2. Waveform Inspection

1) Start engine and check proper operation of the ETC motor and TPS1 & 2

SPECIFICATION :

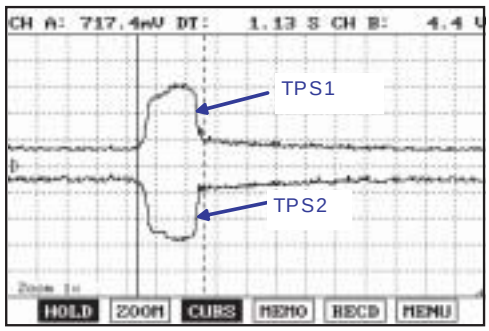

Fig.1

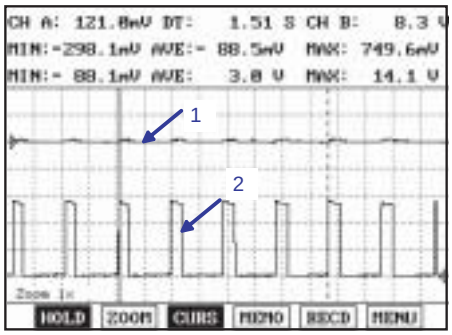

Fig.2

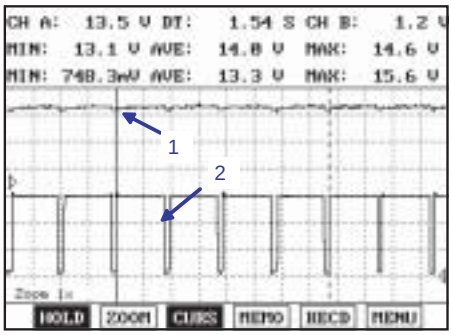

Fig.3

Fig. 1) 1(TPS1) : Output voltage increases smoothly in proportion with the throttle valve opening angle after starting.
2(TPS2) : Output voltage decreases smoothly in inverse proportion with the throttle valve opening angle after starting.
1 : ETC Output 1 2 : ETC Output 2
Fig.2) Normal value with idle, Fig.3) Normal value with acceleration

EFRF400D

2) Has a problem been found?

YES

▶ Repair or replace as necessary and then go to "Verification of Vehicle Repair" procedure.

NO

▶ Go to next step as below

TERMINAL AND CONNECTOR INSPECTION EB168547

1. Many malfunctions in the electrical system are caused by poor harness(es) and terminals. Faults can also be caused by interference from other electrical systems, and mechanical or chemical damage.

2. Thoroughly check connectors for looseness, poor connection, bending, corrosion, contamination, deterioration, or damage.

3. Has a problem been found?

YES

▶ Repair as necessary and go to "Verification of Vehicle Repair" procedure

NO

▶ Check for poor connection between ECM and component: backed out terminal, improper mating, broken locks or poor terminal to wire connection. Repair as necessary and go to "Verification of Vehicle Repair" procedure

VERIFICATION OF VEHICLE REPAIR E8E9067A

After a repair, it is essential to verify that the fault has been corrected.

1. Connect scan tool and select "Diagnostic Trouble Codes(DTCs)" mode

2. Press F4(DTAL) and confirm that "DTC Readiness Flag" indicates "Complete". If not, drive the vehicle within conditions noted in the freeze frame data or enable conditions

3. Read "DTC Status" parameter

4. Is parameter displayed "History(Not Present) fault"?

YES

▶ System performing to specification at this time. Clear the DTC

NO

▶ Go to the applicable troubleshooting procedure.

DTC P0642 SENSOR REFERENCE VOLTAGE "A" CIRCUIT LOW

COMPONENT LOCATION ECBCA5FE

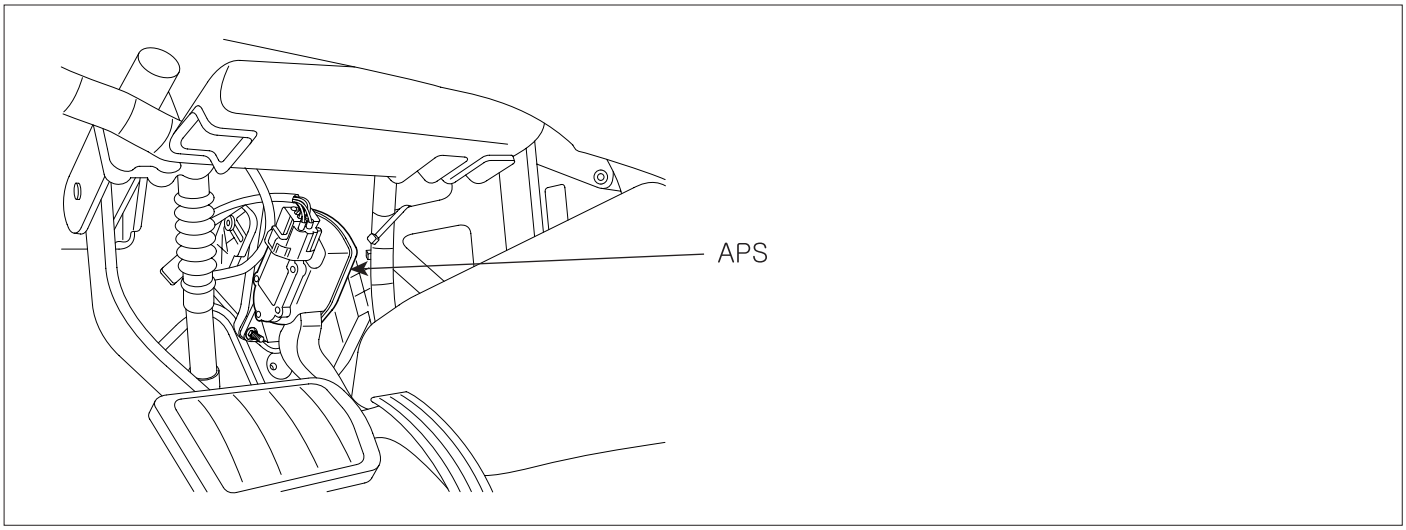

EFRF044A

GENERAL DESCRIPTION E642F166

The ECM provides a 5volt reference voltage to the Acceleration Position Sensor2(APS2), A/C pressure sensor and power steering sensor. The ECM monitors reference voltage deviation from the power supply circuit of the sensors

DTC DESCRIPTION EF1415C4

ECM sets DTC P0642 if the ECM detects reference voltage lower than threshold value

DTC DETECTING CONDITION E78A4C19

Item	Detecting Condition	Possible Cause
DTC Strategy	• Electrical Check	• Open or short to ground in power circuit • Poor connection in connectors • Faulty ECM
Enable Conditions	• Ignition "ON"	
Threshold Value	• Signal voltage 〈 0.7V	
Diagnostic Time	• 0.1sec.	

SCHEMATIC DIAGRAM ED5C8BDF

[Circuit Diagram]

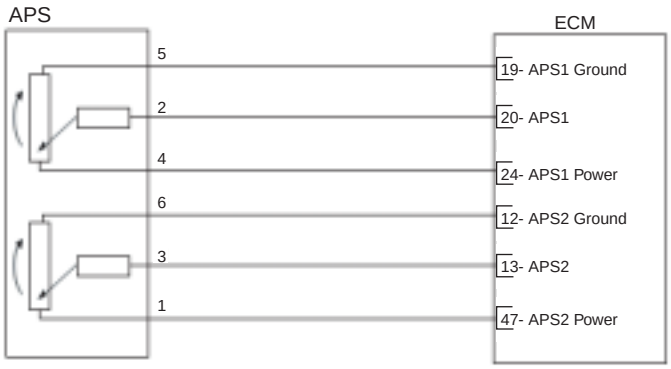

[Connection Information]

Terminal	Connected to	Funtion
1	ECM Terminal 47	APS2 Power
2	ECM Terminal 20	APS1
3	ECM Terminal 13	APS2
4	ECM Terminal 24	APS1 Power
5	ECM Terminal 19	APS1 Ground
6	ECM Terminal 12	APS2 Ground

[Harness Connector]

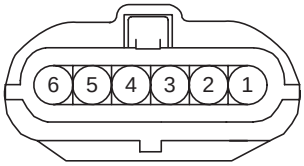

E29

ECM

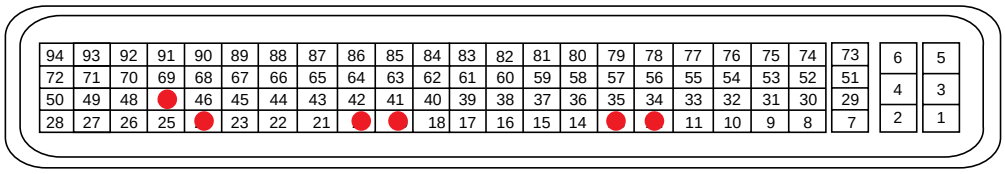

C44

EFRF300F

MONITOR DTC STATUS EBD4D637

1. Connect scan tool and select "Diagnostic Trouble Codes(DTCs)" mode
2. Press F4(DTAL) to select DTC information from the DTCs menu
3. Confirm that "DTC Readiness Flag" indicates "Complete". If not, drive the vehicle within conditions noted in the freeze frame data or enable conditions
4. Read "DTC Status" parameter

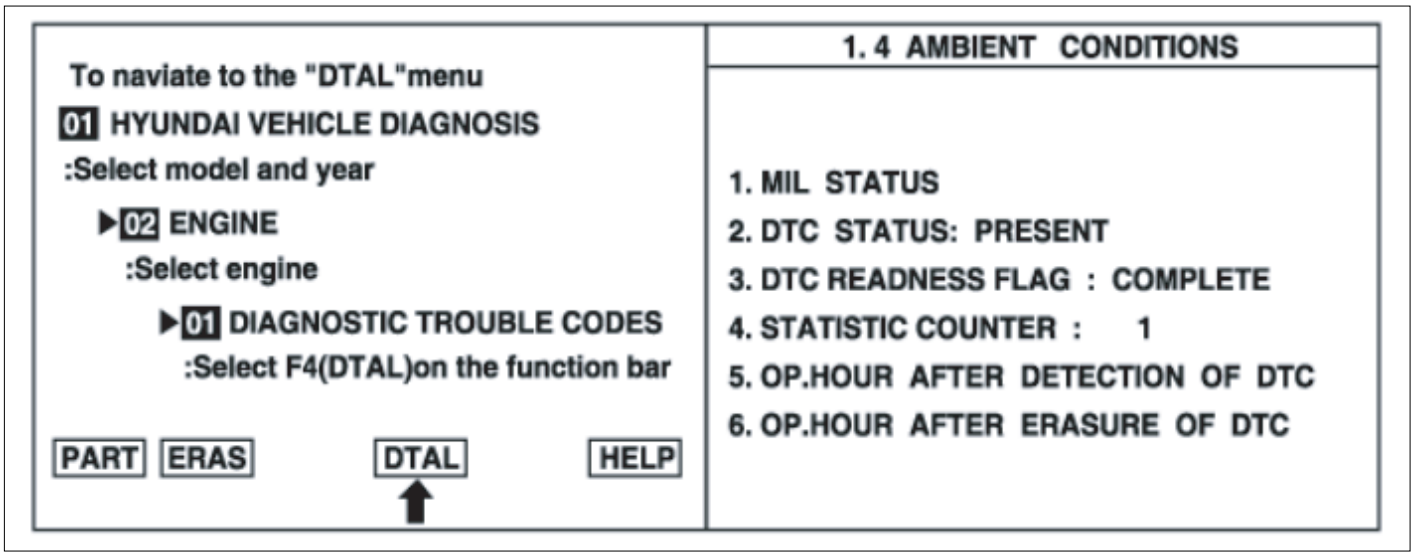

EFRF200D

5. Is parameter displayed "History(Not Present) fault"?

NOTE

- *History (Not Present) fault : DTC occurred but has been cleared*
- *Present fault : DTC is occurring at present time*

YES

▶ Fault is intermittent caused by poor contact in the sensor's and/or the ECM's connector, which was repaired but ECM memory was not cleared. Thoroughly check connectors for looseness, poor connection, bending, corrosion, contamination, deterioration, or damage. Repair or replace as necessary and go to "Verification of Vehicle Repair" procedure

NO

▶ Go to next step as below

POWER CIRCUIT INSPECTION E0F814AF

1. Ignition "OFF"
2. Disconnect APS2 harness connector.
3. Ignition "ON" & Engine "OFF"
4. Measure voltage between terminal 1 of the APS2 harness connector and chassis ground

Specification : Approx. 5V

5. Is voltage within the specification?

YES

▶ Go to next step as below

NO

▶ Repair as necessary and go to "Verification of Vehicle Repair" procedure

TERMINAL AND CONNECTOR INSPECTION E5FE9E03

1. Many malfunctions in the electrical system are caused by poor harness(es) and terminals. Faults can also be caused by interference from other electrical systems, and mechanical or chemical damage.
2. Thoroughly check connectors for looseness, poor connection, bending, corrosion, contamination, deterioration, or damage.
3. Has a problem been found?

YES

▶ Repair as necessary and go to "Verification of Vehicle Repair" procedure

NO

▶ Check for poor connection between ECM and component: backed out terminal, improper mating, broken locks or poor terminal to wire connection. Repair as necessary and go to "Verification of Vehicle Repair" procedure

VERIFICATION OF VEHICLE REPAIR EEF552F3

After a repair, it is essential to verify that the fault has been corrected.

1. Connect scan tool and select "Diagnostic Trouble Codes(DTCs)" mode
2. Press F4(DTAL) and confirm that "DTC Readiness Flag" indicates "Complete". If not, drive the vehicle within conditions noted in the freeze frame data or enable conditions
3. Read "DTC Status" parameter
4. Is parameter displayed "History(Not Present) fault"?

YES

▶ System performing to specification at this time. Clear the DTC

NO

▶ Go to the applicable troubleshooting procedure.

DTC P0643 SENSOR REFERENCE VOLTAGE "A" CIRCUIT HIGH

COMPONENT LOCATION E768A9DC

Refer to DTC P0642.

GENERAL DESCRIPTION E22D08C5

Refer to DTC P0642.

DTC DESCRIPTION E10C8CB0

ECM sets DTC P0643 if the ECM detects reference voltage higher than threshold value

DTC DETECTING CONDITION E65C6354

Item	Detecting Condition	Possible Cause
DTC Strategy	• Electrical Check	• Open or short to battery in power circuit • Poor connection in connectors • Faulty ECM
Enable Conditions	• Ignition "ON"	
Threshold Value	• Signal voltage 〉 5.5V	
Diagnostic Time	• 0.1sec.	

SCHEMATIC DIAGRAM E470963A

Refer to DTC P0642.

MONITOR DTC STATUS EA7EE3AE

Refer to DTC P0642.

POWER CIRCUIT INSPECTION EAA3CB0C

1. Ignition "OFF"
2. Disconnect APS2 harness connector.
3. Ignition "ON" & Engine "OFF"
4. Measure voltage between terminal 1 of the APS2 harness connector and chassis ground

Specification : Approx. 5V

5. Is voltage within the specification?

YES

▶ Go to next step as below

NO

▶ Repair as necessary and go to "Verification of Vehicle Repair" procedure

TERMINAL AND CONNECTOR INSPECTION EA3B3AE7

Refer to DTC P0642.

VERIFICATION OF VEHICLE REPAIR E33B7A70

Refer to DTC P0642.

DTC P0650 MALFUNCTION INDICATOR LAMP(MIL) CONTROL CIRCUIT

COMPONENT LOCATION EBBA6015

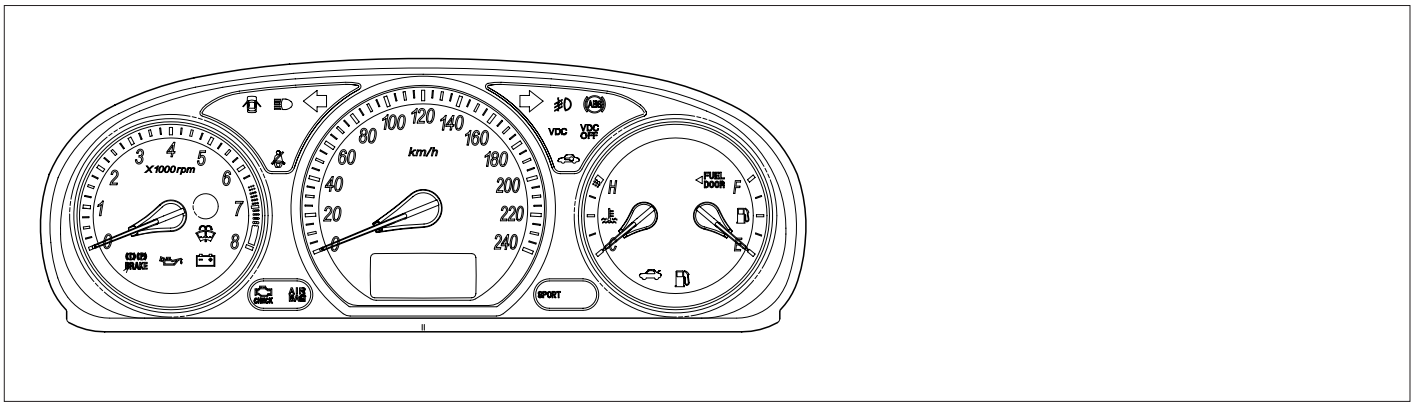

EFRF199A

GENERAL DESCRIPTION E77D6535

The Malfunction Indicator Lamp (MIL), which is located in the instrument cluster, comes on to notify the driver that there may be a problem with the vehicle and that service is needed. Immediately after the ignition switch turns on, the malfunction indicator lamp is lit to indicate that the MIL operates normally and goes off after starting

DTC DESCRIPTION E6ECD45B

ECM sets DTC P0650 if the ECM detects that the MIL control line is open or short circuit to ground or battery line.

DTC DETECTING CONDITION EA19C4F9

Item	Detecting Condition	Possible Cause
DTC Strategy	• Electrical Check	• Open or short between MIL and ECM • Poor connection in connectors • Burned out MIL bulb
Enable Conditions	• Ignition "ON" • 10 〈 Battery voltage 〈16	
Threshold Value	• Open, short to ground or battery	
Diagnostic Time	• 0.1sec.	

SCHEMATIC DIAGRAM E796B142

[Circuit Diagram]

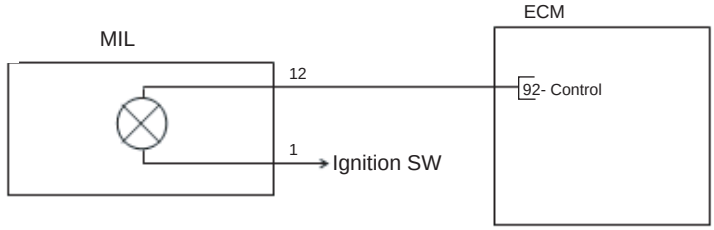

[Connection Information]

Terminal	Connected to	Funtion
12	ECM Terminal 92	MIL Control
1	Ignition SW	Power

[Harness Connector]

ECM

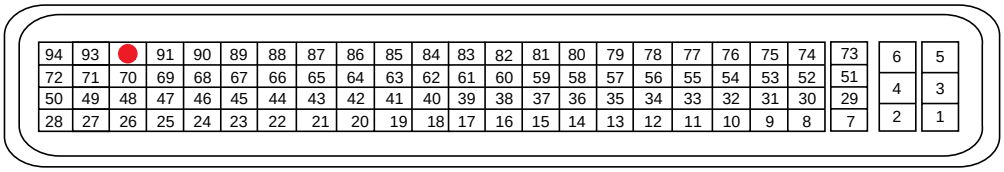

C44

EFRF300R

MONITOR DTC STATUS EE3E07AD

1. Connect scan tool and select "Diagnostic Trouble Codes(DTCs)" mode
2. Press F4(DTAL) to select DTC information from the DTCs menu
3. Confirm that "DTC Readiness Flag" indicates "Complete". If not, drive the vehicle within conditions noted in the freeze frame data or enable conditions
4. Read "DTC Status" parameter

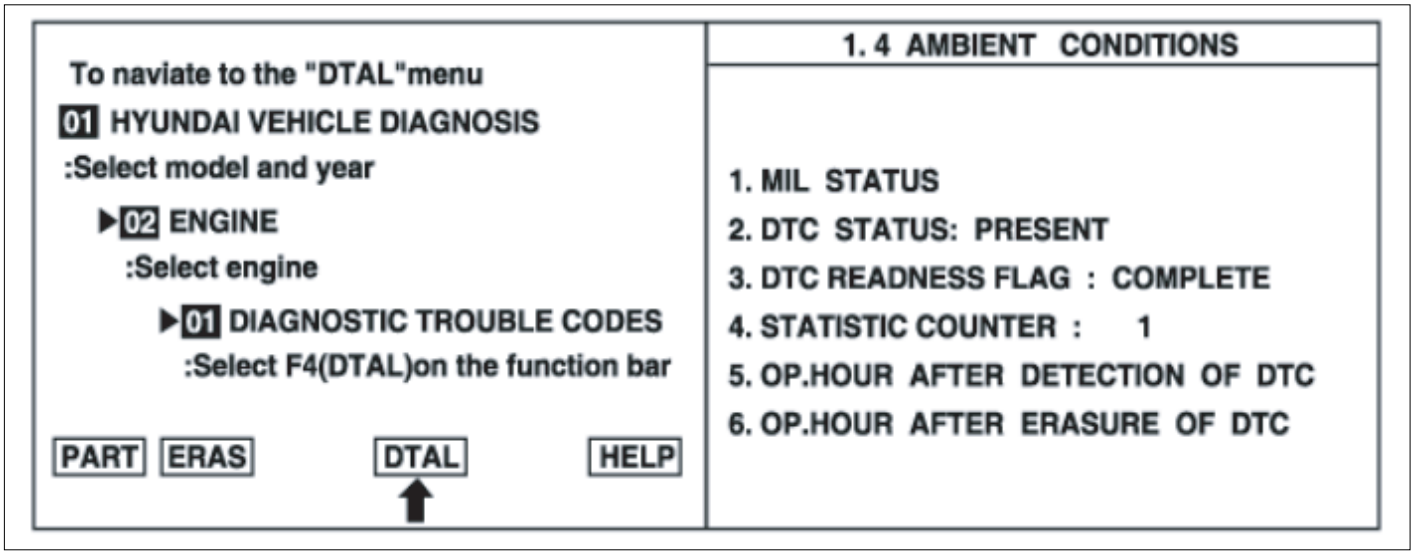

EFRF200D

5. Is parameter displayed "History(Not Present) fault"?

NOTE

- *History (Not Present) fault : DTC occurred but has been cleared*
- *Present fault : DTC is occurring at present time*

YES

▶ Fault is intermittent caused by poor contact in the sensor's and/or the ECM's connector, which was repaired but ECM memory was not cleared. Thoroughly check connectors for looseness, poor connection, bending, corrosion, contamination, deterioration, or damage. Repair or replace as necessary and go to "Verification of Vehicle Repair" procedure

NO

▶ Go to next step as below

CONTROL CIRCUIT INSPECTION E3DEA6E9

1. Ignition "OFF"
2. Disconnect ECM connector
3. Ignition "ON" & Engine "OFF"
4. Using a suitable wire, jumper the terminal 92 of the ECM harness connector to chassis ground.
5. Is MIL bulb illuminated?

YES

▶ Go to next step

NO

▶ Remove instrument cluster and inspect MIL bulb. If it is burned out, replace bulb. If bulb is okay, locate source of open between bulb and Meter Fuse. Repair as necessary and go to "Verification of Vehicle Repair" procedure

6. Remove wire from ECM harness connector
7. Does MIL bulb go out?

YES

▶ Check for poor connection between ECM and component: backed out terminal, improper mating, broken locks or poor terminal to wire connection. Repair as necessary and go to "Verification of Vehicle Repair" procedure

NO

▶ Check for source of short to GND between bulb and ECM. Repair as necessary and go to "Verification of Vehicle Repair" procedure

VERIFICATION OF VEHICLE REPAIR E47ED471

After a repair, it is essential to verify that the fault has been corrected.

1. Connect scan tool and select "Diagnostic Trouble Codes(DTCs)" mode

2. Press F4(DTAL) and confirm that "DTC Readiness Flag" indicates "Complete". If not, drive the vehicle within conditions noted in the freeze frame data or enable conditions

3. Read "DTC Status" parameter

4. Is parameter displayed "History(Not Present) fault"?

YES

▶ System performing to specification at this time. Clear the DTC

NO

▶ Go to the applicable troubleshooting procedure.

DTC P0652 SENSOR REFERENCE VOLTAGE "B" CIRCUIT LOW

COMPONENT LOCATION EDBEFB5C

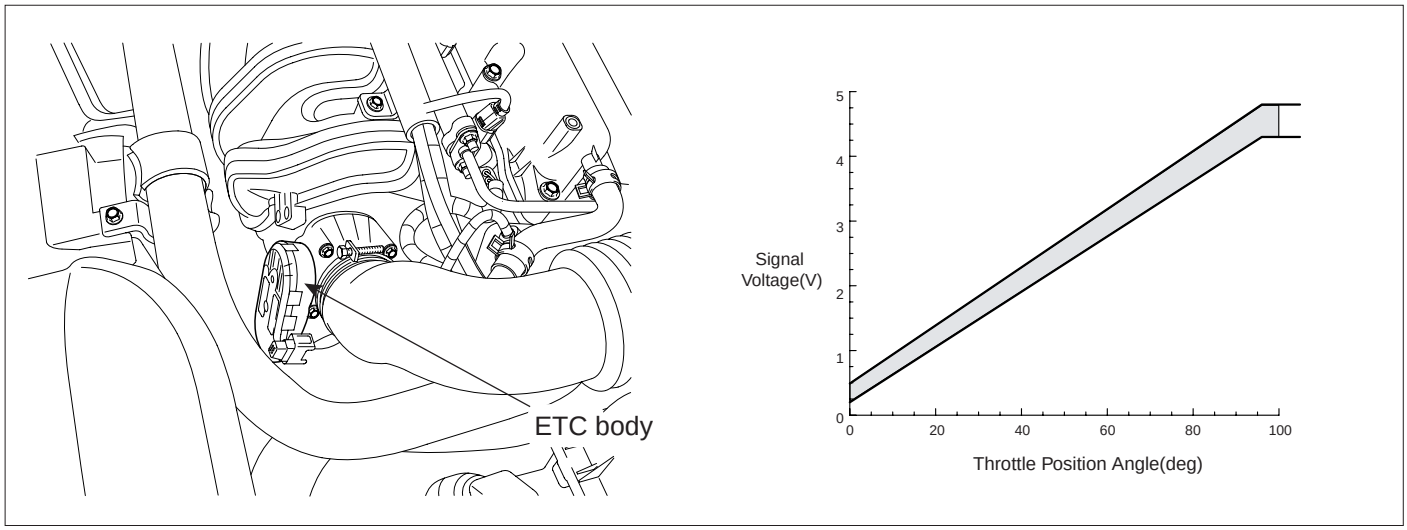

EFRF047A

GENERAL DESCRIPTION EA8D85D3

The ECM provides a 5volt reference voltage to the Throttle Position Sensor(TPS). The ECM monitors reference voltage deviation from the power supply circuit of the TPS

DTC DESCRIPTION E69DA720

ECM sets DTC P0652 if the ECM detects reference voltage lower than threshold value

DTC DETECTING CONDITION EAA06483

Item	Detecting Condition	Possible Cause
DTC Strategy	• Electrical Check	• Open or short to ground in power circuit • Poor connection in connectors • Faulty ECM
Enable Conditions	• Ignition "ON"	
Threshold Value	• Signal voltage 〈 0.7V	
Diagnostic Time	• 1sec.	

SCHEMATIC DIAGRAM EBF713CA

[Circuit Diagram]

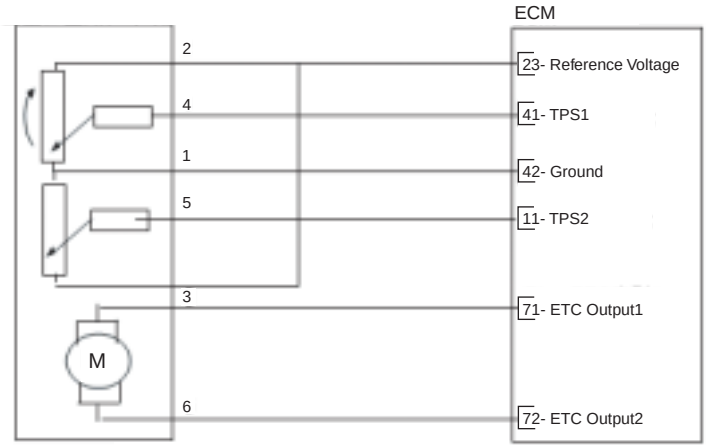

[Connection Information]

Terminal	Connected to	Function
1	ECM Terminal 42	Ground
2	ECM Terminal 23	Reference Voltage
3	ECM Terminal 71	ECT Output1
4	ECM Terminal 41	TPS1
5	ECM Terminal 11	TPS2
6	ECM Terminal 72	ECT Output2

[Harness Connector]

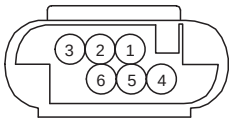

C06

ECM

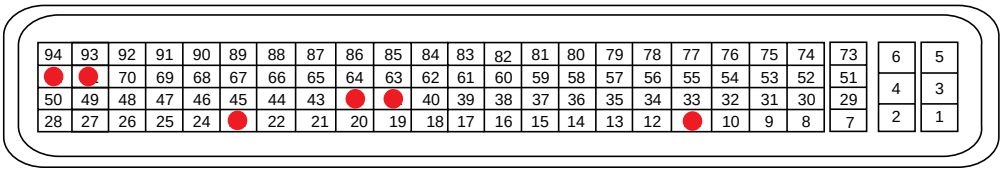

C44

EFRF300W

MONITOR DTC STATUS ED15D90F

1. Connect scan tool and select "Diagnostic Trouble Codes(DTCs)" mode
2. Press F4(DTAL) to select DTC information from the DTCs menu
3. Confirm that "DTC Readiness Flag" indicates "Complete". If not, drive the vehicle within conditions noted in the freeze frame data or enable conditions
4. Read "DTC Status" parameter

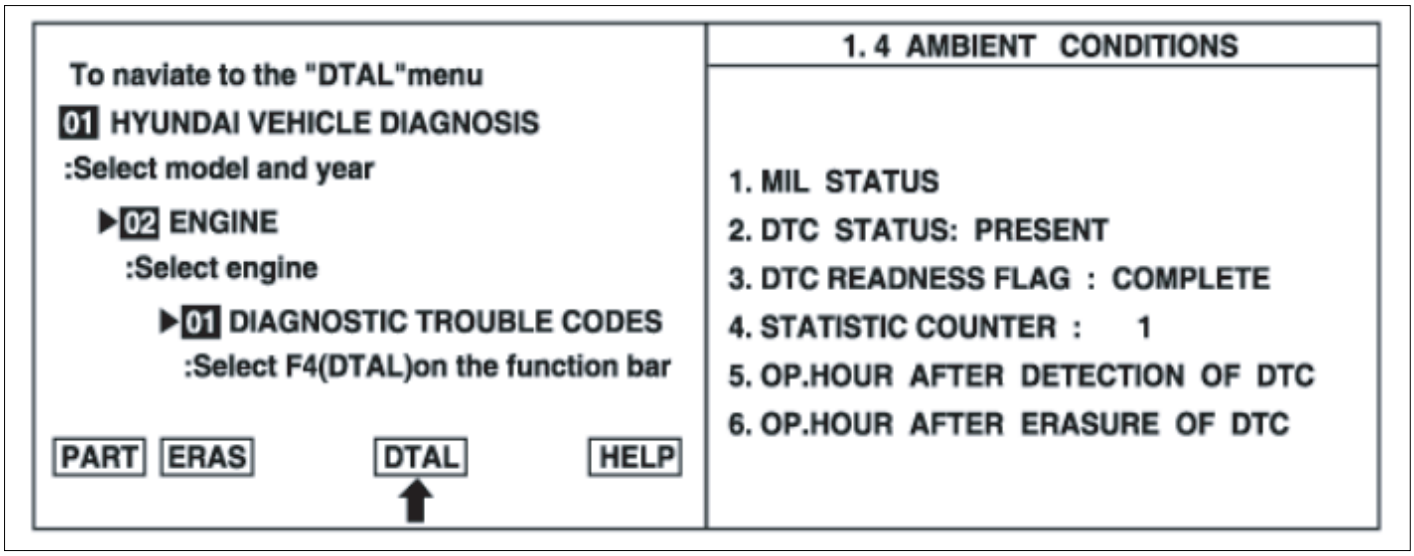

EFRF200D

5. Is parameter displayed "History(Not Present) fault"?

NOTE

- *History (Not Present) fault : DTC occurred but has been cleared*
- *Present fault : DTC is occurring at present time*

YES

▶ Fault is intermittent caused by poor contact in the sensor's and/or the ECM's connector, which was repaired but ECM memory was not cleared. Thoroughly check connectors for looseness, poor connection, bending, corrosion, contamination, deterioration, or damage. Repair or replace as necessary and go to "Verification of Vehicle Repair" procedure

NO

▶ Go to next step as below

POWER CIRCUIT INSPECTION E691E291

1. Ignition "OFF"
2. Disconnect TPS harness connector.
3. Ignition "ON" & Engine "OFF"
4. Measure voltage between terminal 2 of theTPS harness connector and chassis ground

Specification : Approx. 5V

5. Is voltage within the specification?

YES

▶ Go to next step as below

NO

▶ Repair as necessary and go to "Verification of Vehicle Repair" procedure

TERMINAL AND CONNECTOR INSPECTION E304A2DD

1. Many malfunctions in the electrical system are caused by poor harness(es) and terminals. Faults can also be caused by interference from other electrical systems, and mechanical or chemical damage.

2. Thoroughly check connectors for looseness, poor connection, bending, corrosion, contamination, deterioration, or damage.

3. Has a problem been found?

YES

▶ Repair as necessary and go to "Verification of Vehicle Repair" procedure

NO

▶ Check for poor connection between ECM and component: backed out terminal, improper mating, broken locks or poor terminal to wire connection. Repair as necessary and go to "Verification of Vehicle Repair" procedure

VERIFICATION OF VEHICLE REPAIR EC1D7E4D

After a repair, it is essential to verify that the fault has been corrected.

1. Connect scan tool and select "Diagnostic Trouble Codes(DTCs)" mode

2. Press F4(DTAL) and confirm that "DTC Readiness Flag" indicates "Complete". If not, drive the vehicle within conditions noted in the freeze frame data or enable conditions

3. Read "DTC Status" parameter

4. Is parameter displayed "History(Not Present) fault"?

YES

▶ System performing to specification at this time. Clear the DTC

NO

▶ Go to the applicable troubleshooting procedure.

DTC P0653 SENSOR REFERENCE VOLTAGE "B" CIRCUIT HIGH

COMPONENT LOCATION E8CC5ABE

Refer to DTC P0652.

GENERAL DESCRIPTION E1EDD6AC

Refer to DTC P0652.

DTC DESCRIPTION E518D227

ECM sets DTC P0653 if the ECM detects reference voltage higher than threshold value

DTC DETECTING CONDITION E41F8C31

Item	Detecting Condition	Possible Cause
DTC Strategy	• Electrical Check	• Open or short to ground in power circuit • Poor connection in connectors • Faulty ECM
Enable Conditions	• Ignition "ON"	
Threshold Value	• Signal voltage 〉 4.5V	
Diagnostic Time	• 1sec.	

SCHEMATIC DIAGRAM E277F1BA

Refer to DTC P0652.

MONITOR DTC STATUS EE8BFB61

Refer to DTC P0652.

POWER CIRCUIT INSPECTION EA125E5E

1. Ignition "OFF"
2. Disconnect TPS harness connector.
3. Ignition "ON" & Engine "OFF"
4. Measure voltage between terminal 2 of theTPS harness connector and chassis ground

Specification : Approx. 5V

5. Is voltage within the specification?

YES

▶ Go to next step as below

NO

▶ Repair as necessary and go to "Verification of Vehicle Repair" procedure

TERMINAL AND CONNECTOR INSPECTION E229C37E

Refer to DTC P0652.

VERIFICATION OF VEHICLE REPAIR E8908F7A

Refer to DTC P0652.

DTC P0698 SENSOR REFERENCE VOLTAGE "C" CIRCUIT LOW

COMPONENT LOCATION EFD21619

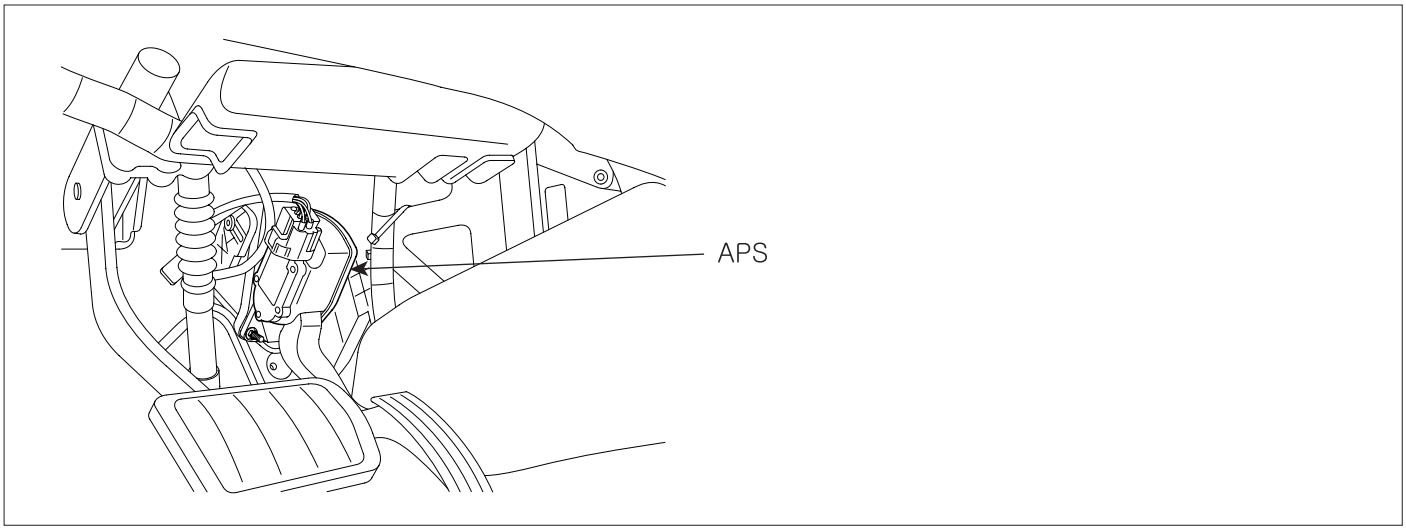

EFRF044A

GENERAL DESCRIPTION ECC912AF

The ECM provides a 5volt reference voltage to the Acceleration Position Sensor1(APS1). The ECM monitors reference voltage deviation from the power supply circuit of the APS1

DTC DESCRIPTION E58683BA

ECM sets DTC P0698 if the ECM detects reference voltage lower than threshold value

DTC DETECTING CONDITION E70109E0

Item	Detecting Condition	Possible Cause
DTC Strategy	• Plausibility check	• Open or short to ground in power circuit • Poor connection in connectors • Faulty ECM
Enable Conditions	• Ignition "ON"	
Threshold Value	• Signal voltage 〈 4.5V	
Diagnostic Time	• 0.1sec.	

SCHEMATIC DIAGRAM EBF3AA58

[Circuit Diagram]

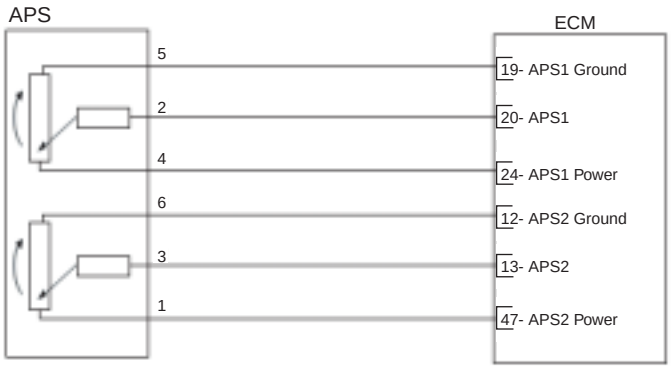

[Connection Information]

Terminal	Connected to	Funtion
1	ECM Terminal 47	APS2 Power
2	ECM Terminal 20	APS1
3	ECM Terminal 13	APS2
4	ECM Terminal 24	APS1 Power
5	ECM Terminal 19	APS1 Ground
6	ECM Terminal 12	APS2 Ground

[Harness Connector]

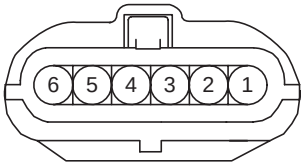

E29

ECM

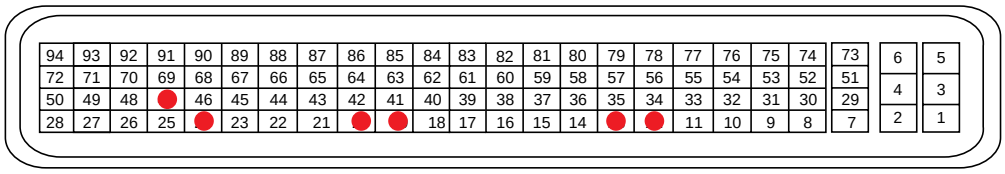

C44

EFRF300F

MONITOR DTC STATUS E3DB4707

1. Connect scan tool and select "Diagnostic Trouble Codes(DTCs)" mode
2. Press F4(DTAL) to select DTC information from the DTCs menu
3. Confirm that "DTC Readiness Flag" indicates "Complete". If not, drive the vehicle within conditions noted in the freeze frame data or enable conditions
4. Read "DTC Status" parameter

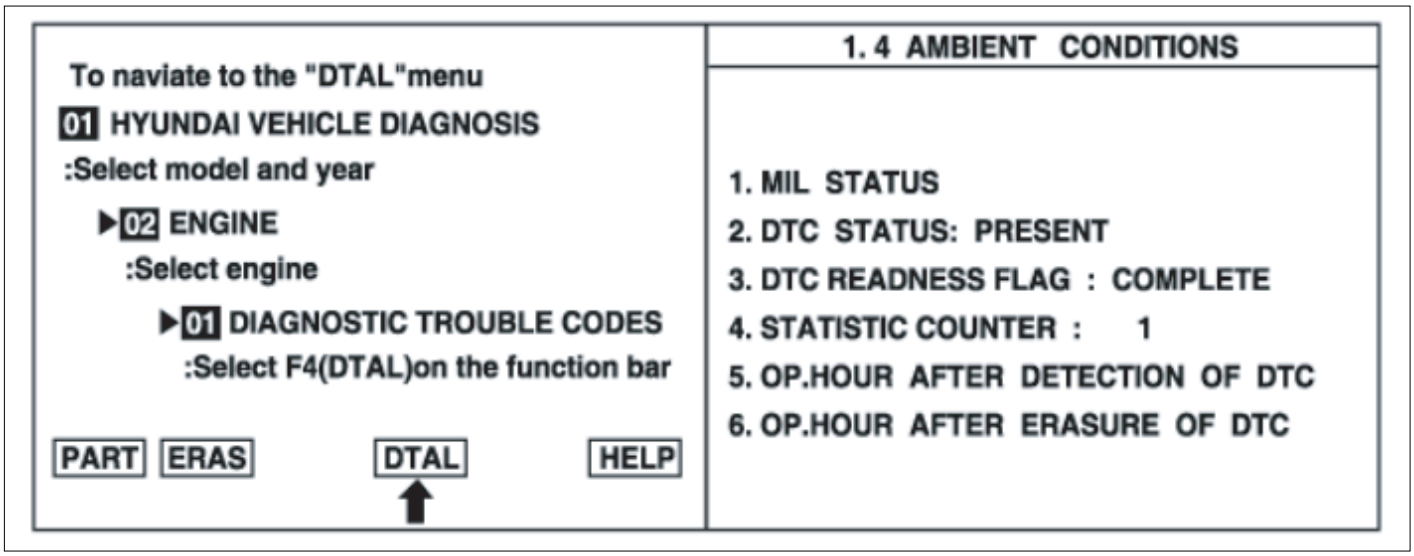

EFRF200D

5. Is parameter displayed "History(Not Present) fault"?

NOTE

- *History (Not Present) fault : DTC occurred but has been cleared*
- *Present fault : DTC is occurring at present time*

YES

▶ Fault is intermittent caused by poor contact in the sensor's and/or the ECM's connector, which was repaired but ECM memory was not cleared. Thoroughly check connectors for looseness, poor connection, bending, corrosion, contamination, deterioration, or damage. Repair or replace as necessary and go to "Verification of Vehicle Repair" procedure

NO

▶ Go to next step as below

POWER CIRCUIT INSPECTION EF84383B

1. Ignition "OFF"

2. Disconnect TPS harness connector.

3. Ignition "ON" & Engine "OFF"

4. Measure voltage between terminal 4 of the APS1 harness connector and chassis ground

Specification : Approx. 5V

<E29>

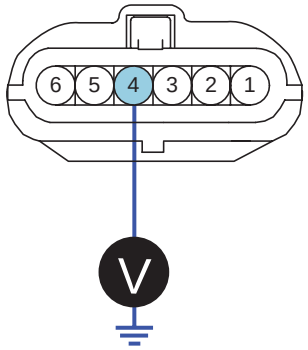

1. APS2 Power
2. APS1
3. APS2
4. **APS1 Power**
5. APS1 Ground
6. APS2 Ground

X6981

5. Is voltage within the specification?

YES

▶ Go to next step as below

NO

▶ Repair as necessary and go to "Verification of Vehicle Repair" procedure

TERMINAL AND CONNECTOR INSPECTION E7AFDA9C

1. Many malfunctions in the electrical system are caused by poor harness(es) and terminals. Faults can also be caused by interference from other electrical systems, and mechanical or chemical damage.
2. Thoroughly check connectors for looseness, poor connection, bending, corrosion, contamination, deterioration, or damage.
3. Has a problem been found?

YES

▶ Repair as necessary and go to "Verification of Vehicle Repair" procedure

NO

▶ Check for poor connection between ECM and component: backed out terminal, improper mating, broken locks or poor terminal to wire connection. Repair as necessary and go to "Verification of Vehicle Repair" procedure

VERIFICATION OF VEHICLE REPAIR E8C9701A

After a repair, it is essential to verify that the fault has been corrected.

1. Connect scan tool and select "Diagnostic Trouble Codes(DTCs)" mode
2. Press F4(DTAL) and confirm that "DTC Readiness Flag" indicates "Complete". If not, drive the vehicle within conditions noted in the freeze frame data or enable conditions
3. Read "DTC Status" parameter
4. Is parameter displayed "History(Not Present) fault"?

YES

▶ System performing to specification at this time. Clear the DTC

NO

▶ Go to the applicable troubleshooting procedure.

DTC P0699 SENSOR REFERENCE VOLTAGE "C" CIRCUIT HIGH

COMPONENT LOCATION EBC5CCD1

Refer to DTC P0698.

GENERAL DESCRIPTION E040B53B

Refer to DTC P0698.

DTC DESCRIPTION E1044181

ECM sets DTC P0699 if the ECM detects reference voltage higher than threshold value

DTC DETECTING CONDITION E1DB3CC6

Item	Detecting Condition	Possible Cause
DTC Strategy	• Plausibility check	• Open or short to ground in power circuit • Poor connection in connectors • Faulty ECM
Enable Conditions	• Ignition "ON"	
Threshold Value	• Signal voltage 〉 5.5V	
Diagnostic Time	• 0.1sec.	

SCHEMATIC DIAGRAM E55B7B28

Refer to DTC P0698.

MONITOR DTC STATUS E025A0A3

Refer to DTC P0698.

POWER CIRCUIT INSPECTION E92CB67A

1. Ignition "OFF"
2. Disconnect TPS harness connector.
3. Ignition "ON" & Engine "OFF"
4. Measure voltage between terminal 4 of the APS1 harness connector and chassis ground

Specification : Approx. 5V

5. Is voltage within the specification?

YES

▶ Go to next step as below

NO

▶ Repair as necessary and go to "Verification of Vehicle Repair" procedure

TERMINAL AND CONNECTOR INSPECTION E5D64301

Refer to DTC P0698.

VERIFICATION OF VEHICLE REPAIR ED534FD2

Refer to DTC P0698.

DTC P0700 TCU REQUEST FOR MIL ON

GENERAL DESCRIPTION E0963916

The TCM can request activation of the MIL lamp Via a communication line to the ECM. This is only a request from TCM to ECM to turn the MIL on. The fault code is stored in the TCM. Select Transaxle system on the Scantool and monitor DTC related automatic transaxle system.
DO ALL REPAIRS associated malfunction with A/T.

DTC DETECTING CONDITION EC87FA22

Item	Detecting Condition	Possible Cause
DTC Strategy	• Freeze frame request via CAN	• Transaxle system
Enable Conditions	• Battery voltage 〉 10V • Engine speed 〉 256 rpm	
Threshold Value	• MIL is requested by TCM	
Diagnostic Time	• Immediate	

MONITOR DTC STATUS E7923305

1. This is only a request from TCM to ECM to turn the MIL on. The fault code is stored in the TCM. The Freeze Frame Data is stored in the ECM under the P0700 request code. Be sure to retrieve freeze frame data before clearing code P0700 from ECM.

2. Check the transaxle system

DTC P2096 POST CATALYST FUEL TRIM SYSTEM TOO LEAN (BANK 1)

GENERAL DESCRIPTION EDCAE4DA

In order to provide the best possible combination of drivability, fuel economy and emission control, the ECM uses a closed loop air/fuel metering system. The ECM monitors the HO2S signal voltage and adjusts fuel delivery based it in closed loop fuel control. Changes in fuel delivery will be indicated by the long-term and the short-term fuel trim values. The ideal fuel trim value is around 0%. The ECM will add fuel when the HO2S signal is indicating a lean condition. Additional fuel is indicated by fuel trim values that are above 0%. The ECM will reduce fuel when the HO2S signal is indicating a rich condition. Reduction in fuel is indicated by fuel trim values that are below 0%. The DTC relevant to fuel trim will be set when the amount reaches excessive levels because of a lean or rich condition.

DTC DESCRIPTION EAE3CCB1

If the lambda controller reaches the maximum or minimum threshold, then feedback control is no longer possible and emissions will be increased. The ECM sets DTC P2096 if no proportional post catalyst fuel trim adaptation occurs for a defined time after the lambda controller has reached its maximum threshold.

DTC DETECTING CONDITION E547ECAE

Item	Detecting Condition	Possible Cause
DTC Strategy	• Monitoring deviation of fuel trim control	• HO2S • TWC
Enable Conditions	• No relevant failure • In closed loop mode	
Threshold Value	• Trim controller value at limit(Lean)	
Diagnostic Time	• 60sec.	

SIGNAL WAVEFORM AND DATA EE6F7CFA

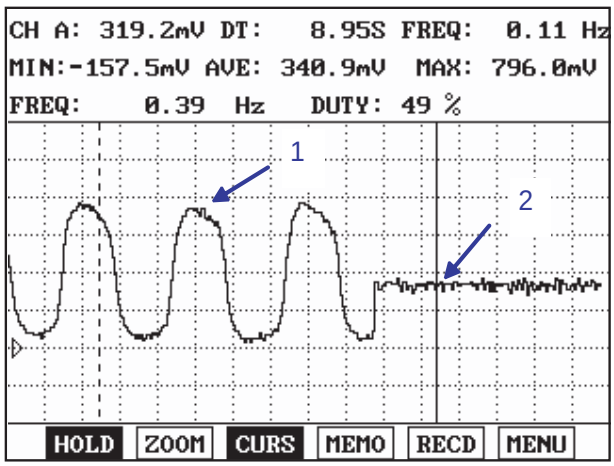

Fig.1

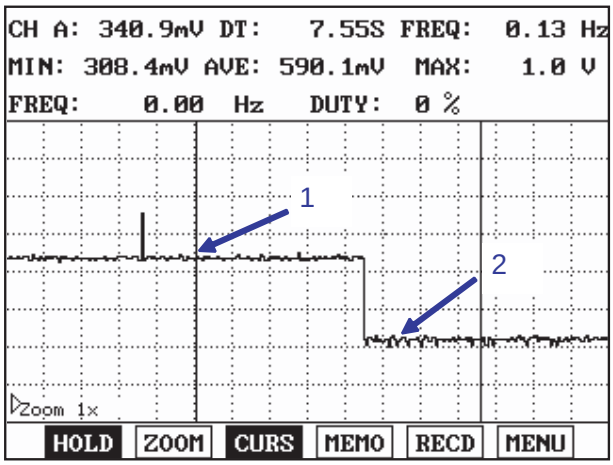

Fig.2

Fig.1) Front HO2S.
1.Normal value with idle after warm up : Signal is switching from rich(above 0.45V) to lean(below 0.45V) a minimum of 3 times in 10 seconds.
2. Open in signal circuit with ignition ON : Approx. 450~500mV
Fig.2) Rear HO2S
1) Normal value with idle after warm up : Approx. above 0.6V
2) Open in signal circuit : Approx. 0.4~0.5V

EFRF201Y

MONITOR DTC STATUS EC23ECFA

NOTE

If any codes relating to injectors, HO2S, ECT(Engine Coolant Temperature)Sensor, Throttle Position sensor, Injectors or Mass Air Flow Sensor are stored, do ALL REPAIRS associated with those codes before proceeding with this troubleshooting tree.

1. Connect scan tool and select "Diagnostic Trouble Codes(DTCs)" mode
2. Press F4(DTAL) to select DTC information from the DTCs menu
3. Confirm that "DTC Readiness Flag" indicates "Complete". If not, drive the vehicle within conditions noted in the freeze frame data or enable conditions
4. Read "DTC Status" parameter

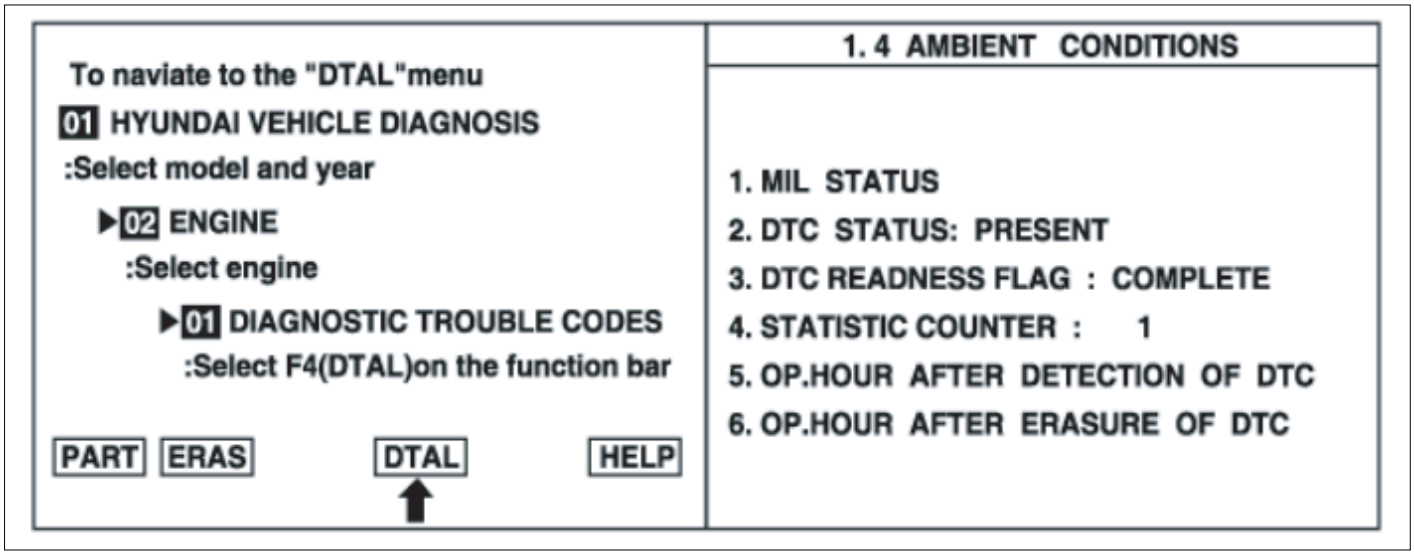

EFRF200D

5. Is parameter displayed "History(Not Present) fault"?

NOTE

- *History (Not Present) fault : DTC occurred but has been cleared.*
- *Present fault : DTC is occurring at present time.*

YES

▶ Fault is intermittent caused by poor contact in the sensor's and/or ECM's connector or was repaired and ECM memory was not cleared. Thoroughly check connectors for loose or poor connection, bending, corrosion, contamination, deterioration, or damage. Repair or replace as necessary and go to "Verification of Vehicle Repair" procedure

NO

▶ Go to next step as below

COMPONENT INSPECTION E145C17E

1. Check for front HO2S
   1) Visually/physically inspect following items:

- Inspect the front HO2S for any silicon contamination. This contamination will be indicated by a white powdery coating and this will result in a but false voltage signal.
- If contamination is evident on the HO2S, replace contaminated sensor and go to next step.

2) Warm up the engine to normal operating temperature and check that HO2S signal is active.

3) Connect Scantool and monitor the Front HO2S parameter on the Scantool data list.

Test Condition : Ignition "ON" & Engine "ON"
Specification : Verify signal is switching from rich(above 0.45V) to lean(below 0.45V) a minimum of 3 times in 10 seconds (voltage will vary between 0.1 and 0.9V).

---

4) Is sensor switching properly?

YES

▶ Go to next step as below

NO

▶ Check front HO2S for contamination, deterioration, or damage. Substitute with a known-good front HO2S and check for proper operation. If the problem is corrected, replace front HO2S and then go to "Verification of Vehicle Repair" procedure

2. Check for rear HO2S

1) Connect Scantool and monitor the Rear HO2S parameter on the Scantool data list.

Specification : Approx. above 0.6V

---

2) Is sensor data near the specified value?

YES

▶ Go to next step as below

NO

▶ Check rear HO2S for contamination, deterioration, or damage. Substitute with a known-good rear HO2S and check for proper operation. If the problem is corrected, replace rear HO2S and then go to "Verification of Vehicle Repair" procedure

3. Check for TWC

1) Visually/physically inspect the three way catalyst converter for the following damage:
- Dent or holes
- Severe discoloration caused by excessive temperatures
- Internal rattle caused by damaged catalyst

2) Also, ensure that the TWC is a proper original equipment manufacturer part

3) Was a problem found?

YES

▶ Substitute with a known-good TWC and check for proper operation. If the problem is corrected, replace TWC and then go to "Verification of Vehicle Repair" procedure

NO

▶ Check for poor connection between ECM and component: backed out terminal, improper mating, broken locks or poor terminal to wire connection. Repair as necessary and go to "Verification of Vehicle Repair" procedure

VERIFICATION OF VEHICLE REPAIR E6E9DA66

After a repair, it is essential to verify that the fault has been corrected.

1. Connect scan tool and select "Diagnostic Trouble Codes(DTCs)" mode
2. Press F4(DTAL) and confirm that "DTC Readiness Flag" indicates "Complete". If not, drive the vehicle within conditions noted in the freeze frame data or enable conditions
3. Read "DTC Status" parameter
4. Is parameter displayed "History(Not Present) fault"?

YES

▶ System performing to specification at this time. Clear the DTC

NO

▶ Go to the applicable troubleshooting procedure.

DTC P2097 POST CATALYST FUEL TRIM SYSTEM TOO RICH (BANK 1)

GENERAL DESCRIPTION E3F001BB

Refer to DTC P2096.

DTC DESCRIPTION EAB46188

If the lambda controller reaches the maximum or minimum threshold, then feedback control is no longer possible and emissions will be increased. The ECM sets DTC P2097 if no proportional post catalyst fuel trim adaptation occurs for a defined time after the lambda controller has reached its minimum threshold.

DTC DETECTING CONDITION E9EFD67A

Item	Detecting Condition	Possible Cause
DTC Strategy	• Monitoring deviation of fuel trim control	• HO2S • TWC
Enable Conditions	• No relevant failure • In closed loop mode	
Threshold Value	• Trim controller value at limit(Rich)	
Diagnostic Time	• 60sec.	

SIGNAL WAVEFORM AND DATA E81B72D0

Refer to DTC P2096.

MONITOR DTC STATUS EE8CA3DC

Refer to DTC P2096.

COMPONENT INSPECTION E79FC26B

Refer to DTC P2096.

VERIFICATION OF VEHICLE REPAIR E1BFB98A

Refer to DTC P2096.

DTC P2101 THROTTLE ACTUATOR CONTROL MOTOR CIRCUIT RANGE/PERFORMANCE

COMPONENT INSPECTION EF6FC24D

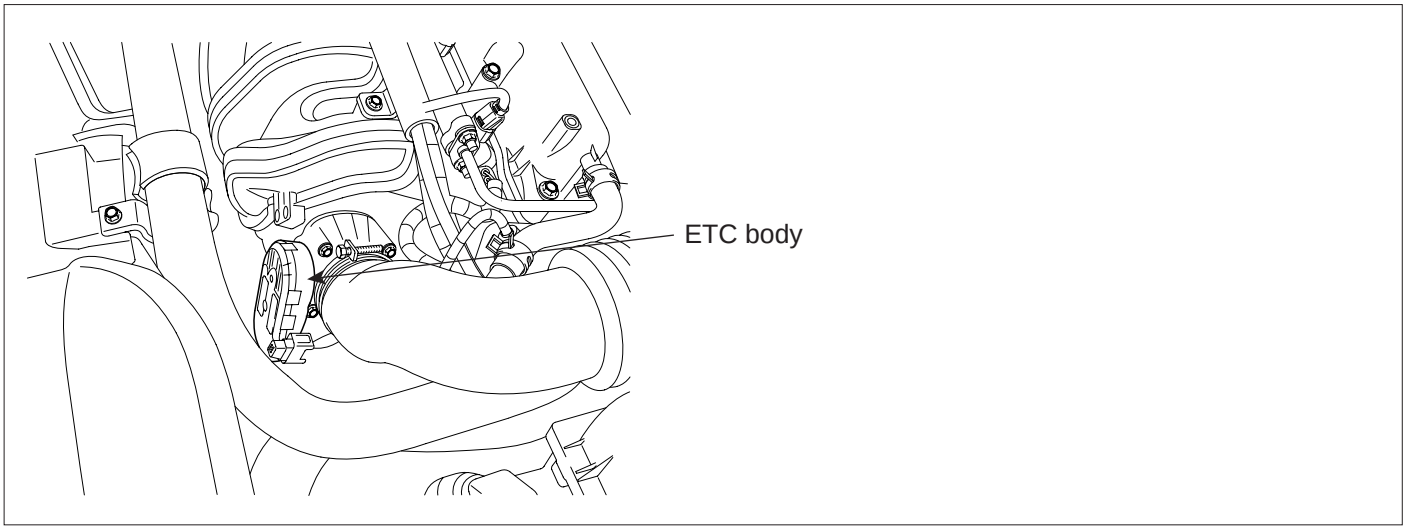

EFRF047C

GENERAL DESCRIPTION ED6FAA55

The Electronic Throttle Control(ETC) system is made of the components throttle body, throttle position sensor 1 & 2 and accelerator pedal position sensor 1 & 2. The throttle body contains the actuator, the throttle plate and the throttle position sensor (potentiometer), which are integrated in one housing. The actuator consists of a DC engine with a two-stage gear. The throttle position sensor is designed redundantly. In case of an electrical disconnection the throttle plate falls back into an idle default position located above the lower mechanical stop.

DTC DESCRIPTION EAC00D77

ECM sets DTC P2101 if the ECM detects motor's electrical signal is abnormal

DTC DETECTING CONDITION EFE1E4CB

Item	Detecting Condition	Possible Cause
DTC Strategy	• Hardware check	• Poor connection in connectors • Faulty ETC motor
Enable Conditions	• Ignition "ON" • Time after start for certain time	
Threshold Value	• ECU power stage error	
Diagnostic Time	• 0.1sec.	

SCHEMATIC DIAGRAM E196685D

[Circuit Diagram]

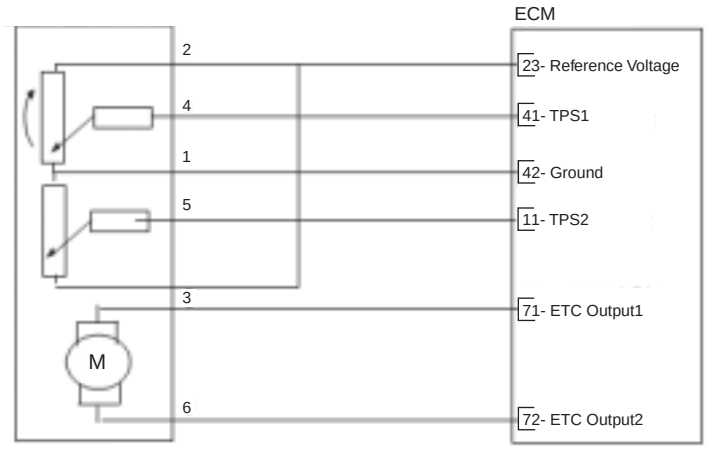

[Connection Information]

Terminal	Connected to	Function
1	ECM Terminal 42	Ground
2	ECM Terminal 23	Reference Voltage
3	ECM Terminal 71	ECT Output1
4	ECM Terminal 41	TPS1
5	ECM Terminal 11	TPS2
6	ECM Terminal 72	ECT Output2

[Harness Connector]

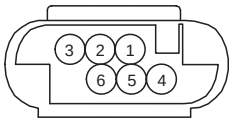

C06

ECM

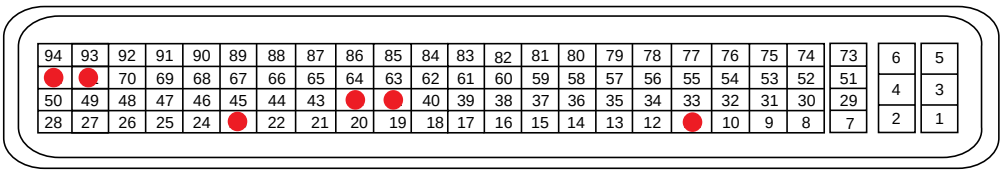

C44

EFRF300W

SIGNAL WAVEFORM AND DATA EE69E68F

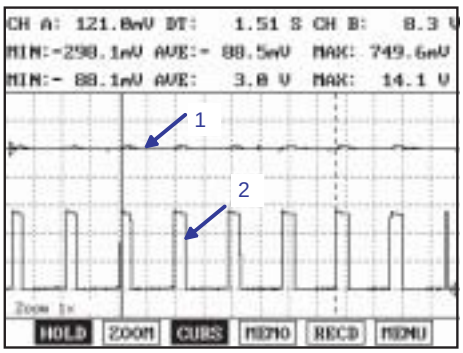

Fig. 1

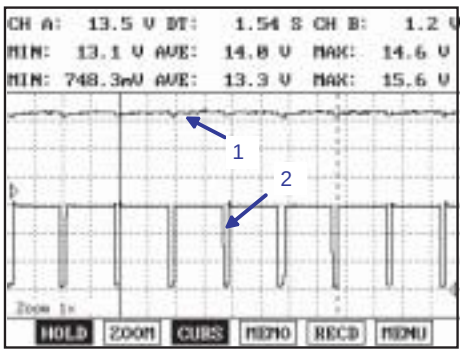

Fig. 2

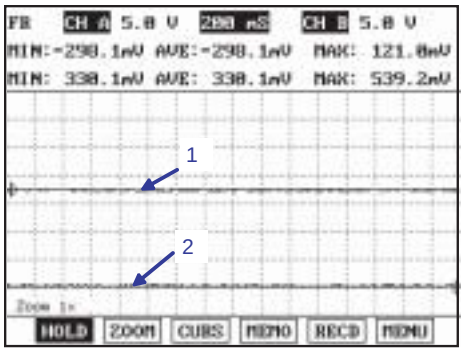

Fig. 3

1:ETC output #1, 2:ETC output #2
Fig. 1) Normal ETC output waveform with idle
Fig. 2) Normal ETC output waveform with acceleration
Fig. 3) Open in ETC control circuit

EFRF400E

MONITOR DTC STATUS EF0A9D84

1. Connect scan tool and select "Diagnostic Trouble Codes(DTCs)" mode

2. Press F4(DTAL) to select DTC information from the DTCs menu

3. Confirm that "DTC Readiness Flag" indicates "Complete". If not, drive the vehicle within conditions noted in the freeze frame data or enable conditions

4. Read "DTC Status" parameter

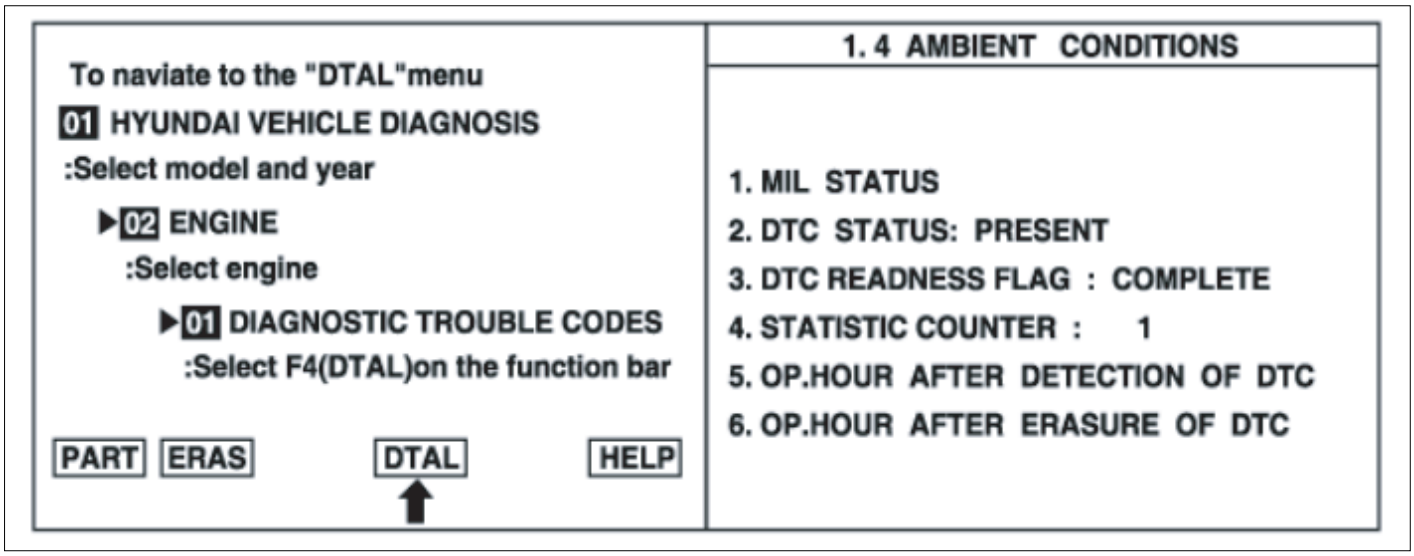

EFRF200D

5. Is parameter displayed "History(Not Present) fault"?

NOTE

- *History (Not Present) fault : DTC occurred but has been cleared.*
- *Present fault : DTC is occurring at present time.*

YES

▶ Fault is intermittent caused by poor contact in the sensor's and/or the ECM's connector, which was repaired but ECM memory was not cleared. Thoroughly check connectors for looseness, poor connection, bending, corrosion, contamination, deterioration, or damage. Repair or replace as necessary and go to "Verification of Vehicle Repair" procedure

NO

▶ Go to next step as below

CONTROL CIRCUIT INSPECTION (ETC OUTPUT1) EF8AEAAF

1. Check for short to ground in control circuit

   1) Ignition "OFF"

   2) Disconnect ETC assembly connector

   3) Measure resistance between terminal 3 of the ETC motor harness connector and chassis ground

Specification : Infinite

   4) Is resistance within the specification?

YES

▶ Go to next step as below

NO

▶ Repair as necessary and go to "Verification of Vehicle Repair" procedure

2. Check for short to battery in control circuit

   1) Disconnect ECM harness connector

   2) Ignition "ON" & Engine "OFF"

   3) Measure voltage between terminal 3 of the ETC motor harness connector and chassis ground

Specification : Approx. 0V

   4) Is voltage within the specification?

YES

▶ Go to next step as below

NO

▶ Repair as necessary and go to "Verification of Vehicle Repair" procedure

3. Check for open in control circuit

   1) Ignition "OFF"

   2) Measure resistance between terminals 3 of the ETC motor harness connector and 71 of the ECM harness connector

Specification : Approx. 0Ω

   3) Is resistance within the specification?

YES

▶ Go to next step as below

NO

▶ Repair as necessary and go to "Verification of Vehicle Repair" procedure

CONTROL CIRCUIT INSPECTION(ETC OUTPUT2)

1. Check for short to ground in control circuit

   1) Measure resistance between terminal 6 of the ETC motor harness connector and chassis ground

Specification : Infinite

2) Is resistance within the specification?

YES

▶ Go to next step as below

NO

▶ Repair as necessary and go to "Verification of Vehicle Repair" procedure

2. Check for short to battery in control circuit

1) Ignition "ON" & Engine "OFF"

2) Measure voltage between terminal 6 of the ETC motor harness connector and chassis ground

Specification : Approx. 0V

3) Is voltage within the specification?

YES

▶ Go to next step as below

NO

▶ Repair as necessary and go to "Verification of Vehicle Repair" procedure

3. Check for open in control circuit

1) Ignition "OFF"

2) Measure resistance between terminals 6 of the ETC motor harness connector and 72 of the ECM harness connector

Specification : Approx. 0Ω

3) Is resistance within the specification?

YES

▶ Go to next step as below

NO

▶ Repair as necessary and go to "Verification of Vehicle Repair" procedure

TERMINAL AND CONNECTOR INSPECTION E4BBEA1E

1. Many malfunctions in the electrical system are caused by poor harness(es) and terminals. Faults can also be caused by interference from other electrical systems, and mechanical or chemical damage.

2. Thoroughly check connectors for looseness, poor connection, bending, corrosion, contamination, deterioration, or damage.

3. Has a problem been found?

YES

▶ Repair as necessary and go to "Verification of Vehicle Repair" procedure

NO

▶ Check for poor connection between ECM and component: backed out terminal, improper mating, broken locks or poor terminal to wire connection. Repair as necessary and go to "Verification of Vehicle Repair" procedure

VERIFICATION OF VEHICLE REPAIR EBF3F38F

After a repair, it is essential to verify that the fault has been corrected.

1. Connect scan tool and select "Diagnostic Trouble Codes(DTCs)" mode
2. Press F4(DTAL) and confirm that "DTC Readiness Flag" indicates "Complete". If not, drive the vehicle within conditions noted in the freeze frame data or enable conditions
3. Read "DTC Status" parameter
4. Is parameter displayed "History(Not Present) fault"?

YES

▶ System performing to specification at this time. Clear the DTC

NO

▶ Go to the applicable troubleshooting procedure.

DTC P2118 THROTTLE ACTUATOR CONTROL MOTOR CURRENT RANGE/PERFORMANCE

COMPONENT INSPECTION EEC0D188

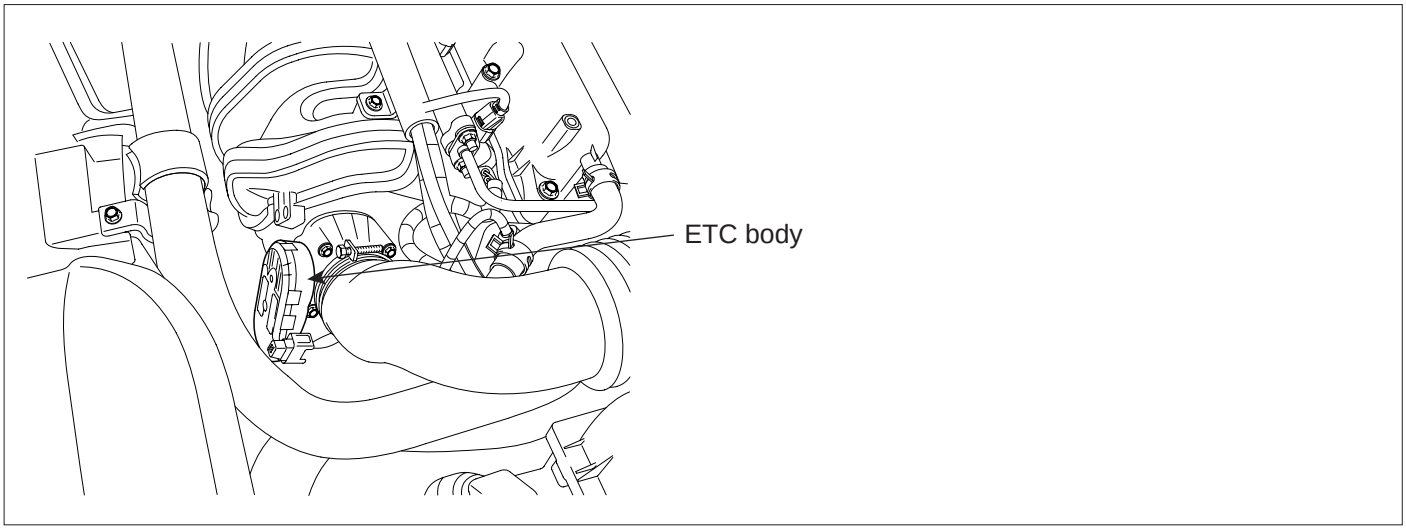

EFRF047C

GENERAL DESCRIPTION EC0320FC

The Electronic Throttle Control(ETC) system is made of the components throttle body, throttle position sensor 1 & 2 and accelerator pedal position sensor 1 & 2. The throttle body contains the actuator, the throttle plate and the throttle position sensor (potentiometer), which are integrated in one housing. The actuator consists of a DC engine with a two-stage gear. The throttle position sensor is designed redundantly. In case of an electrical disconnection the throttle plate falls back into an idle default position located above the lower mechanical stop.

DTC DESCRIPTION E6DB78CC

ECM sets DTC P2118 if the ECM detects motor's PWM signal exceeds threshold value

DTC DETECTING CONDITION EDCA2555

Item		Detecting Condition	Possible Cause
DTC Strategy	Case1	• PWM range check	• Poor connection in connectors • Faulty ETC motor
	Case2	• Small signal deviation check	
	Case3	• Large signal deviation check	
Enable Conditions		• Ignition "ON" • Engine running • Finish TPS adaptation • No relevant error	
Thresh-old Value	Case1	• Moving mean value of the controller output 〉 95%	
	Case2	• Controller deviation exceeds the threshold during certain time(0.4~0.5sec.) at constant TPS setpoint	
Diagnostic Time		• 0.4~0.5sec.	

SCHEMATIC DIAGRAM EB02B36C

[Circuit Diagram]

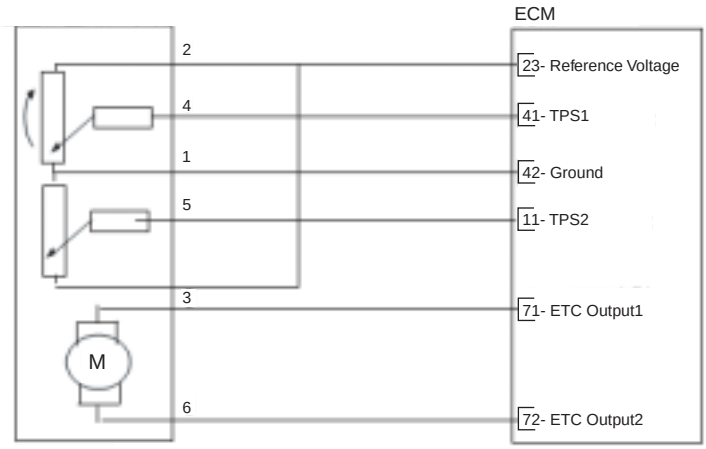

[Connection Information]

Terminal	Connected to	Function
1	ECM Terminal 42	Ground
2	ECM Terminal 23	Reference Voltage
3	ECM Terminal 71	ECT Output1
4	ECM Terminal 41	TPS1
5	ECM Terminal 11	TPS2
6	ECM Terminal 72	ECT Output2

[Harness Connector]

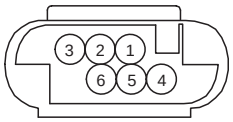

C06

ECM

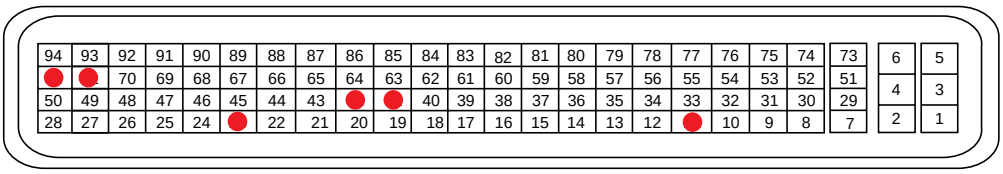

C44

EFRF300W

SIGNAL WAVEFORM AND DATA E14AE6E8

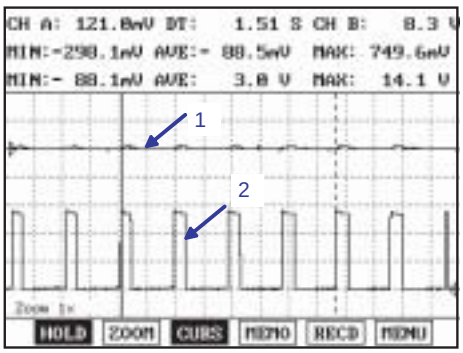

Fig. 1

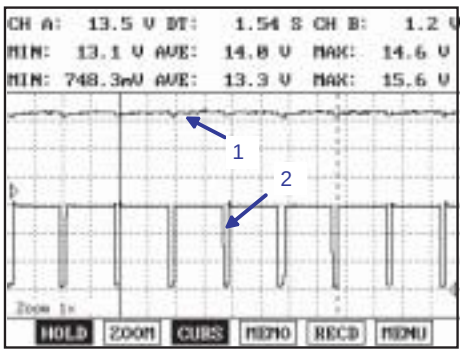

Fig. 2

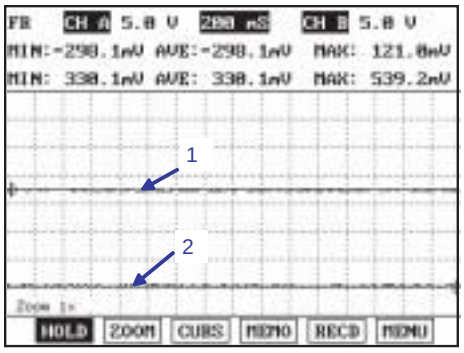

Fig. 3

1:ETC output #1, 2:ETC output #2
Fig. 1) Normal ETC output waveform with idle
Fig. 2) Normal ETC output waveform with acceleration
Fig. 3) Open in ETC control circuit

EFRF400E

MONITOR DTC STATUS E24E2F47

1. Connect scan tool and select "Diagnostic Trouble Codes(DTCs)" mode

2. Press F4(DTAL) to select DTC information from the DTCs menu

3. Confirm that "DTC Readiness Flag" indicates "Complete". If not, drive the vehicle within conditions noted in the freeze frame data or enable conditions

4. Read "DTC Status" parameter

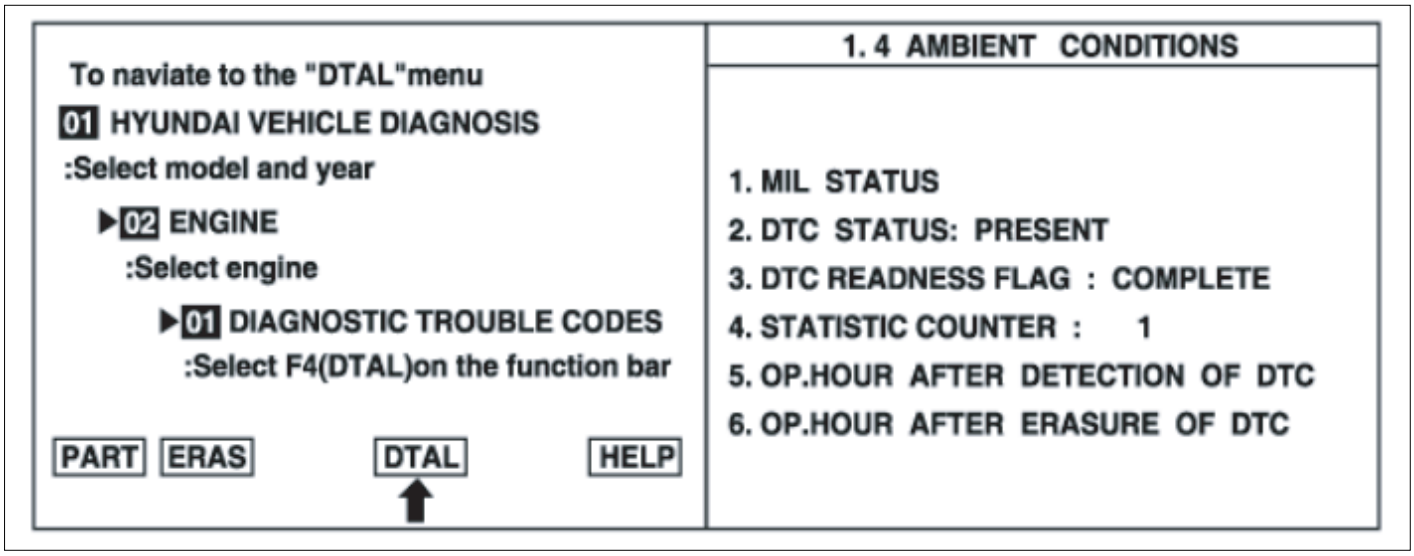

EFRF200D

5. Is parameter displayed "History(Not Present) fault"?

NOTE

- *History (Not Present) fault : DTC occurred but has been cleared.*
- *Present fault : DTC is occurring at present time.*

YES

▶ Fault is intermittent caused by poor contact in the sensor's and/or the ECM's connector, which was repaired but ECM memory was not cleared. Thoroughly check connectors for looseness, poor connection, bending, corrosion, contamination, deterioration, or damage. Repair or replace as necessary and go to "Verification of Vehicle Repair" procedure

NO

▶ Go to next step as below

COMPONENT INSPECTION E3D6C3AA

1. Actuator Test

   1) Ignition "ON"

   2) Install Scan Tool and select "ETC MOTOR" parameter on the Actuation Test mode

   3) Listen for operational sounds of ETC motor(If ETC motor works normally, a clicking sound can be heard)

2. Visual and Resistance Inspection

   1) Ignition "OFF"

   2) Remove throttle body

3) Visually/physically inspect the restriction or any foreign objects in throttle body

4) Measure resistance between terminals 3 and 6 of the ETC motor connector(Component side)

Specification : 1.2~1.8Ω at 20℃(68°F)

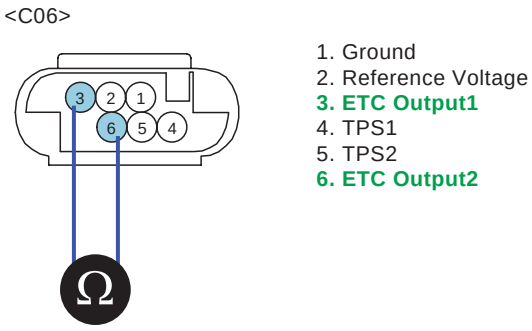

5) Was a problem found?

YES

▶ Substitute with a known-good throttle body and check for proper operation. If the problem is corrected, replace throttle body and then go to "Verification of Vehicle Repair" procedure.

NOTE

It is necessary to perform the TPS adaptation procedure with Scan tool when the throttle body assembly or ECM is replaced.

■ TPS adaptation procedure

1. Erase previous TPS adaptation value using Scan tool.
2. Ignition "OFF" and then "ON" without cranking. Wait for 10 seconds under enable conditions
   - Enable conditions : Battery 〉 10V & Intake Air Temp. 〉 5.3℃(41.5°F) & 5.3℃(41.5°F) 〈 Engine Coolant Temp. 〈 99.8℃(211.6°F)
3. After TPS adaptation, the system normality should be confirmed by reading out "FMY" on the Scan Tool

NO

▶ Go to next step as below

TERMINAL AND CONNECTOR INSPECTION EE5D24FB

1. Many malfunctions in the electrical system are caused by poor harness(es) and terminals. Faults can also be caused by interference from other electrical systems, and mechanical or chemical damage.

2. Thoroughly check connectors for looseness, poor connection, bending, corrosion, contamination, deterioration, or damage.

3. Has a problem been found?

YES

▶ Repair as necessary and go to "Verification of Vehicle Repair" procedure

NO

▶ Check for poor connection between ECM and component: backed out terminal, improper mating, broken locks or poor terminal to wire connection. Repair as necessary and go to "Verification of Vehicle Repair" procedure

VERIFICATION OF VEHICLE REPAIR E16A62CA

After a repair, it is essential to verify that the fault has been corrected.

1. Connect scan tool and select "Diagnostic Trouble Codes(DTCs)" mode
2. Press F4(DTAL) and confirm that "DTC Readiness Flag" indicates "Complete". If not, drive the vehicle within conditions noted in the freeze frame data or enable conditions
3. Read "DTC Status" parameter
4. Is parameter displayed "History(Not Present) fault"?

YES

▶ System performing to specification at this time. Clear the DTC

NO

▶ Go to the applicable troubleshooting procedure.

DTC P2119 THROTTLE ACTUATOR CONTROL THROTTLE BODY RANGE/PERFORMANCE

COMPONENT INSPECTION EEF87BA0

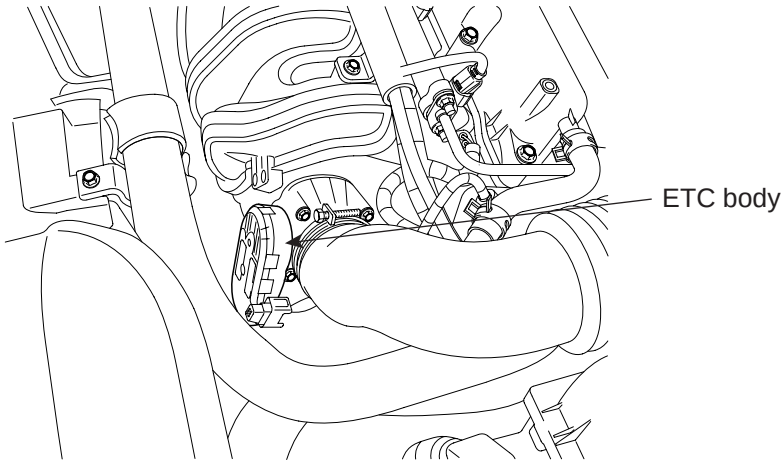

EFRF047C

GENERAL DESCRIPTION EFFB48FC

The Electronic Throttle Control(ETC) system is made of the components throttle body, throttle position sensor 1 & 2 and accelerator pedal position sensor 1 & 2. The throttle body contains the actuator, the throttle plate and the throttle position sensor (potentiometer), which are integrated in one housing. The actuator consists of a DC engine with a two-stage gear. The throttle position sensor is designed redundantly. In case of an electrical disconnection the throttle plate falls back into an idle default position located above the lower mechanical stop.

DTC DESCRIPTION E48F22CE

ECM sets DTC P2119 if the ECM detects TPS adaptation procedure is abnormal

DTC DETECTING CONDITION E4F4ECEE

Item		Detecting Condition	Possible Cause
DTC Strategy		• Plausibility check	• Poor connection in connectors • Faulty ETC motor
Enable Condi-tions	Case1	• Ignition "ON" • During TPS adaptation • TPS set-point adaptation 〉 1.9°	
	Case2,4	• Ignition "ON" • During TPS adaptation	
	Case3	• Ignition "ON" • During TPS adaptation • TPS set-point adaptation 〉 20°	
	Case5	• Ignition "ON" • During TPS adaptation • TPS set-point adaptation 〉 15°	
	Case6	• Ignition "ON" • During TPS adaptation • No engine start condition • No injection because TPS adaptation is not finished.	
Thresh-old Value	Case1	• Throttle position for the lower return spring check is not reached within a limit maximum time	
	Case2	• When ETC power stage is off, Throttle can’t return by spring power in the limp-home position within a limit maximum time	
	Case3	• Throttle flap can’t reach the requested position in a defined time limit	
	Case4	• When ETC power stage is off, Throttle can’t return by spring power in the limp-home position within a limit maximum time	
	Case5	• Throttle flap can’t reach the setpoint within the hysteresis within a limit maximum time	
	Case6	• When ETC power stage is off, Throttle can’t return by spring power in the limp-home position within a limit maximum time	
Diagnostic Time		• 1.3sec.	

SPECIFICATION E06C0FBD

Test Condition	TPS1	TPS2	Motor Resistance
Closed Throttle Status	0.2~0.8V	4.3~4.8V	1.2~1.8Ω
Wide Open Throttle(After starting engine)	4.3~4.8V	0.2~0.8V	

SCHEMATIC DIAGRAM EDD89512

[Circuit Diagram]

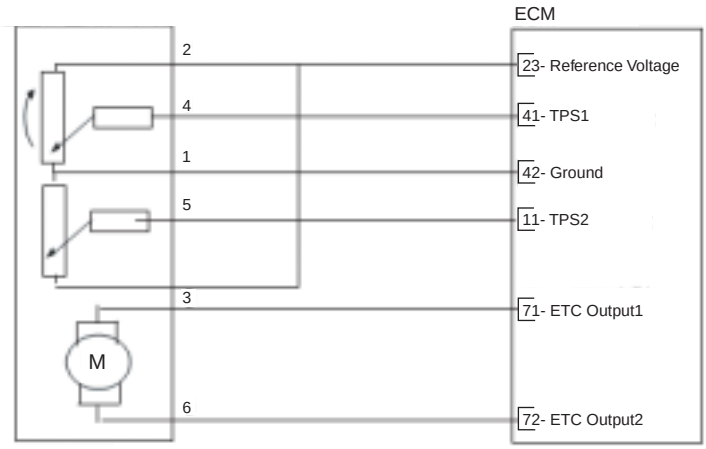

[Connection Information]

Terminal	Connected to	Function
1	ECM Terminal 42	Ground
2	ECM Terminal 23	Reference Voltage
3	ECM Terminal 71	ECT Output1
4	ECM Terminal 41	TPS1
5	ECM Terminal 11	TPS2
6	ECM Terminal 72	ECT Output2

[Harness Connector]

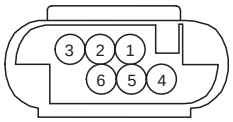

C06

ECM

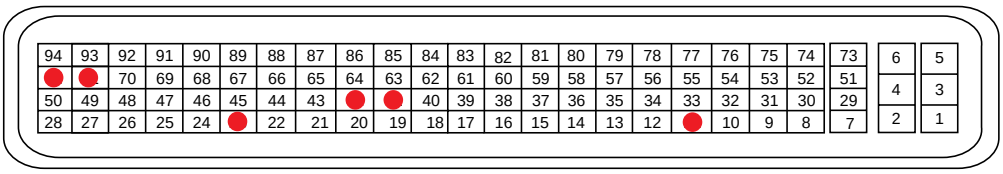

C44

EFRF300W

SIGNAL WAVEFORM AND DATA E8075C46

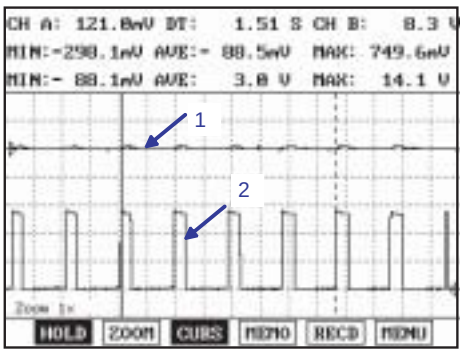

Fig. 1

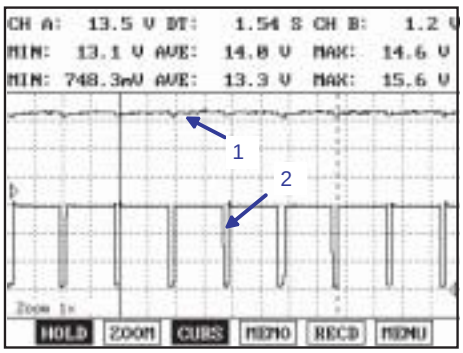

Fig. 2

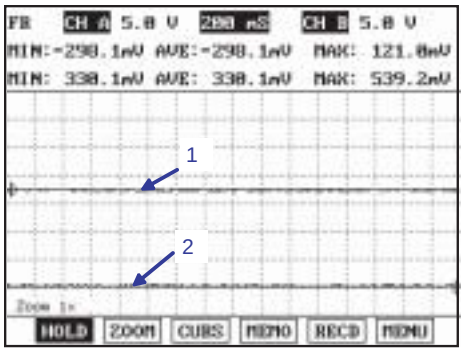

Fig. 3

1:ETC output #1, 2:ETC output #2
Fig. 1) Normal ETC output waveform with idle
Fig. 2) Normal ETC output waveform with acceleration
Fig. 3) Open in ETC control circuit

EFRF400E

MONITOR DTC STATUS E6A62750

1. Connect scan tool and select "Diagnostic Trouble Codes(DTCs)" mode

2. Press F4(DTAL) to select DTC information from the DTCs menu

3. Confirm that "DTC Readiness Flag" indicates "Complete". If not, drive the vehicle within conditions noted in the freeze frame data or enable conditions

4. Read "DTC Status" parameter

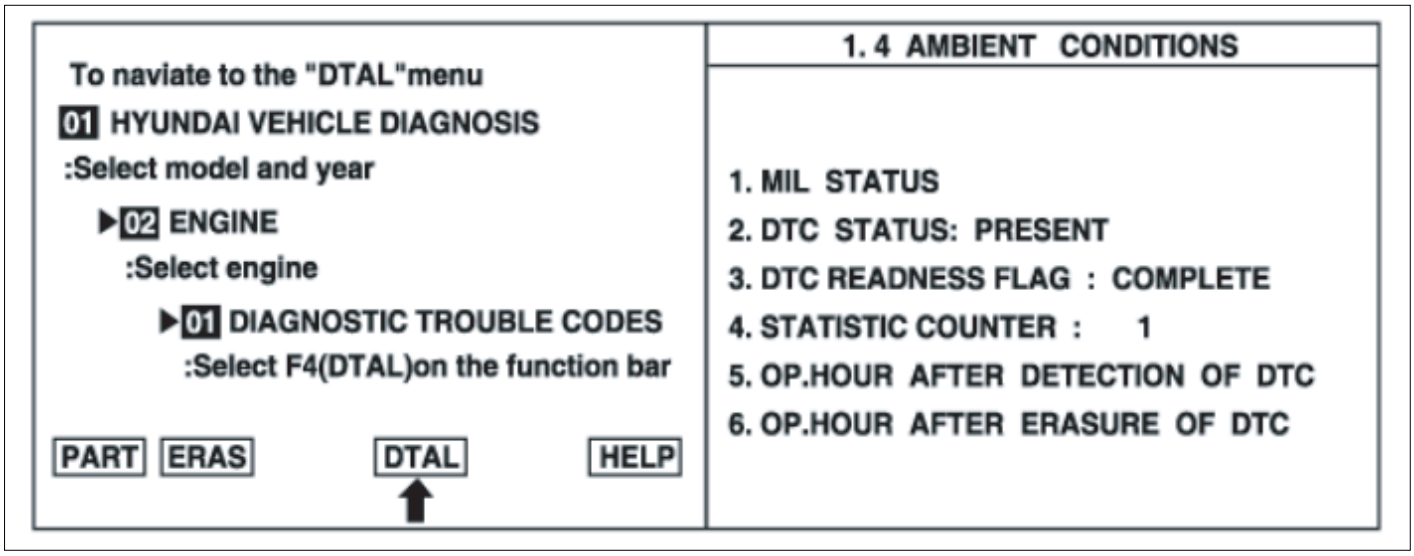

EFRF200D

5. Is parameter displayed "History(Not Present) fault"?

NOTE

- *History (Not Present) fault : DTC occurred but has been cleared.*
- *Present fault : DTC is occurring at present time.*

YES

▶ Fault is intermittent caused by poor contact in the sensor's and/or the ECM's connector, which was repaired but ECM memory was not cleared. Thoroughly check connectors for looseness, poor connection, bending, corrosion, contamination, deterioration, or damage. Repair or replace as necessary and go to "Verification of Vehicle Repair" procedure

NO

▶ Go to next step as below

COMPONENT INSPECTION EBAE149D

1. Actuator Test

   1) Ignition "ON"

   2) Install Scan Tool and select "ETC MOTOR" parameter on the Actuation Test mode

   3) Listen for operational sounds of ETC motor(If ETC motor works normally, a clicking sound can be heard)

2. Visual and Resistance Inspection

   1) Ignition "OFF"

   2) Remove throttle body

3) Visually/physically inspect the restriction or any foreign objects in throttle body

4) Measure resistance between terminals 3 and 6 of the ETC motor connector(Component side)

Specification : 1.2~1.8Ω at 20℃(68°F)

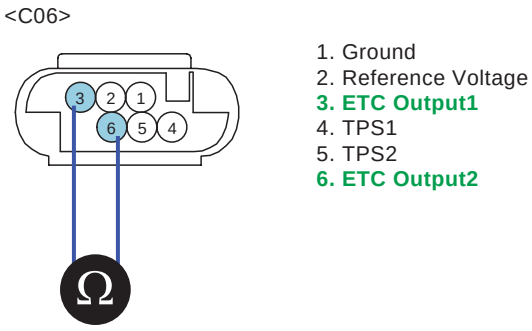

X7007

5) Was a problem found?

YES

▶ Substitute with a known-good throttle body and check for proper operation. If the problem is corrected, replace throttle body and then go to "Verification of Vehicle Repair" procedure.

NOTE

It is necessary to perform the TPS adaptation procedure with Scan tool when the throttle body assembly or ECM is replaced.

■ TPS adaptation procedure

1. Erase previous TPS adaptation value using Scan tool.
2. Ignition "OFF" and then "ON" without cranking. Wait for 10 seconds under enable conditions
   - Enable conditions : Battery 〉 10V & Intake Air Temp. 〉 5.3℃(41.5°F) & 5.3℃(41.5°F) 〈 Engine Coolant Temp. 〈 99.8℃(211.6°F)
3. After TPS adaptation, the system normality should be confirmed by reading out "FMY" on the Scan Tool

NO

▶ Go to next step as below

TERMINAL AND CONNECTOR INSPECTION E839E3CF

1. Many malfunctions in the electrical system are caused by poor harness(es) and terminals. Faults can also be caused by interference from other electrical systems, and mechanical or chemical damage.

2. Thoroughly check connectors for looseness, poor connection, bending, corrosion, contamination, deterioration, or damage.

3. Has a problem been found?

YES

▶ Repair as necessary and go to "Verification of Vehicle Repair" procedure

NO

▶ Check for poor connection between ECM and component: backed out terminal, improper mating, broken locks or poor terminal to wire connection. Repair as necessary and go to "Verification of Vehicle Repair" procedure

VERIFICATION OF VEHICLE REPAIR E087F88E

After a repair, it is essential to verify that the fault has been corrected.

1. Connect scan tool and select "Diagnostic Trouble Codes(DTCs)" mode
2. Press F4(DTAL) and confirm that "DTC Readiness Flag" indicates "Complete". If not, drive the vehicle within conditions noted in the freeze frame data or enable conditions
3. Read "DTC Status" parameter
4. Is parameter displayed "History(Not Present) fault"?

YES

▶ System performing to specification at this time. Clear the DTC

NO

▶ Go to the applicable troubleshooting procedure.

DTC P2122 THROTTLE/PEDAL POSITION SENSOR/SWITCH "D" CIRCUIT LOW INPUT

COMPONENT LOCATION ECD299BD

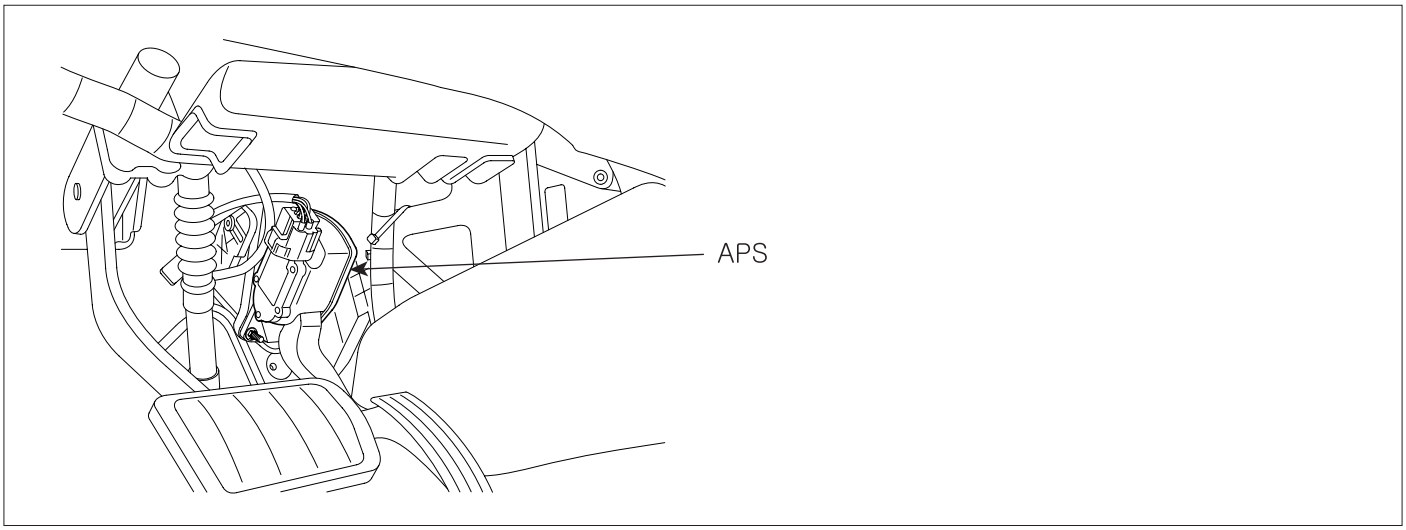

EFRF044A

GENERAL DESCRIPTION E6DE83FD

The Electronic Throttle Control(ETC) system is made of the components throttle body, throttle position sensor 1 & 2 and accelerator pedal sensor1 & 2. The Accelerator Pedal Sensor(APS) has two potentiometers whose slides are mechanically solid. A voltage is generated across the potentiometer in the accelerator pedal sensor as a function of the accelerator-pedal setting. Using a programmed characteristic curve, the pedal' s position is then calculated from voltage. ECM receives APS's signal and other input values, it calculates throttle valve target opening value and then controls ETS motor to meet the throttle valve target opening value.

DTC DESCRIPTION EAEFCA25

ECM sets DTC P2122 if the ECM detects output voltage lower than the possible range of a properly operating APS1

DTC DETECTING CONDITION EEAECBF0

Item	Detecting Condition	Possible Cause
DTC Strategy	• Electrical Check	• Open in power or signal circuit • Short to ground in signal circuit • Poor connection in connectors • APS1
Enable Conditions	• Ignition "ON" • No error for supply voltage of APS1 • APS2 〉 0.5V	
Threshold Value	• Sensor voltage 〈 0.28V	
Diagnostic Time	• -	

SPECIFICATION E474FBC2

Test Condition	APS1	APS2
Closed Throttle Status	Approx. 0.58~0.93V	Approx. 0.29~0.36
Wide Open Throttle	Approx. 3.85~4.35V	Approx. 1.93~2.18V

SCHEMATIC DIAGRAM EDB73609

[Circuit Diagram]

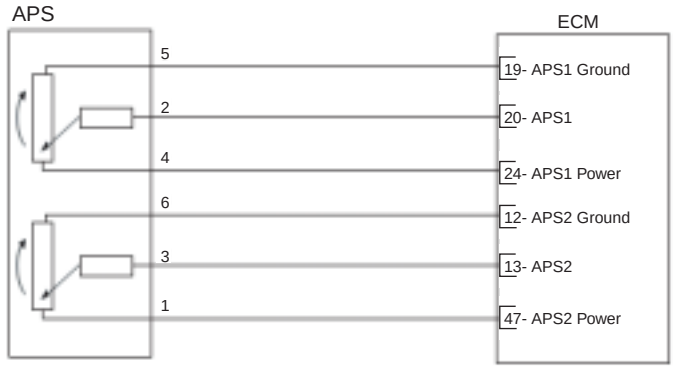

[Connection Information]

Terminal	Connected to	Funtion
1	ECM Terminal 47	APS2 Power
2	ECM Terminal 20	APS1
3	ECM Terminal 13	APS2
4	ECM Terminal 24	APS1 Power
5	ECM Terminal 19	APS1 Ground
6	ECM Terminal 12	APS2 Ground

[Harness Connector]

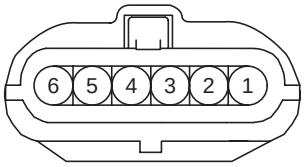

E29

ECM

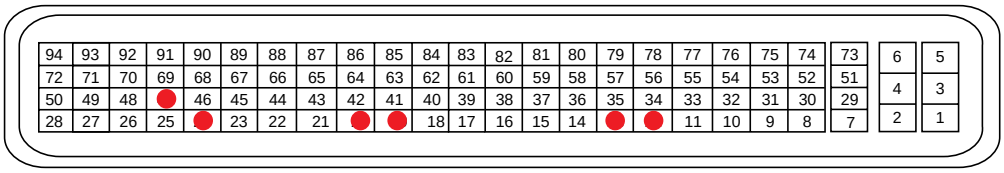

C44

EFRF300F

SIGNAL WAVEFORM AND DATA ED15F8EB

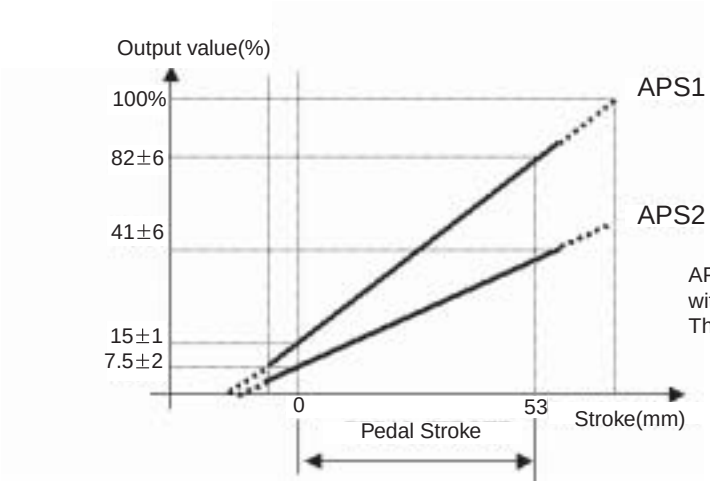

APS 1&2 output voltage increases smoothly in proportion with the depressing acceleration pedal amount.
The output voltage of the APS2 is half of the APS1

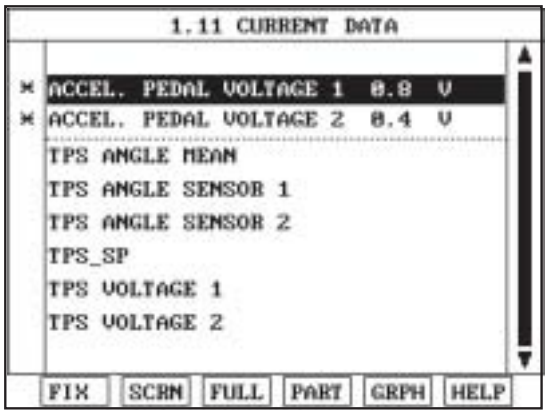

Fig.1

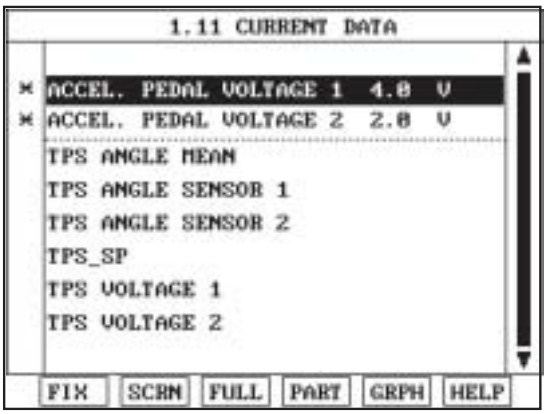

Fig.2

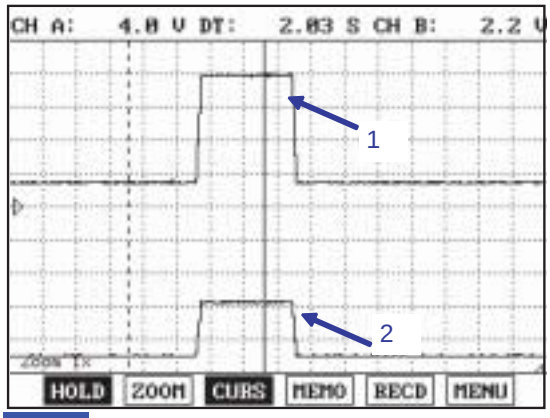

Fig.3

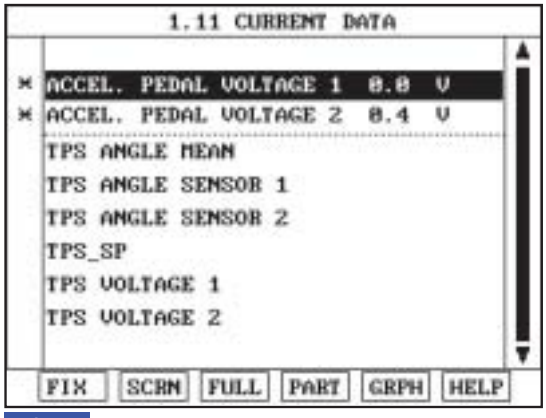

Fig.4

Fig.1) Output voltage with closed throttle status :
APS1 : Approx. 0.58~0.93V , APS2 : Approx. 0.29~0.36V
Fig.2) Output voltage with wide open throttle :
APS1 : Approx. 3.85~4.35V , APS2 : Approx. 1.93~2.18V
Fig.3) APS 1&2 output voltage increases smoothly in proportion with the depressing acceleration pedal amount. The output voltage of the APS2 is half of the APS1
Fig. 4) Open in APS1 power or signal circuit : Approx. 0V

MONITOR DTC STATUS EA3CC59B

1. Connect scan tool and select "Diagnostic Trouble Codes(DTCs)" mode
2. Press F4(DTAL) to select DTC information from the DTCs menu
3. Confirm that "DTC Readiness Flag" indicates "Complete". If not, drive the vehicle within conditions noted in the freeze frame data or enable conditions
4. Read "DTC Status" parameter

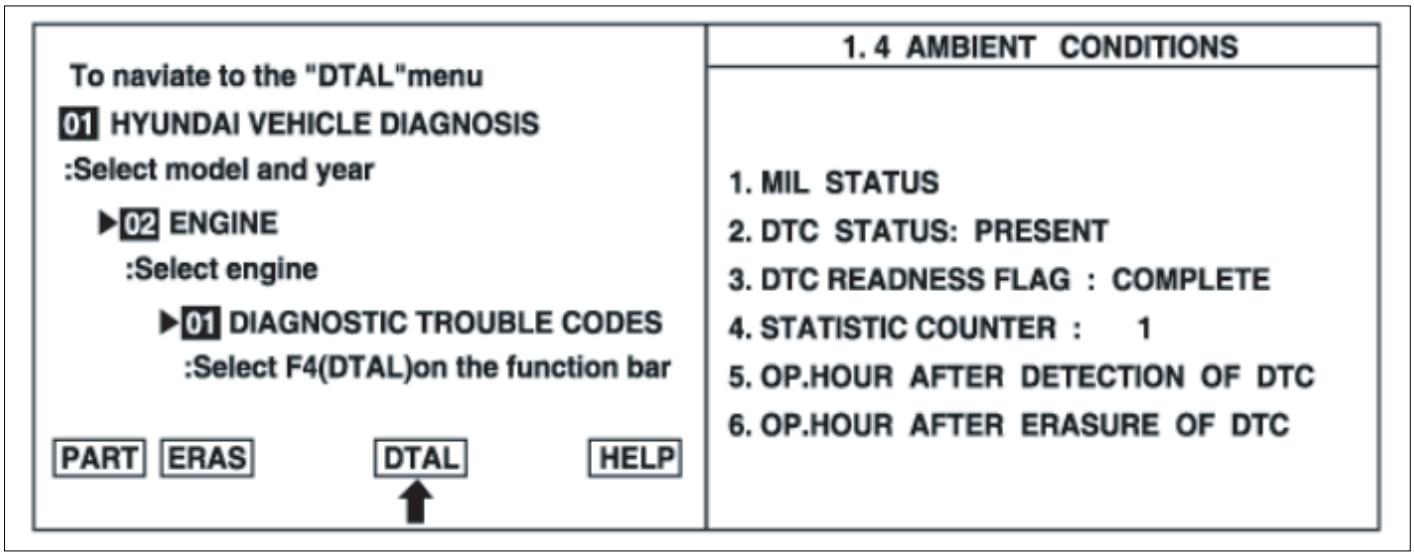

EFRF200D

5. Is parameter displayed "History(Not Present) fault"?

NOTE

- *History (Not Present) fault : DTC occurred but has been cleared.*
- *Present fault : DTC is occurring at present time.*

YES

▶ Fault is intermittent caused by poor contact in the sensor's and/or the ECM's connector, which was repaired but ECM memory was not cleared. Thoroughly check connectors for looseness, poor connection, bending, corrosion, contamination, deterioration, or damage. Repair or replace as necessary and go to "Verification of Vehicle Repair" procedure

NO

▶ Go to next step as below

POWER CIRCUIT INSPECTION E245AF08

1. Ignition "OFF"
2. Disconnect APS harness connector.
3. Ignition "ON" & Engine "OFF"
4. Measure voltage between terminal 4 of the APS1 harness connector and chassis ground

Specification : Approx. 5V

5. Is voltage within the specification?

YES

▶ Go to next step as below

NO

▶ Repair as necessary and go to "Verification of Vehicle Repair" procedure

SIGNAL CIRCUIT INSPECTION ED1CF992

1. Check for short to ground circuit

   1) Ignition "OFF"

   2) Measure resistance between terminal 2 of the APS harness connector and chassis ground

Specification : Infinite

   3) Is resistance within the specification?

YES

▶ Go to next step as below

NO

▶ Repair as necessary and go to "Verification of Vehicle Repair" procedure

2. Check for open in signal circuit

   1) Disconnect ECM connector

   2) Measure resistance between terminals 2 of the APS harness connector and 20 of the ECM harness connector

Specification : Approx. 0Ω

   3) Is resistance within the specification?

YES

▶ Go to next step as below

NO

▶ Repair as necessary and go to "Verification of Vehicle Repair" procedure

TERMINAL AND CONNECTOR INSPECTION E1D24706

1. Many malfunctions in the electrical system are caused by poor harness(es) and terminals. Faults can also be caused by interference from other electrical systems, and mechanical or chemical damage.

2. Thoroughly check connectors for looseness, poor connection, bending, corrosion, contamination, deterioration, or damage.

3. Has a problem been found?

YES

▶ Repair as necessary and go to "Verification of Vehicle Repair" procedure

NO

▶ Go to next step as below

COMPONENT INSPECTION EDEADFCE

1. Reconnect ECM and APS harness connector.

2. With ignition "ON", install Scantool and monitor the "APS1" parameter on the Scantool data list.

SPECIFICATION :

Test Condition	APS1
Closed Throttle Status	Approx. 0.58~0.93V
Wide Open Throttle	Approx. 3.85~4.35V

3. Is sensor data near the specified value?

YES

▶ Check for poor connection between ECM and component: backed out terminal, improper mating, broken locks or poor terminal to wire connection. Repair as necessary and go to "Verification of Vehicle Repair" procedure

NO

▶ Check APS for contamination, deterioration, or damage. Substitute with a known-good APS and check for proper operation. If the problem is corrected, replace APS and then go to "Verification of Vehicle Repair" procedure.

NOTE

It is necessary to perform the TPS adaptation procedure with Scan tool when the throttle body assembly or ECM is replaced.

■ TPS adaptation procedure
1. Erase previous TPS adaptation value using Scan tool.
2. Ignition "OFF" and then "ON" without cranking. Wait for 10 seconds under enable conditions
   - Enable conditions : Battery > 10V & Intake Air Temp. > 5.3℃(41.5°F) & 5.3℃(41.5°F) < Engine Coolant Temp. < 99.8℃(211.6°F)
3. After TPS adaptation, the system normality should be confirmed by reading out "FMY" on the Scan Tool

VERIFICATION OF VEHICLE REPAIR EF1A8F8B

After a repair, it is essential to verify that the fault has been corrected.

1. Connect scan tool and select "Diagnostic Trouble Codes(DTCs)" mode

2. Press F4(DTAL) and confirm that "DTC Readiness Flag" indicates "Complete". If not, drive the vehicle within conditions noted in the freeze frame data or enable conditions

3. Read "DTC Status" parameter

4. Is parameter displayed "History(Not Present) fault"?

YES

▶ System performing to specification at this time. Clear the DTC

NO

▶ Go to the applicable troubleshooting procedure.

DTC P2123 THROTTLE/PEDAL POSITION SENSOR/SWITCH "D" CIRCUIT HIGH INPUT

COMPONENT LOCATION E0532F43

Refer to DTC P2122.

GENERAL DESCRIPTION EFF1D209

Refer to DTC P2122.

DTC DESCRIPTION EA3A6F1B

ECM sets DTC P2123 if the ECM detects output voltage higher than the possible range of a properly operating APS1

DTC DETECTING CONDITION E0E9AE75

Item	Detecting Condition	Possible Cause
DTC Strategy	• Electrical Check	• Open in ground circuit • Short to battery in signal circuit • Poor connection in connectors • APS1
Enable Conditions	• Ignition "ON" • No error for supply voltage of APS1	
Threshold Value	• Sensor voltage 〉 4.7V	
Diagnostic Time	• -	

SPECIFICATION EEC054C8

Refer to DTC P2122.

SCHEMATIC DIAGRAM EC8806AD

Refer to DTC P2122.

SIGNAL WAVEFORM AND DATA EFACEBDF

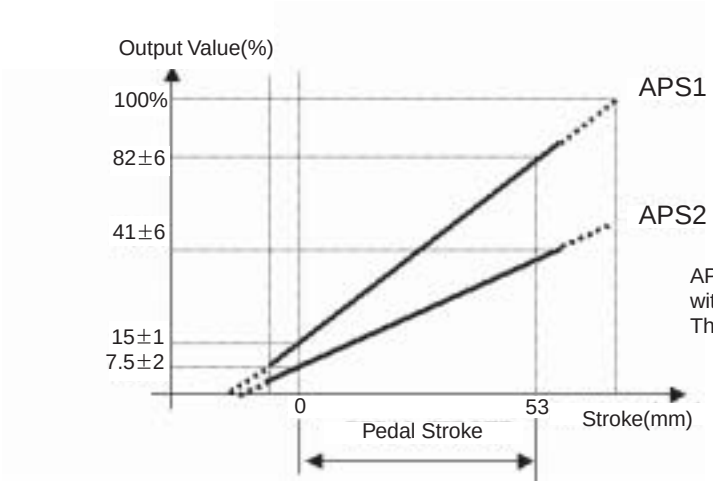

APS 1&2 output voltage increases smoothly in proportion with the depressing acceleration pedal amount.
The output voltage of the APS2 is half of the APS1

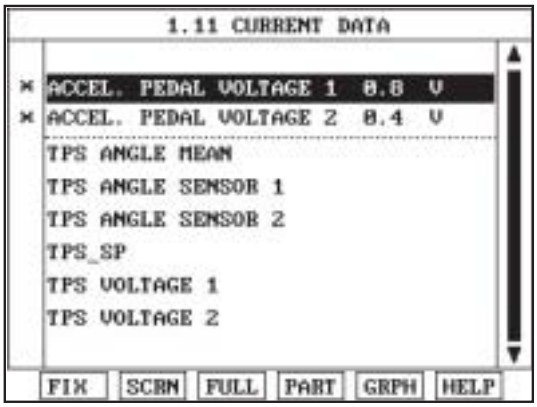

Fig.1

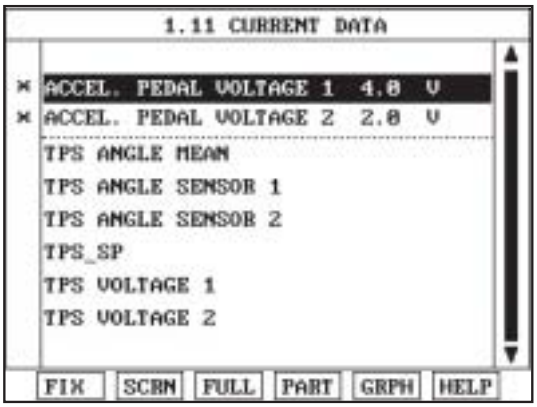

Fig.2

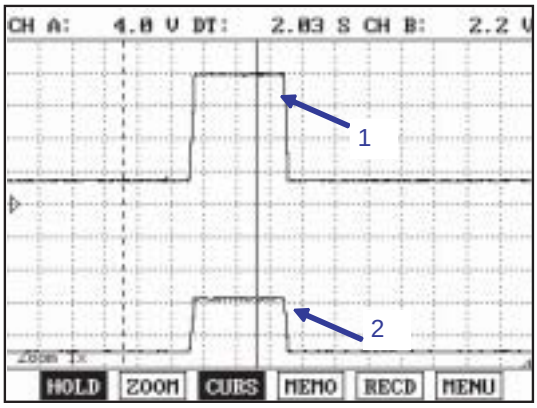

Fig.3

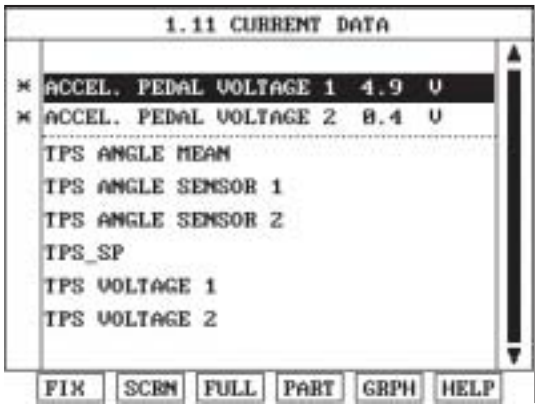

Fig.4

Fig.1) Output voltage with closed throttle status :
APS1 : Approx. 0.58~0.93V , APS2 : Approx. 0.29~0.36V
Fig.2) Output voltage with wide open throttle :
APS1 : Approx. 3.85~4.35V , APS2 : Approx. 1.93~2.18V
Fig.3) APS 1&2 output voltage increases smoothly in proportion with the depressing acceleration pedal amount. The output voltage of the APS2 is half of the APS1
Fig 4) Open in ground circuit : Approx. 5V

MONITOR DTC STATUS E6FADABB

Refer to DTC P2122.

GROUND CIRCUIT INSPECTION EEDA4FF0

1. Ignition "OFF"
2. Disconnect APS harness connector.
3. Measure resistance between terminal 5 of the APS harness connector and chassis ground

Specification : Approx. 0Ω

4. Is resistance within the specification?

YES

▶ Go to next step as below

NO

▶ Repair as necessary and go to "Verification of Vehicle Repair" procedure

SIGNAL CIRCUIT INSPECTION E3BFBB2E

1. Disconnect ECM connector
2. Ignition "ON" & Engine "OFF"
3. Measure voltage between terminal 2 of the APS1 harness connector and chassis ground

Specification : Approx. 0V

4. Is voltage within the specification?

YES

▶ Go to next step as below

NO

▶ Repair as necessary and go to "Verification of Vehicle Repair" procedure

TERMINAL AND CONNECTOR INSPECTION EFD1A41D

Refer to DTC P2122.

COMPONENT INSPECTION ED54868D

Refer to DTC P2122.

VERIFICATION OF VEHICLE REPAIR EC3018A9

Refer to DTC P2122.

DTC P2127 THROTTLE/PEDAL POSITION SENSOR/SWITCH "E" CIRCUIT LOW INPUT

COMPONENT LOCATION ED3DCB8D

Refer to DTC P2122.

GENERAL DESCRIPTION EF6D0E1F

Refer to DTC P2122.

DTC DESCRIPTION EA5F8E93

ECM sets DTC P2127 if the ECM detects output voltage lower than the possible range of a properly operating APS2

DTC DETECTING CONDITION ECBE3DBE

Item	Detecting Condition	Possible Cause
DTC Strategy	• Electrical Check	• Open in power or signal circuit • Short to ground in signal circuit • Poor connection in connectors • APS2
Enable Conditions	• Ignition "ON" • No error for supply voltage of APS2 • APS1 〉 0.9V	
Threshold Value	• Sensor voltage 〈 0.14V	
Diagnostic Time	• -	

SPECIFICATION E02BCB50

Refer to DTC P2122.

SCHEMATIC DIAGRAM E99D9A9A

Refer to DTC P2122.

SIGNAL WAVEFORM AND DATA E5AAC67D

Refer to DTC P2122.

MONITOR DTC STATUS E7B4E1BA

Refer to DTC P2122.

POWER CIRCUIT INSPECTION E69B3BBA

1. Ignition "OFF"
2. Disconnect APS harness connector.
3. Ignition "ON" & Engine "OFF"
4. Measure voltage between terminal 1 of the APS1 harness connector and chassis ground

Specification : Approx. 5V

5. Is voltage within the specification?

YES

▶ Go to next step as below

NO

▶ Repair as necessary and go to "Verification of Vehicle Repair" procedure

SIGNAL CIRCUIT INSPECTION E8BDCBD0

1. Check for short to ground circuit

   1) Ignition "OFF"

   2) Measure resistance between terminal 3 of the APS harness connector and chassis ground

Specification : Infinite

   3) Is resistance within the specification?

YES

▶ Go to next step as below

NO

▶ Repair as necessary and go to "Verification of Vehicle Repair" procedure

2. Check for open in signal circuit

   1) Disconnect ECM connector

   2) Measure resistance between terminals 3 of the APS harness connector and 20 of the ECM harness connector

Specification : Approx. 0Ω

   3) Is resistance within the specification?

YES

▶ Go to next step as below

NO

▶ Repair as necessary and go to "Verification of Vehicle Repair" procedure

TERMINAL AND CONNECTOR INSPECTION E0AE71F8

Refer to DTC P2122.

COMPONENT INSPECTION EFD7CF4C

1. Reconnect ECM and APS harness connector.

2. With ignition "ON", install Scantool and monitor the "APS2" parameter on the Scantool data list.

SPECIFICATION :

Test Condition	APS2
Closed Throttle Status	Approx. 0.29~0.36
Wide Open Throttle	Approx. 1.93~2.18V

3. Is sensor data near the specified value?

YES

▶ Check for poor connection between ECM and component: backed out terminal, improper mating, broken locks or poor terminal to wire connection. Repair as necessary and go to "Verification of Vehicle Repair" procedure

NO

▶ Check APS for contamination, deterioration, or damage. Substitute with a known-good APS and check for proper operation. If the problem is corrected, replace APS and then go to "Verification of Vehicle Repair" procedure.

NOTE

It is necessary to perform the TPS adaptation procedure with Scan tool when the throttle body assembly or ECM is replaced.

■ TPS adaptation procedure
1. Erase previous TPS adaptation value using Scan tool.
2. Ignition "OFF" and then "ON" without cranking. Wait for 10 seconds under enable conditions
   - Enable conditions : Battery > 10V & Intake Air Temp. > 5.3℃(41.5°F) & 5.3℃(41.5°F) < Engine Coolant Temp. < 99.8℃(211.6°F)
3. After TPS adaptation, the system normality should be confirmed by reading out "FMY" on the Scan Tool

VERIFICATION OF VEHICLE REPAIR ED60CE3F

Refer to DTC P2122.

DTC P2128 THROTTLE/PEDAL POSITION SENSOR/SWITCH "E" CIRCUIT HIGH INPUT

COMPONENT LOCATION EF77DFC8

Refer to DTC P2122.

GENERAL DESCRIPTION E55980C7

Refer to DTC P2122.

DTC DESCRIPTION E51FD2F2

ECM sets DTC P2128 if the ECM detects output voltage higher than the possible range of a properly operating APS2

DTC DETECTING CONDITION EAB3E233

Item	Detecting Condition	Possible Cause
DTC Strategy	• Electrical Check	• Open in ground circuit • Short to battery in signal circuit • Poor connection in connectors • APS2
Enable Conditions	• Ignition "ON" • No error for supply voltage of APS2	
Threshold Value	• Sensor voltage 〉 2.6V	
Diagnostic Time	• -	

SPECIFICATION EEC7A056

Refer to DTC P2122.

SCHEMATIC DIAGRAM EE8683CA

Refer to DTC P2122.

SIGNAL WAVEFORM AND DATA EAADF6CA

Refer to DTC P2123.

MONITOR DTC STATUS EC2FDEDA

Refer to DTC P2122.

GROUND CIRCUIT INSPECTION E8641AF2

1. Ignition "OFF"
2. Disconnect APS harness connector.
3. Measure resistance between terminal 6 of the APS harness connector and chassis ground

Specification : Approx. 0Ω

4. Is resistance within the specification?

YES

▶ Go to next step as below

NO

▶ Repair as necessary and go to "Verification of Vehicle Repair" procedure

SIGNAL CIRCUIT INSPECTION EE20CBEB

1. Disconnect ECM connector
2. Ignition "ON" & Engine "OFF"
3. Measure voltage between terminal 3 of the APS harness connector and chassis ground

Specification : Approx. 0V

4. Is voltage within the specification?

YES

▶ Go to next step as below

NO

▶ Repair as necessary and go to "Verification of Vehicle Repair" procedure

TERMINAL AND CONNECTOR INSPECTION EC8F0A1B

Refer to DTC P2122.

COMPONENT INSPECTION E90F23EF

Refer to DTC P2127.

VERIFICATION OF VEHICLE REPAIR EBCCF36A

Refer to DTC P2122.

DTC P2138 THROTTLE/PEDAL POSITION SENSOR/SWITCH "D" / "E" VOLTAGE CORRELATION

COMPONENT LOCATION EFD634E2

Refer to DTC P2122.

GENERAL DESCRIPTION E5EC1A3F

Refer to DTC P2122.

DTC DESCRIPTION ECD68156

ECM sets DTC P2138 if the ECM detects output voltage of the APS1 is not proportion to APS2

DTC DETECTING CONDITION EC7A2C51

Item		Detecting Condition	Possible Cause
DTC Strategy		• Plausibility check	• Poor connection in connectors • APS1 • APS2
Enable Conditions	Case1	• Ignition "ON" • No electrical error	
	Case2	• APS1 〉 0.99V • APS2 〉 0.5V	
Threshold Value	Case1	• Undesired gas pedal activation againstthe drivers demand)	
	Case2	• Ratio error between APS1 & APS2	
Diagnostic Time	Case1	• 0.10sec.	
	Case2	• 0.35sec.	

SPECIFICATION E58EE8A5

Refer to DTC P2122.

SCHEMATIC DIAGRAM EA229FC7

Refer to DTC P2122.

SIGNAL WAVEFORM AND DATA E29A0A0C

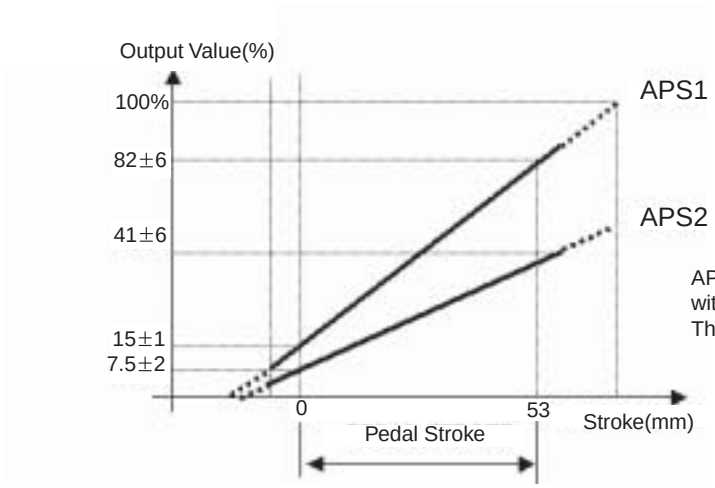

APS 1&2 output voltage increases smoothly in proportion with the depressing acceleration pedal amount.
The output voltage of the APS2 is half of the APS1

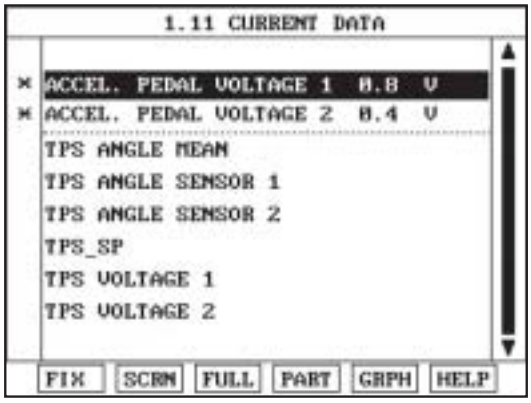

Fig.1

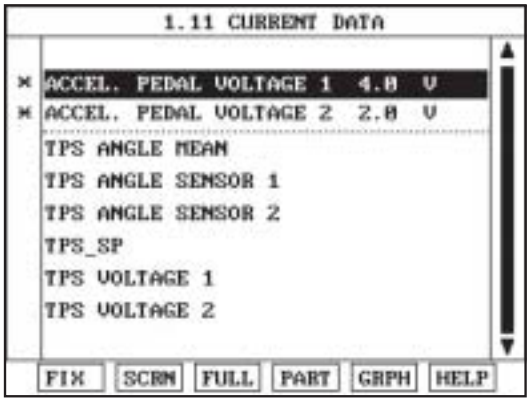

Fig.2

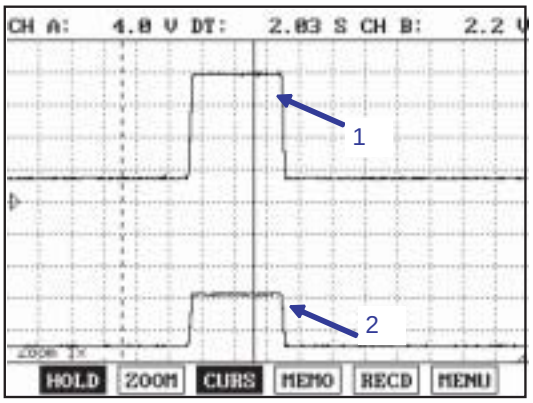

Fig.3

Fig.1) Output voltage with closed throttle status :
APS1 : Approx. 0.58~0.93V , APS2 : Approx. 0.29~0.36V
Fig.2) Output voltage with wide open throttle :
APS1 : Approx. 3.85~4.35V , APS2 : Approx. 1.93~2.18V
Fig.3) APS 1&2 output voltage increases smoothly in proportion with the depressing acceleration pedal amount. The output voltage of the APS2 is half of the APS1

MONITOR DTC STATUS E5384EB6

Refer to DTC P2122.

TERMINAL AND CONNECTOR INSPECTION E7BC81BF

Refer to DTC P2122.

COMPONENT INSPECTION E5185F74

Refer to DTC P2127.

VERIFICATION OF VEHICLE REPAIR EF796F20

Refer to DTC P2122.

DTC P2159 VEHICLE SPEED SENSOR "B" RANGE/PERFORMANCE
DTC P0501 VEHICLE SPEED SENSOR RANGE/PERFORMANCE

GENERAL DESCRIPTION E70A060E

The Wheel Speed Sensor (WSS) generates a waveform with a frequency proportional to the speed of the vehicle. The signal generated by the WSS informs the ECM not only if the vehicle speed is low or high but also if the vehicle is or is not moving. The ECM uses this signal to control the fuel injection, ignition timing, transaxle shift scheduling and torque converter clutch scheduling. The WSS signal is also used to detect rough road conditions.

DTC DESCRIPTION EFABDAFF

The ECM evaluates engine speed and mass air flow if there is no vehicle speed signal. This evaluation of both values will detect open circuit or short circuit errors on the wheel speed sensor. The ECM sets DTC P2159 or P0501 if there is no vehicle speed signal from wheel speed sensor while both engine speed and mass air flow are higher than predetermined threshold during the predetermined time

DTC DETECTING CONDITION E33A1EEE

Item	Detecting Condition	Possible Cause
DTC Strategy	• Plausibility Check	• Open or short in harness • Poor connection in connectors • VSS
Enable Conditions	• Engine speed 〉 2016(M/T),2112(A/T) & Engine speed 〈 Max. engine speed + 500RPM • Air mass flow 〉 223mg/tdc & • No fuel shut off • Coolant Temp. 〉 60℃(140°F) • time after failure conditions(M/T:50sec. , A/T:60sec.)	
Threshold Value	• VSS = 0	
Diagnostic Time	• 50~60sec.	

SCHEMATIC DIAGRAM EBEE675A

[Circuit Diagram]

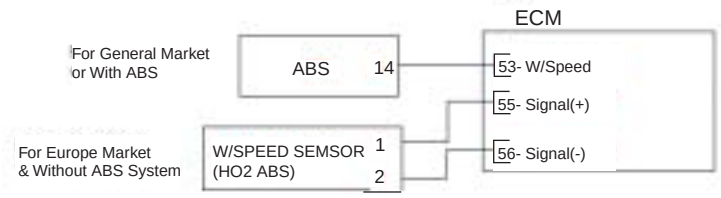

[Connection Information]

Terminal	Connected to	Function
1	ECM Terminal 55	Signal(+)
2	ECM Terminal 56	Signal(-)

[Harness Connector]

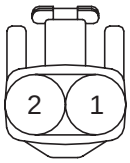

E67

ECM

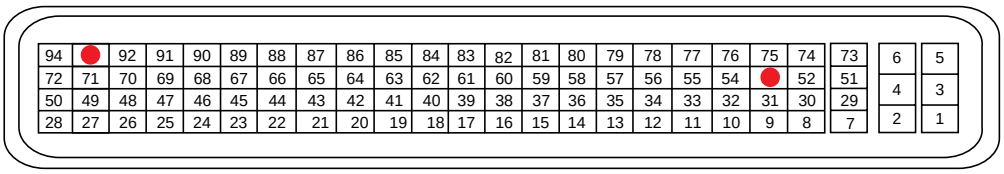

C44

EFRF300Y

MONITOR DTC STATUS E2FDD0F9

1. Connect scan tool and select "Diagnostic Trouble Codes(DTCs)" mode
2. Press F4(DTAL) to select DTC information from the DTCs menu
3. Confirm that "DTC Readiness Flag" indicates "Complete". If not, drive the vehicle within conditions noted in the freeze frame data or enable conditions
4. Read "DTC Status" parameter

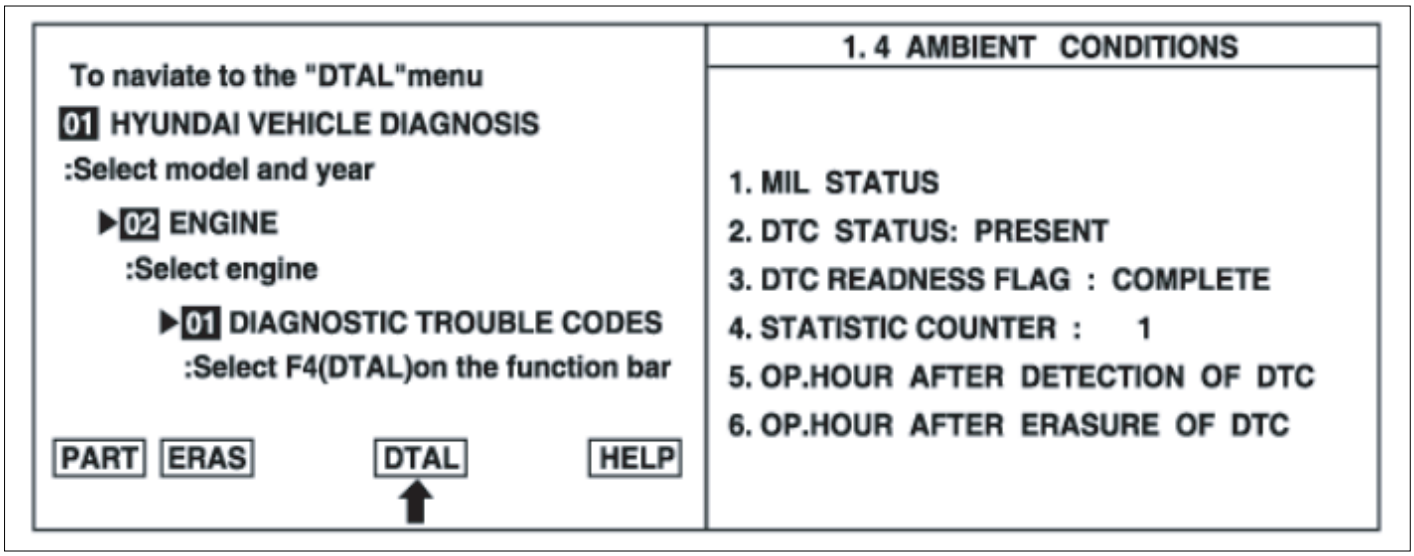

EFRF200D

5. Is parameter displayed "History(Not Present) fault"?

NOTE

- *History (Not Present) fault : DTC occurred but has been cleared.*
- *Present fault : DTC is occurring at present time.*

YES

▶ Fault is intermittent caused by poor contact in the sensor's and/or the ECM's connector, which was repaired but ECM memory was not cleared. Thoroughly check connectors for looseness, poor connection, bending, corrosion, contamination, deterioration, or damage. Repair or replace as necessary and go to "Verification of Vehicle Repair" procedure

NO

▶ [With ABS] Go to "Monitor Scan tool Data" procedure
[Without ABS system] Go to "Signal Circuit Inspection[Without ABS]" procedure

MONITOR SCANTOOL DATA E0855D23

1. With vehicle raised on a lift , start the engine and place transaxle in Drive. Let vehicle idle and verify speedometer indicates approx. 10km/h or more(6mph or more) on the instrument cluster.

2. Connect Scantool and select ABS system.

3. Monitor the "WHEEL SPD SENSOR-FR" parameter on the current data list.

Specification : 10km/h or more(6mph or more)

4. Is value within the specification?

YES

▶ Wheel speed sensor is OK. Go to Go to "Signal Circuit Inspection[With ABS]" procedure

NO

▶ Check for open or short circuit between wheel speed sensor(FR) and ABS control module If problems are found, repair as necessary and go to "Verification of Vehicle Repair" procedureIf OK, Check wheel speed sensor(FR) as follow:
- Gap between ABS sensor and trigger wheel (Air gap : 0.3~1.1 mm(0.011 ~ 0.043 in))
- Trigger wheel condition
- Sensor resistance : Approx. 1,300~1,500Ω at 20℃(68°F)Replace wheel speed sensor as necessary and go to "Verification of Vehicle Repair" procedure.

SIGNAL CIRCUIT INSPECTION EAB0DD1F

[WITH ABS]

1. Check for open in circuit

   1) Ignition "OFF"

   2) Disconnect ECM and ABS Control Module connectors

   3) Measure resistance between terminals 53 of the ECM harness connector and 14 of the ABS Control Module harness connector

Specification : Approx. 0Ω

4) Is resistance within the specification?

YES

▶ Go to next step as below

NO

▶ Repair as necessary and go to "Verification of Vehicle Repair" procedure.

2. Check for short to ground in circuit

1) Measure resistance between terminal 53 of the ECM harness connector and chassis ground

Specification : Infinite

2) Is resistance within the specification?

YES

▶ Check for poor connection between ECM and component: backed out terminal, improper mating, broken locks or poor terminal to wire connection. Repair as necessary and go to "Verification of Vehicle Repair" procedure

NO

▶ Repair as necessary and go to "Verification of Vehicle Repair" procedure.

[WITHOUT ABS SYSTEM]

3. Check for open in circuit

1) Ignition "OFF"

2) Disconnect ECM and wheel speed sensor(front right) harness connector

3) Measure resistance between terminals 1 of the wheel speed sensor harness connector and 55 of the ECM harness connector.

4) Measure resistance between terminals 2 of the wheel speed sensor harness connector and 56 of the ECM harness connector.

Specification : Approx. 0Ω

5) Is resistance within the specification?

YES

▶ Go to next step as below

NO

▶ Repair as necessary and go to "Verification of Vehicle Repair" procedure.

4. Check for short to ground in circuit

1) Measure resistance between terminal 55 of the ECM harness connector and chassis ground

2) Measure resistance between terminal 56 of the ECM harness connector and chassis ground

Specification : Infinite

3) Is resistance within the specification?

YES

▶ Check for poor connection between ECM and component: backed out terminal, improper mating, broken locks or poor terminal to wire connection. Repair as necessary and go to "Verification of Vehicle Repair" procedure

NO

▶ Repair as necessary and go to "Verification of Vehicle Repair" procedure.

VERIFICATION OF VEHICLE REPAIR ECE2F507

After a repair, it is essential to verify that the fault has been corrected.

1. Connect scan tool and select "Diagnostic Trouble Codes(DTCs)" mode
2. Press F4(DTAL) and confirm that "DTC Readiness Flag" indicates "Complete". If not, drive the vehicle within conditions noted in the freeze frame data or enable conditions
3. Read "DTC Status" parameter
4. Is parameter displayed "History(Not Present) fault"?

YES

▶ System performing to specification at this time. Clear the DTC

NO

▶ Go to the applicable troubleshooting procedure.

DTC P2187 SYSTEM TOO LEAN AT IDLE (ADDITIVE) (BANK 1)

GENERAL DESCRIPTION EECB85AC

In order to provide the best possible combination of drivability, fuel economy and emission control, the ECM uses a closed loop air/fuel metering system. The ECM monitors the HO2S signal voltage and adjusts fuel delivery based it in closed loop fuel control. Changes in fuel delivery will be indicated by the long-term and the short-term fuel trim values. The ideal fuel trim value is around 0%. The ECM will add fuel when the HO2S signal is indicating a lean condition. Additional fuel is indicated by fuel trim values that are above 0%. The ECM will reduce fuel when the HO2S signal is indicating a rich condition. Reduction in fuel is indicated by fuel trim values that are below 0%. The DTC relevant to fuel trim will be set when the amount reaches excessive levels because of a lean or rich condition.

DTC DESCRIPTION EA1A0B32

If the lambda controller reaches the maximum or minimum threshold, then feedback control is no longer possible and emissions will be increased. The ECM sets DTC P2187 if no proportional post catalyst fuel trim adaptation occurs for a defined time after the lambda controller has reached its maximum threshold at idle.

DTC DETECTING CONDITION EAD70B6C

Item	Detecting Condition	Possible Cause
DTC Strategy	• Lambda adaptation check	• Air leakage • Improper Fuel pressure or dirty fuel. • Blocked/Leaking injectors • Incorrect valve timing • Uneven compression
Enable Conditions	• In closed loop control status • Engine speed 〉 512rpm • Mass air flow 〉 0mg/stk • Engine Coolant temp. 〉 75℃(167°F) • Ambient pressure 〉 0 • Intake manifold air temperature 〉 -40℃(-40°F) • In canister loading status	
Threshold Value	• Lambda adaptation additive part 〈 -25mg/stk	
Diagnostic Time	• 20sec.	

MONITOR DTC STATUS ECDABBAA

NOTE

If any codes relating to injectors, HO2S, ECT(Engine Coolant Temperature)Sensor, Throttle Position sensor, Injectors or Mass Air Flow Sensor are stored, do ALL REPAIRS associated with those codes before proceeding with this troubleshooting tree.

1. Connect scan tool and select "Diagnostic Trouble Codes(DTCs)" mode
2. Press F4(DTAL) to select DTC information from the DTCs menu
3. Confirm that "DTC Readiness Flag" indicates "Complete". If not, drive the vehicle within conditions noted in the freeze frame data or enable conditions
4. Read "DTC Status" parameter

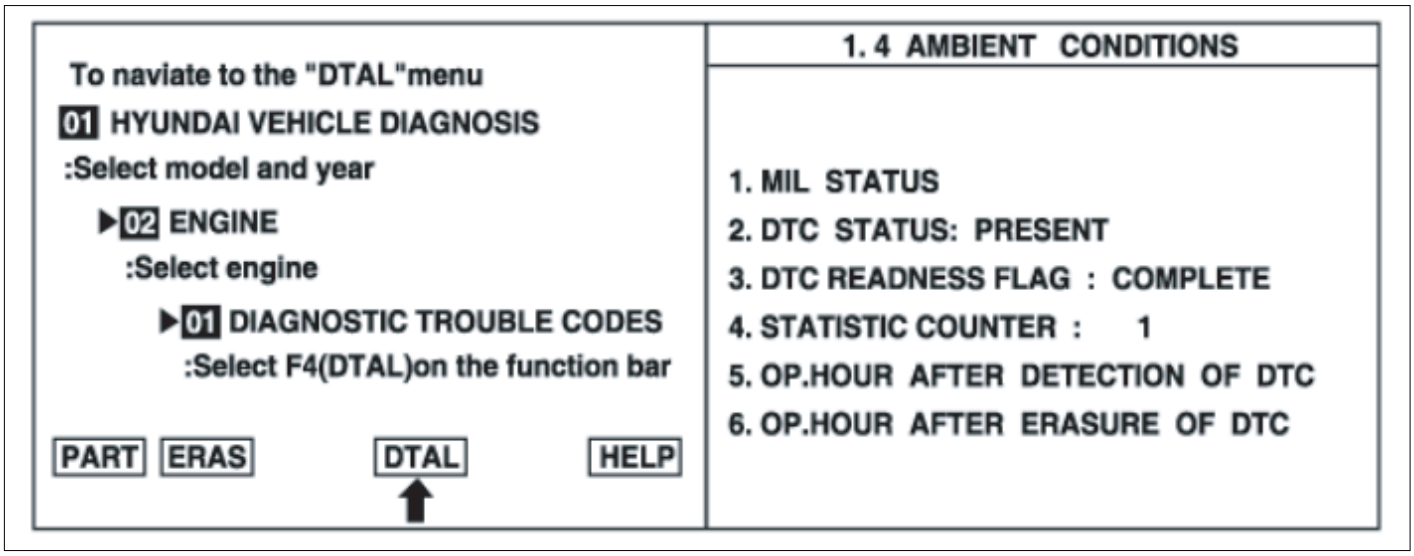

EFRF200D

5. Is parameter displayed "History(Not Present) fault"?

NOTE

- *History (Not Present) fault : DTC occurred but has been cleared.*
- *Present fault : DTC is occurring at present time.*

YES

▶ Fault is intermittent caused by poor contact in the sensor's and/or the ECM's connector, which was repaired but ECM memory was not cleared. Thoroughly check connectors for looseness, poor connection, bending, corrosion, contamination, deterioration, or damage. Repair or replace as necessary and go to "Verification of Vehicle Repair" procedure

NO

▶ Go to next step as below

MONITOR ACTUATION TEST E8BCE35D

NOTE

The main purpose of this test is to identify potential engine mechanical condition problems and fuel and ignition systems problems that are not common to all cylinders. For best results, perform this test while maintaining as steady an rpm reading as possible.
Caution! Before beginning tests; set the parking brake, place gear selector in P or N and block drive wheels for safety.

1. Warm up the engine to normal operating temperature and let it idle.

2. Install Scan Tool and select "INJECTOR #1" parameter on the Actuation Test mode shown in the figure.

3. Monitor engine rpm and shut off the injector #1 by pressing "STRT(F1)" key

4. Repeat procedure on all injectors and record the engine rpm.

Specification : All cylinders should show an even RPM drop.

5. Was each cylinder's rpm drop within the same value?

YES

▶ Go to next step as below

NO

▶ Cylinders with the least amount of RPM drop are not contributing their share of power.
Go to "Check for Leak or Clog Injectors" procedure.

NOTE

If the RPM loss between cylinders is quite large(200RPM or more) and engine has high mileage, there is possibility of engine wear. Perform compression test with pressure gauge to check the engine wear

AIR LEAKAGE INSPECTION E417E191

1. Visually/physically inspect the air leakage in intake/exhaust system as following items,

   1) If OK, go to next step

   2) If NG, repair as necessary and go to "Verification of Vehicle Repair" procedure
      - Vacuum hoses for splits, kinks and improper connections.
      - Throttle body gasket
      - Gasket between intake manifold and cylinder head
      - Seals between intake manifold and fuel injectors
      - Exhaust system between HO2S and Three way catalyst for air leakage

2. Check the EVAP. system for leakage

   1) Remove the manifold side vacuum hose from the EVAP canister purge valve.

   2) Using a hand vacuum pump apply specified vacuum(Approx. 15 in, Hg) to the manifold side of the valve

   3) Does the valve hold vacuum?

      YES

      ▶ Go to "Fuel System Inspection" procedure

      NO

      ▶ Repair air leakage and go to "Verification of Vehicle Repair" procedure

FUEL SYSTEM INSPECTION EEE5F344

1. Check the fuel for excessive water, alcohol, or other contaminants. Replace contaminated fuel as necessary.

2. Install a fuel pressure gage

3. Start engine and let it idle. Inspect fuel pressure.

Specification : 350kPa(3.50 kg/㎠,50psi)

4. Is fuel pressure within the specified value?

YES

▶ Go to next step as below

NO

▶ Repair air leakage and go to "Verification of Vehicle Repair" procedure

CHECK FOR LEAKAGE OR CLOGGING INJECTORS

1. Check the fuel injectors for clogging or any restrictions

2. Is the fuel injector OK?

YES

▶ Visually/physically inspect the following engine mechanical problem and go to "Verification of Vehicle Repair" procedure
- Leaky or sticky valves or rings
- Excessive valve deposits
- Weak valve spring
- Leaking head gasket

If NG, repair as necessary and go to "Verification of Vehicle Repair" procedure

NO

▶ Repair as necessary and go to "Verification of Vehicle Repair" procedure

VERIFICATION OF VEHICLE REPAIR E8F990AC

After a repair, it is essential to verify that the fault has been corrected.

1. Connect scan tool and select "Diagnostic Trouble Codes(DTCs)" mode

2. Press F4(DTAL) and confirm that "DTC Readiness Flag" indicates "Complete". If not, drive the vehicle within conditions noted in the freeze frame data or enable conditions

3. Read "DTC Status" parameter

4. Is parameter displayed "History(Not Present) fault"?

YES

▶ System performing to specification at this time. Clear the DTC

NO

▶ Go to the applicable troubleshooting procedure.

DTC P2188 SYSTEM TOO RICH AT IDLE (BANK 1)

GENERAL DESCRIPTION EED643CE

Refer to DTC P2187.

DTC DESCRIPTION E34F9BA4

If the lambda controller reaches the maximum or minimum threshold, then feedback control is no longer possible and emissions will be increased. The ECM sets DTC P2188 if no proportional post catalyst fuel trim adaptation occurs for a defined time after the lambda controller has reached its minimum threshold at idle.

DTC DETECTING CONDITION EA1283BA

Item	Detecting Condition	Possible Cause
DTC Strategy	• Lambda adaptation check	• Air leakage • Improper Fuel pressure or dirty fuel. • Blocked/Leaking injectors • Incorrect valve timing • Uneven compression
Enable Conditions	• In closed loop control status • Engine speed 〉 512rpm • Mass air flow 〉 0mg/stk • Engine Coolant temp. 〉 75℃(167°F) • Ambient pressure 〉 0 • Intake manifold air temperature 〉 -40℃(-40°F) • In canister loading status	
Threshold Value	• Lambda adaptation additive part 〉 4mg/stk	
Diagnostic Time	• 20sec.	

MONITOR DTC STATUS EB5BDBB5

Refer to DTC P2187.

MONITOR ACTUATION TEST E105BED1

Refer to DTC P2187.

AIR LEAKAGE INSPECTION E72FC72F

1. Visually/physically inspect the air leakage in intake/exhaust system as following items,

   1) If OK, go to next step

   2) If NG, repair as necessary and go to "Verification of Vehicle Repair" procedure
      - Vacuum hoses for splits, kinks and improper connections.
      - Throttle body gasket
      - Gasket between intake manifold and cylinder head
      - Seals between intake manifold and fuel injectors
      - Exhaust system between HO2S and Three way catalyst for air leakage

2. Check the EVAP. system for leakage

   1) Remove the manifold side vacuum hose from the EVAP canister purge valve.

   2) Using a hand vacuum pump apply specified vacuum(Approx. 15 in, Hg) to the manifold side of the valve

3) Does the valve hold vacuum?

YES

▶ Go to "Fuel System Inspection" procedure

NO

▶ Repair air leakage and go to "Verification of Vehicle Repair" procedure

FUEL SYSTEM INSPECTION EFFBADDB

1. Check the fuel for excessive water, alcohol, or other contaminants. Replace contaminated fuel as necessary.
2. Install a fuel pressure gage
3. Start engine and let it idle. Inspect fuel pressure.

Specification : 350kPa(3.50 kg/㎠,50psi)

4. Is fuel pressure within the specified value?

YES

▶ Go to next step as below

NO

▶ Repair air leakage and go to "Verification of Vehicle Repair" procedure

CHECK FOR LEAKAGE OR CLOGGING INJECTORS

1. Check the fuel injectors for clogging or any restrictions
2. Is the fuel injector OK?

YES

▶ Visually/physically inspect the following engine mechanical problem and go to "Verification of Vehicle Repair" procedure
- Leaky or sticky valves or rings
- Excessive valve deposits
- Weak valve spring
- Leaking head gasket

If NG, repair as necessary and go to "Verification of Vehicle Repair" procedure

NO

▶ Repair as necessary and go to "Verification of Vehicle Repair" procedure

VERIFICATION OF VEHICLE REPAIR E44A4C03

Refer to DTC P2187.

DTC P2191 SYSTEM TOO LEAN AT HIGHER LOAD (MULTIPLE) (BANK 1)

GENERAL DESCRIPTION E4FEFDFC

In order to provide the best possible combination of drivability, fuel economy and emission control, the ECM uses a closed loop air/fuel metering system. The ECM monitors the HO2S signal voltage and adjusts fuel delivery based it in closed loop fuel control. Changes in fuel delivery will be indicated by the long-term and the short-term fuel trim values. The ideal fuel trim value is around 0%. The ECM will add fuel when the HO2S signal is indicating a lean condition. Additional fuel is indicated by fuel trim values that are above 0%. The ECM will reduce fuel when the HO2S signal is indicating a rich condition. Reduction in fuel is indicated by fuel trim values that are below 0%. The DTC relevant to fuel trim will be set when the amount reaches excessive levels because of a lean or rich condition.

DTC DESCRIPTION ECA721A4

If the lambda controller reaches the maximum or minimum threshold, then feedback control is no longer possible and emissions will be increased. The ECM sets DTC P2191 if no proportional post catalyst fuel trim adaptation occurs for a defined time after the lambda controller has reached its maximum threshold at part load

DTC DETECTING CONDITION E4E8ED3F

Item	Detecting Condition	Possible Cause
DTC Strategy	• Lambda adaptation check	• Air leakage • Improper Fuel pressure or dirty fuel. • Blocked/Leaking injectors • Incorrect valve timing • Uneven compression
Enable Conditions	• In closed loop control status • Engine speed 〉 512rpm • Mass air flow 〉 0mg/stk • Engine Coolant temp. 〉 75℃(167°F) • Ambient pressure 〉 0 • Intake manifold air temperature 〉 -40℃(-40°F) • In canister loading status	
Threshold Value	• Lambda adaptation multiplicative part 〈 -25%	
Diagnostic Time	• 20sec.	

MONITOR DTC STATUS EB12D248

NOTE

If any codes relating to injectors, HO2S, ECT(Engine Coolant Temperature)Sensor, Throttle Position sensor, Injectors or Mass Air Flow Sensor are stored, do ALL REPAIRS associated with those codes before proceeding with this troubleshooting tree.

1. Connect scan tool and select "Diagnostic Trouble Codes(DTCs)" mode
2. Press F4(DTAL) to select DTC information from the DTCs menu
3. Confirm that "DTC Readiness Flag" indicates "Complete". If not, drive the vehicle within conditions noted in the freeze frame data or enable conditions
4. Read "DTC Status" parameter

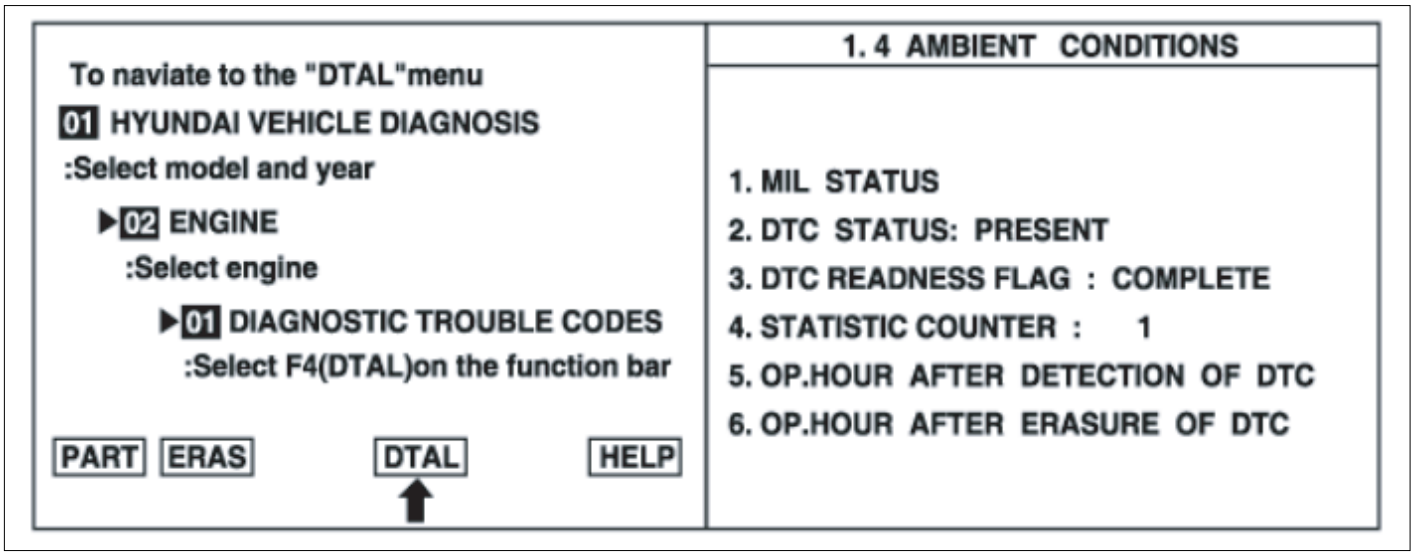

EFRF200D

5. Is parameter displayed "History(Not Present) fault"?

NOTE

- *History (Not Present) fault : DTC occurred but has been cleared.*
- *Present fault : DTC is occurring at present time.*

YES

▶ Fault is intermittent caused by poor contact in the sensor's and/or the ECM's connector, which was repaired but ECM memory was not cleared. Thoroughly check connectors for looseness, poor connection, bending, corrosion, contamination, deterioration, or damage. Repair or replace as necessary and go to "Verification of Vehicle Repair" procedure

NO

▶ Go to next step as below

MONITOR ACTUATION TEST ECAD721A

NOTE

The main purpose of this test is to identify potential engine mechanical condition problems and fuel and ignition systems problems that are not common to all cylinders. For best results, perform this test while maintaining as steady an rpm reading as possible.
Caution! Before beginning tests; set the parking brake, place gear selector in P or N and block drive wheels for safety.

1. Warm up the engine to normal operating temperature and let it idle.

2. Install Scan Tool and select "INJECTOR #1" parameter on the Actuation Test mode shown in the figure.

3. Monitor engine rpm and shut off the injector #1 by pressing "STRT(F1)" key

4. Repeat procedure on all injectors and record the engine rpm.

Specification : All cylinders should show an even RPM drop.

5. Was each cylinder's rpm drop within the same value?

YES

▶ Go to next step as below

NO

▶ Cylinders with the least amount of RPM drop are not contributing their share of power.
Go to "Check for Leak or Clog Injectors" procedure.

NOTE

If the RPM loss between cylinders is quite large(200RPM or more) and engine has high mileage, there is possibility of engine wear. Perform compression test with pressure gauge to check the engine wear

AIR LEAKAGE INSPECTION E1FF9E8B

1. Visually/physically inspect the air leakage in intake/exhaust system as following items,

   1) If OK, go to next step

   2) If NG, repair as necessary and go to "Verification of Vehicle Repair" procedure
      - Vacuum hoses for splits, kinks and improper connections.
      - Throttle body gasket
      - Gasket between intake manifold and cylinder head
      - Seals between intake manifold and fuel injectors
      - Exhaust system between HO2S and Three way catalyst for air leakage

2. Check the EVAP. system for leakage

   1) Remove the manifold side vacuum hose from the EVAP canister purge valve.

   2) Using a hand vacuum pump apply specified vacuum(Approx. 15 in, Hg) to the manifold side of the valve

   3) Does the valve hold vacuum?

      YES

      ▶ Go to "Fuel System Inspection" procedure

      NO

      ▶ Repair air leakage and go to "Verification of Vehicle Repair" procedure

FUEL SYSTEM INSPECTION EAE25D49

1. Check the fuel for excessive water, alcohol, or other contaminants. Replace contaminated fuel as necessary.

2. Install a fuel pressure gage

3. Start engine and let it idle. Inspect fuel pressure.

Specification : 350kPa(3.50 kg/㎠,50psi)

4. Is fuel pressure within the specified value?

YES

▶ Go to next step as below

NO

▶ Repair air leakage and go to "Verification of Vehicle Repair" procedure

CHECK FOR LEAKAGE OR CLOGGING INJECTORS

1. Check the fuel injectors for clogging or any restrictions

2. Is the fuel injector OK?

YES

▶ Visually/physically inspect the following engine mechanical problem and go to "Verification of Vehicle Repair" procedure
- Leaky or sticky valves or rings
- Excessive valve deposits
- Weak valve spring
- Leaking head gasket

If NG, repair as necessary and go to "Verification of Vehicle Repair" procedure

NO

▶ Repair as necessary and go to "Verification of Vehicle Repair" procedure

VERIFICATION OF VEHICLE REPAIR E752EDD5

After a repair, it is essential to verify that the fault has been corrected.

1. Connect scan tool and select "Diagnostic Trouble Codes(DTCs)" mode

2. Press F4(DTAL) and confirm that "DTC Readiness Flag" indicates "Complete". If not, drive the vehicle within conditions noted in the freeze frame data or enable conditions

3. Read "DTC Status" parameter

4. Is parameter displayed "History(Not Present) fault"?

YES

▶ System performing to specification at this time. Clear the DTC

NO

▶ Go to the applicable troubleshooting procedure.

DTC P2192 SYSTEM TOO RICH AT HIGHER LOAD (BANK 1)

GENERAL DESCRIPTION EEB8D857

Refer to DTC P2191.

DTC DESCRIPTION EB433FB5

If the lambda controller reaches the maximum or minimum threshold, then feedback control is no longer possible and emissions will be increased. The ECM sets DTC P2192 if no proportional post catalyst fuel trim adaptation occurs for a defined time after the lambda controller has reached its minimum threshold at part load

DTC DETECTING CONDITION EFFBEAFB

Item	Detecting Condition	Possible Cause
DTC Strategy	• Lambda adaptation check	• Air leakage • Improper Fuel pressure or dirty fuel. • Blocked/Leaking injectors • Incorrect valve timing • Uneven compression
Enable Conditions	• In closed loop control status • Engine speed 〉 512rpm • Mass air flow 〉 0mg/stk • Engine Coolant temp. 〉 75℃(167°F) • Ambient pressure 〉 0 • Intake manifold air temperature 〉 -40℃(-40°F) • In canister loading status	
Threshold Value	• Lambda adaptation multiplicative part 〉 25%	
Diagnostic Time	• 20sec.	

MONITOR DTC STATUS EC8F708D

Refer to DTC P2191.

MONITOR ACTUATION TEST EEA4E4CD

Refer to DTC P2191.

AIR LEAKAGE INSPECTION E5C855B7

1. Visually/physically inspect the air leakage in intake/exhaust system as following items,

   1) If OK, go to next step

   2) If NG, repair as necessary and go to "Verification of Vehicle Repair" procedure
      - Vacuum hoses for splits, kinks and improper connections.
      - Throttle body gasket
      - Gasket between intake manifold and cylinder head
      - Seals between intake manifold and fuel injectors
      - Exhaust system between HO2S and Three way catalyst for air leakage

2. Check the EVAP. system for leakage

   1) Remove the manifold side vacuum hose from the EVAP canister purge valve.

   2) Using a hand vacuum pump apply specified vacuum(Approx. 15 in, Hg) to the manifold side of the valve

3) Does the valve hold vacuum?

YES

▶ Go to "Fuel System Inspection" procedure

NO

▶ Repair air leakage and go to "Verification of Vehicle Repair" procedure

FUEL SYSTEM INSPECTION EAF0F239

1. Check the fuel for excessive water, alcohol, or other contaminants. Replace contaminated fuel as necessary.
2. Install a fuel pressure gage
3. Start engine and let it idle. Inspect fuel pressure.

Specification : 350kPa(3.50 kg/㎠,50psi)

4. Is fuel pressure within the specified value?

YES

▶ Go to next step as below

NO

▶ Repair air leakage and go to "Verification of Vehicle Repair" procedure

CHECK FOR LEAKAGE OR CLOGGING INJECTORS

1. Check the fuel injectors for clogging or any restrictions
2. Is the fuel injector OK?

YES

▶ Visually/physically inspect the following engine mechanical problem and go to "Verification of Vehicle Repair" procedure
- Leaky or sticky valves or rings
- Excessive valve deposits
- Weak valve spring
- Leaking head gasket

If NG, repair as necessary and go to "Verification of Vehicle Repair" procedure

NO

▶ Repair as necessary and go to "Verification of Vehicle Repair" procedure

VERIFICATION OF VEHICLE REPAIR E19EC9DE

Refer to DTC P2191.

FUEL DELIVERY SYSTEM

COMPONENTS LOCATION E1F8215D

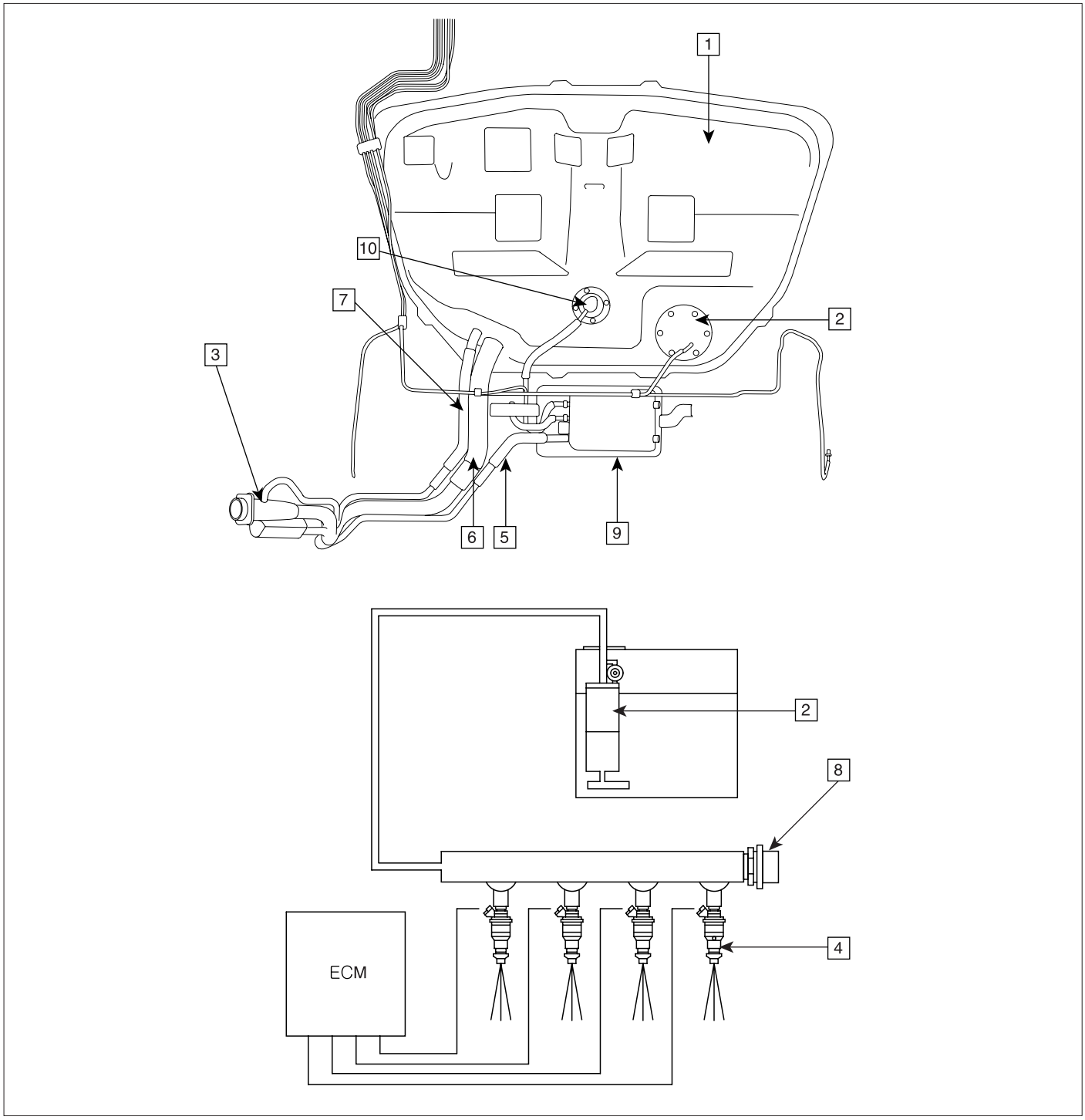

1. Fuel tank
2. Fuel pump & Gauge
3. Fuel filer neck assembly
4. Injector
5. Ventilation hose
6. Fuel filter hose
7. Fuel leveling hose
8. Fuel delivery pipe
9. Canister
10. Two way & cut valve

EFRF900A

FUEL LINE AND VAPOR LINE

FUEL PRESSURE TEST EF98290D

1. RELEASE THE INTERNAL PRESSURE

1. Disconnect the fuel pump connector(B).
2. Start the engine and wait until fuel in fuel line is exhausted.
3. After the engine stalls, turn the ignition switch to OFF position and diconnect the negative (-) terminal from the battery.

NOTE

Be sure to reduce the fuel pressure before disconnecting the fuel feed hose, otherwise fuel will spill out.

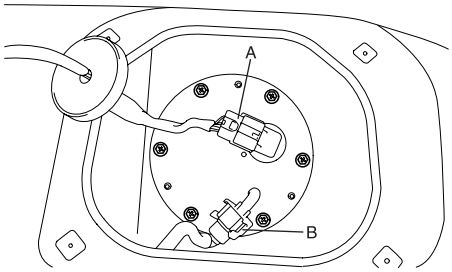

2. INSTALL THE SPECIAL SERVICE TOOL (SST) FOR MEASURING THE FUEL PRESSURE

1. Disconnect the fuel feed hose from the delivery pipe.

CAUTION

Cover the hose connection with a shop towel to prevent splashing of fuel caused by residual pressure in the fuel line.

2. Install the Fuel Pressure Gauge Adapter (09353-38000) between the delivery pipe and the fuel feed hose.
3. Connect the Fuel Pressure Gauge Connector (09353-24000) to the Fuel Pressure Gauge Adapter (09353-38000).
4. Connect the Fuel Pressure Gauge and Hose (09353-24100) to Fuel Pressure Gauge Connector (09353-24000).
5. Connect the fuel feed hose to the Fuel Pressure Gauge Adapter (09353-38000).

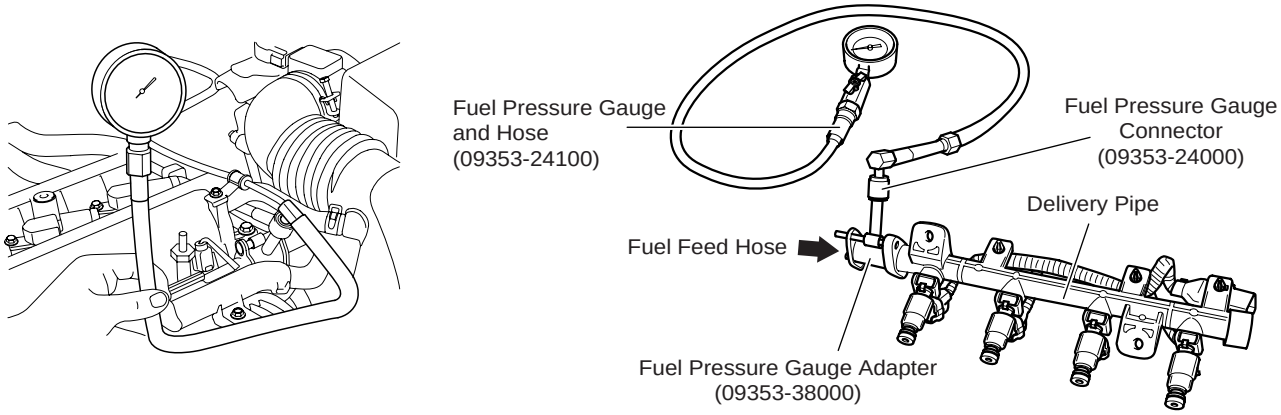

EFRF602M

3. INSPECT FUEL LEAKAGE ON CONNECTION

1. Connect the battery negative (-) terminal.
2. Apply battery voltage to the fuel pump terminal and activate the fuel pump. With fuel pressure applied, check that there is no fuel leakage from the fuel pressure gauge or connection part.

4. FUEL PRESURE TEST

1. Diconnect the negative (-) terminal from the battery.
2. Connect the fuel pump connector.
3. Connect the battery negative (-) terminal.
4. Start the engine and measure the fuel pressure at idle.

Standard Value: 350 kpa (3.5 kg/㎠, 49.8 psi)

- If the measured fuel pressure differs from the standard value, perform the necessary repairs using the table below.

Condition	Probable Cause	Suspected Area
Fuel Pressure too low	Clogged fuel filter	Fuel filter
	Fuel leak on the fuel-pressure regulator that is assembled on fuel pump because of poor seating of the fuel-pressure regulator.	Fuel Pressure Regulator
Fuel Pressure too High	Sticking fuel pressure regulator	Fuel Pressure Regulator

6. Stop the engine and check for a change in the fuel pressure gauge reading.

After engine stops, the gauge reading should hold for about 5 minutes

- Observing the declination of the fuel pressure when the gauge reading drops and perform the necessary repairs using the table below.

Condition	Probable Cause	Suspected Area
Fuel pressure drops slowly after engine is stopped	Injector leak	Injector
Fuel pressure drops immediately after engine is stopped	The check valve within the fuel pump is open	Fuel Pump

EFRF602O

5. RELEASE THE INTERNAL PRESSURE

1. Disconnect the fuel pump connector(B).
2. Start the engine and wait until fuel in fuel line is exhausted.
3. After the engine stalls, turn the ignition switch to OFF position and diconnect the negative (-) terminal from the battery.

NOTE

Be sure to reduce the fuel pressure before disconnecting the fuel feed hose, otherwise fuel will spill out.

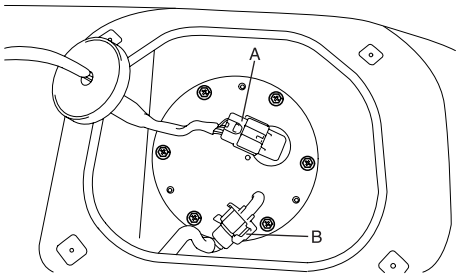

6. REMOVE THE SPECIAL SERVICE TOOL (SST) AND CONNECT THE FUEL LINE

1. Disconnect the Fuel Pressure Gauge and Hose (09353-24100) from the Fuel Pressure Gauge Connector (09353-24000).
2. Disconnect the Fuel Pressure Gauge Connector (09353-24000) from the Fuel Pressure Gauge Adapter (09353-38000).
3. Disconnect the fuel feed hose from the Fuel Pressure Gauge Adapter (09353-38000).
4. Disconnect the Fuel Pressure Gauge Adapter (09353-38000) from the delivery pipe.

CAUTION

Cover the hose connection with a shop towel to prevent splashing of fuel caused by residual pressure in the fuel line.

5. Conenct the fuel feed hose to the delivery pipe.

7. INSPECT FUEL LEAKAGE ON CONNECTION

1. Connect the battery negative (-) terminal.
2. Apply battery voltage to the fuel pump terminal and activate the fuel pump. With fuel pressure applied, check that there is no fuel leakage from the fuel pressure gauge or connection part.
3. If the vehicle is normal, connect the fuel pump connector.

EFRF602N

INJECTOR

REMOVAL EAAE2A1D

1. Release the internal pressure in fuel line to prevent splashing the fuel on working. (Refer to "FUEL PRESSURE TEST.")

   CAUTION

   To prevent to splashing the fuel because of the internal pressure in fuel line, cover the region of fuel hose connecting with the service towel.

2. Unscrew two deliver pipe mounting bolts and remove the fuel delivery pipe.

   CAUTION

   - ***Don't drop the injector to the gound removing the fuel delivery pipe.***

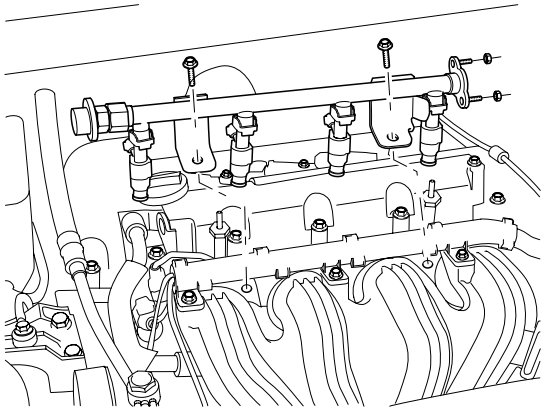

KFRE022A

3. Remove the clip(A), and then remove the injector(B).

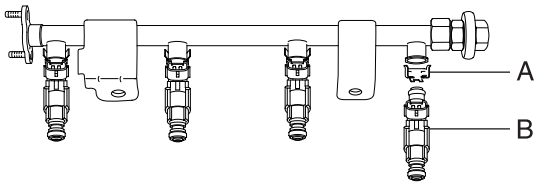

KFRE038A

INSTALLATION E725AADE

1. Set the O-rings with the injector and cover them with petrol.

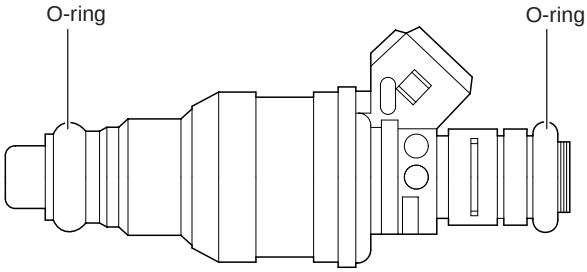

EFRF807A

2. Moving the injector left and right, assemble it with the fuel delivery pipe.

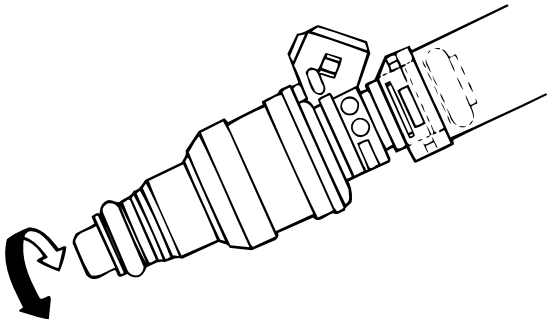

EFDA807B

3. Set the clip(A) with the injector(B).

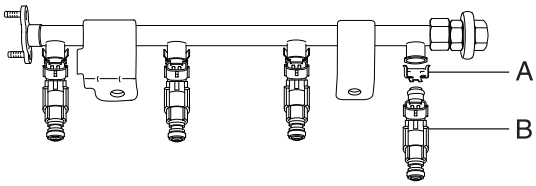

KFRE038A

4. Install the delivery pipe.

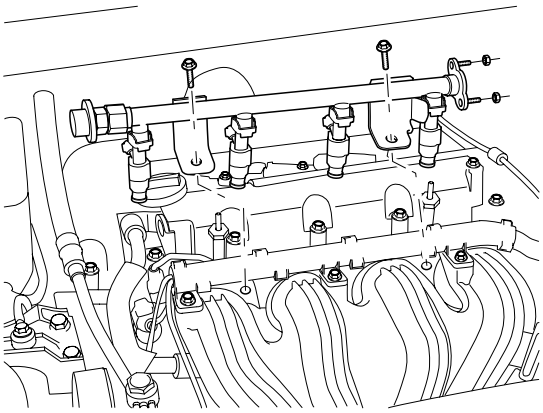

KFRE022A

INSPECTION E9475AF9

Measure resistance between the terminals 1 and 2 of injector.

Specification: 13.8 ~ 15.2(20℃(68°F))

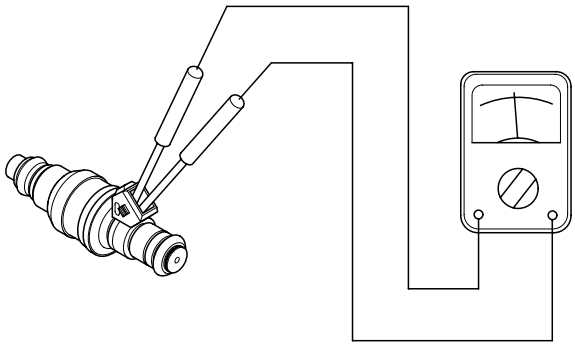

KFRE805A

FUEL FILTER

REPLACE ECADD615

1. Remove the capet covering service cover.
2. Unscrew four screws(A) and remove the service cover(B).

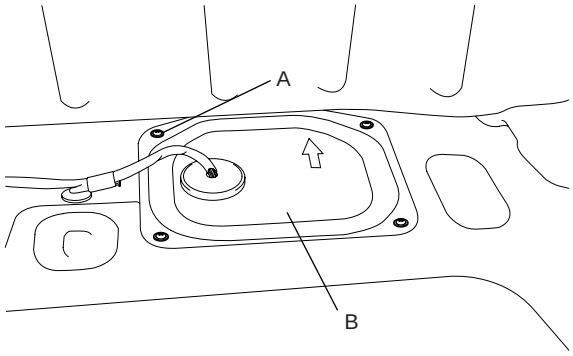

EFRF035A

3. Release the internal pressure in fuel pipe and hose as below.
   1) Diconnect the fuel pump wiring connector.
   2) Start the engine and wait until the engine stops.
4. Disconnect the fuel pump wiring connector(A) and the fuel feed hose connector(B).

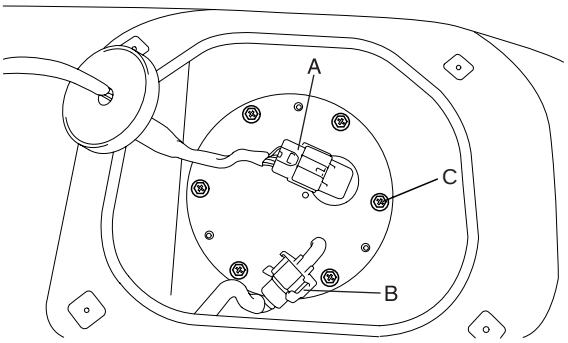

EFRF036A

5. Unscrew six fuel pump mounting bolts(C) and remove the fuel pump assembly.
6. Disassembly the fuel filter.

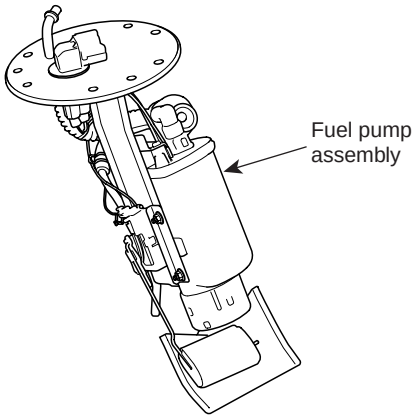

EFRF031A

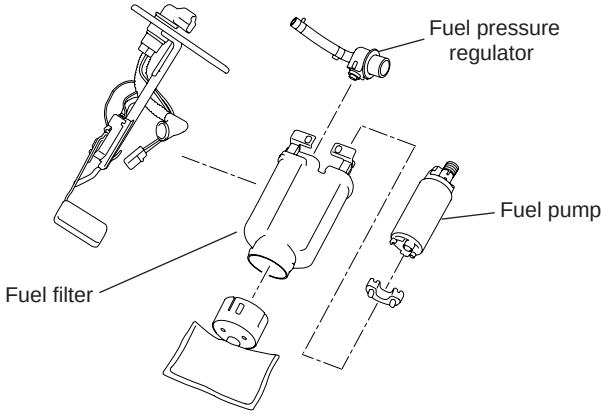

EFRF032A

7. Assemble a new fuel filter.

FUEL PUMP (FP)

REMOVAL EBE40DEB

1. Remove the capet covering service cover(B).
2. Unscrew four screws(A) and remove the service cover(B).

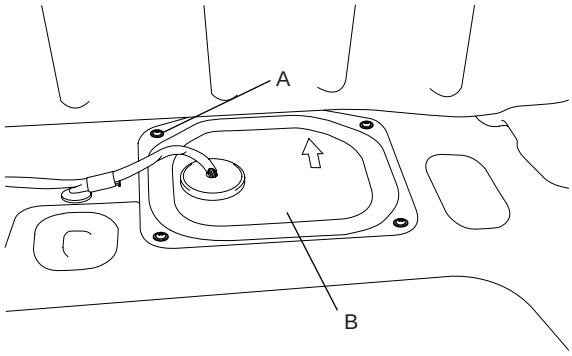

EFRF035A

3. Release the internal pressure in fuel pipe and hose as below.
   1) Diconnect the fuel pump wiring connector.
   2) Start the engine and wait until the engine stops.
4. Disconnect the fuel pump wiring connector(A) and the fuel feed hise connector(B).

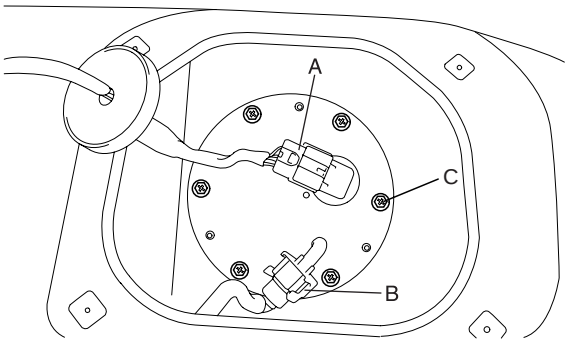

EFRF036A

5. Unscrew six fuel pump mounting bolts(C) and remove the fuel pump assembly.
6. Disassembly the fuel filter.

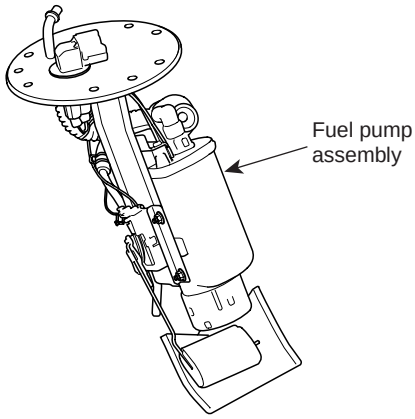

EFRF031A

INSTALLATION EA75FDA7

Installation is in reverse order of removal.

Tightening torque
Fuel pump and Gauge plate mounting bolt
0.2 ~ 0.3 kgf·m

INSPECTION ED53375B

1. Connect 12V power supply to fuel pump connector and check if the fuel pump is operated.

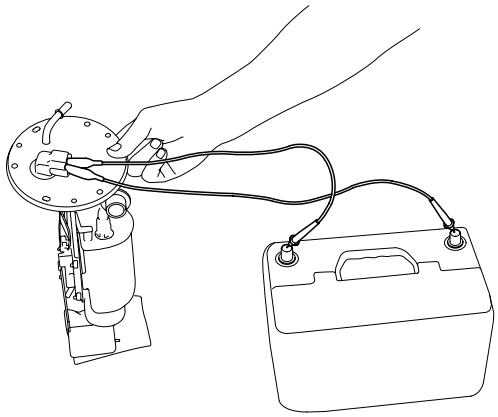

KFRE033A

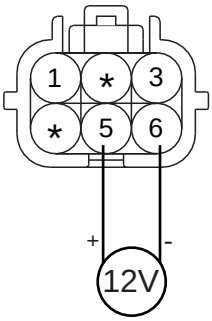

KFRE033B

CAUTION

Cover the fuel line nipple with a shop towel not to splash fuel remained in the fuel filter.

2. Unless the fuel pump is not operated, replace it with a new one.

FUEL TANK

REMOVAL EDFB76F1

1. Remove the capet covering service cover(B).
2. Unscrew four screws(A) and remove the service cover(B).

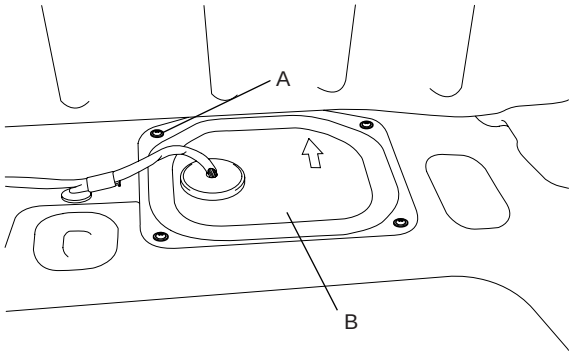

EFRF035A

3. Release the internal pressure in fuel pipe and hose as below.
   1) Disconnect the fuel pump wiring connector.
   2) Start the engine and wait until the engine stops.
4. Lift up the vehicle.
5. Disconnect the center muffler from the main muffler. (Refer to "EM" group)
6. Support the fuel tank with jack.

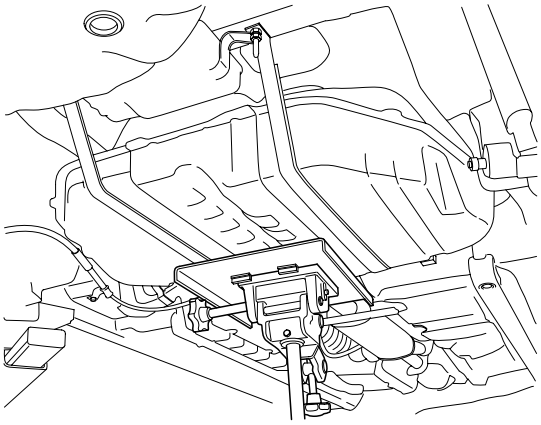

KFRE029A

7. Unfasten two mounting nuts(A) and droop two fuel tank bands.

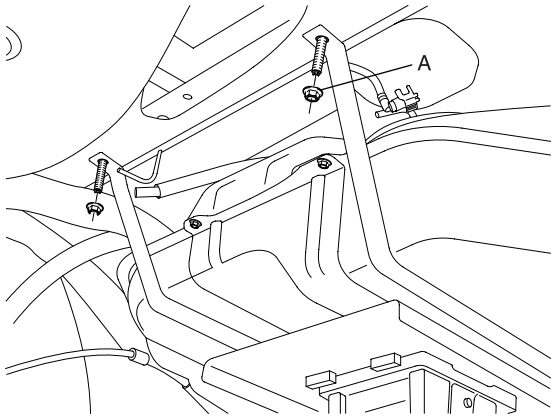

KFRE027A

8. Lifting down fuel tank slowly, remove it from the vehicle.

INSTALLATION

Installation is in reverse order of removal.

Tightening torque
Fuel tank band : 4.0 ~ 5.5kgf·m