Restraints

GENERAL

SUPPLEMENTAL RESTRAINTS SYSTEM CONTROL MODULE(SRSCM)
SRS CONTROL MODULE

AIR BAG MODULE (DRIVE SIDE)
AIR BAG MODULE AND CLOCK SPRING

AIR BAG MODULE (PASSENGER SIDE)
AIR BAG MODULE

AIR BAG MODULE (SIDE AIR BAG)
AIR BAG MODULE

AIR BAG MODULE (CURTAIN AIR BAG)

SEAT BELT PRETENSIONER
SEAT BELT PRETENSIONER

SRS CONTROL SYSTEM
FRONT IMPACT SENSOR (FIS)
SIDE IMPACT SENSOR (SIS)

TROUBLESHOOTING

AIR BAG MODULE DISPOSAL

GENERAL

GENERAL E58FABD8

The supplemental restraint system (SRS) is designed to supplement the seat belt to help reduce the risk or severity of injury to the driver and passenger by activating and deploying the driver, passenger, side airbag and belt pre-tensioner in certain frontal or side collisions.
The SRS (Airbag) consists of : a driver side airbag module located in the center of the steering wheel, which contains the folded cushion and an inflator unit ; a passenger side airbag module located in the passenger side crash pad contains the folded cushion assembled with inflator unit ; Side airbag modules located in the driver and passenger seat contain the folded cushion and an inflator unit. Curtain airbag modules located inside of the headliner which contains folded cushions and inflator units.
SRSCM located on the floor under the heater core which monitors the system, an accelerometer which senses the vehicle deceleration, a spring interconnection (clock spring) located within the steering column ; system wiring and wiring connector; and a knee bolster located under the steering column. The impact sensing function of the SRSCM is carried out by electronic accelerometer that continuously measure the vehicle's acceleration and delivers a corresponding signal through amplifying and filtering circuity to the microprocessor.

SRSCM (SRS CONTROL MODULE)

The SRS airbag system consists of electrical and electronic. Be cautious in the airbag parts.
SRSCM will detect front impact with inside sensor, and side impact with side impact sensor, detect airbag deployment request signal, and determine airbag module deployment.

1. DC/DC converter: DC/DC converter in power supply unit includes up/down transformer converter, and provide ignition voltage for 2 front airbag ignition circuits and inside operation voltage. If inside operation voltage is below critical value setting, it will perform re-setting.

2. Safety sensor: Safety sensor is located in airbag ignition circuit. Safety sensor will operate airbag circuit at any deployment condition and release airbag circuit safely at normal driving condition. Safety sensor is a double contact electro-mechanical switch that will close detecting deceleration above certain criteria.

3. Back up power supply: SRSCM has separate back up power supply, that will supply deployment energy instantly in low voltage condition or upon power failure by front crash.

4. Self diagnosis: SRSCM will constantly monitor current SRS operation status and detect system failure during vehicle power supply is on, system failure may be checked with trouble codes using scan too. (Hi-Scan)

5. Airbag warning lamp on: Upon detecting error, the module will transmit signal to SRSCM indicator lamp located at cluster. MIL lamp will indicate driver SRS error. Upon ignition key on, SRS lamp will be turned on about 6 seconds, then will be turned off.

6. Trouble code registration: Upon error occurrence in system, SRSCM will store DTC corresponding to the error. DTC can be cleared only by Hi-Scan.

7. Self diagnostic connector: Data stored in SRSCM memory will be output to Hi-Scan or other external output devices through connector located below driver seat crash pad.

8. Once airbag is deployed, SRSCM should not be used again but replaced.

9. SRSCM will determine whether passenger has put on seat belt using built-in switch signal in seat belt buckle, and deploy front seat airbag at each set crash speed.

10. Side airbag deployment will be determined by SRSCM that will detect satellite sensor impact signal upon side crash, irrespective to seat belt condition.

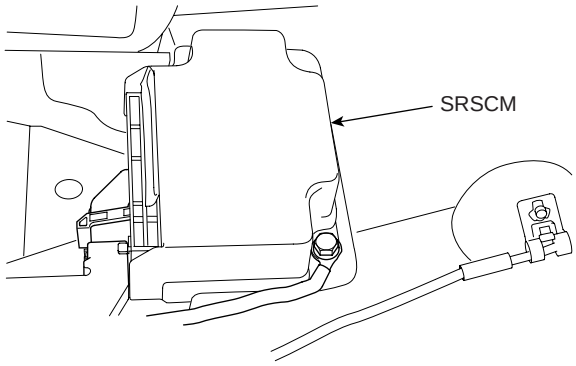

ERRF501O

SPECIFICATION EC4EF959

Item	Specification	
Driver Airbag (DAB)	Resistance(Ω)	1.92~3.074 Ω
Passenger Airbag(PAB)	Resistance(Ω)	1.878~2.442 Ω
Driver Side Airbag(DSAB)	Resistance(Ω)	1.804~2.568 Ω
Passenger Side Airbag(PSAB)	Resistance(Ω)	1.812~2.576 Ω
Driver Curtain Airbag(DCAB)	Resistance(Ω)	1.940~2.704 Ω
Passenger Curtain Airbag(PCAB)	Resistance(Ω)	1.948~2.712 Ω
Seat Belt Pretensioner (BPT)	Resistance(Ω)	1.943~2.806 Ω
Buckle Pretensioner (BUPT)	Resistance(Ω)	1.905~2.769 Ω

TIGHTENING TORQUES E19DE97D

Item	kgf·m	Nm	lb-ft
Driver Airbag (DAB)	0.8~1.1	7.84~10.79	5.79~7.96
Passenger Airbag(PAB)	0.8~1.1	7.84~10.79	5.79~7.96
Curtain Airbag(CAB)	1.1~1.5	10.79~14.71	7.96~10.85
Seat Belt Lower Anchor Bolt (BPT)	4~5.5	39.23~53.94	28.93~39.78
SRSCM Mounting Bolt	0.97~1.39	9.5~13.6	7.0~10.03
Front Impact Sensor (FIS) Mounting Bolt	0.97~1.39	9.5~13.6	7.0~10.03
Side Impact Sensor (SIS) Mounting Bolt	0.97~1.39	9.5~13.6	7.0~10.03

SPECIAL SERVICE TOOLS E79618D5

Tool(Number and Name)	Illustration	Use
Deployment tool 0957A-34100A	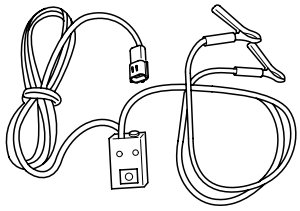 ARIE500A	Airbag deployment tool
Deployment adapter 0957A-38100	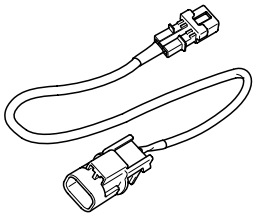 ARIE500B	Use with deployment tool.(PAB, SAB)
Deployment adapter 0957A-38500	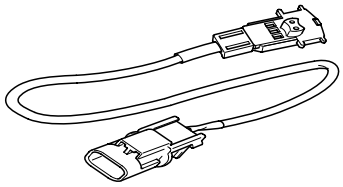 ARIE500C	Use with deployment tool.(DAB, CAB, BPT)
Deployment adapter 0957A-2E210	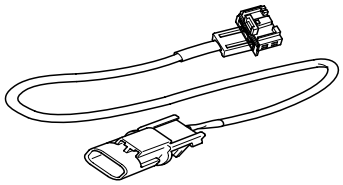 ARIE501B	Use with deployment tool.(BUPT)
Dummy 0957A-38200	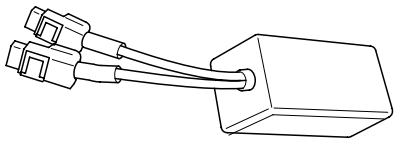 ARIE500D	Simulator to check the resistance of each wiring harness

Tool(Number and Name)	Illustration	Use
Dummy adapter 0957A-38300	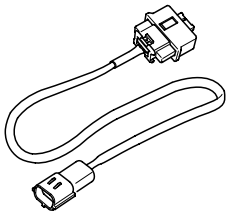 ARIE500E	Use with dummy(PAB, SAB)
Dummy adapter 0957A-1C000	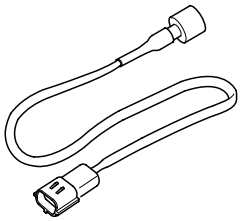 ARIE500F	Use with dummy(DAB, CAB, BPT)
Dummy adapter 0957A-2E200	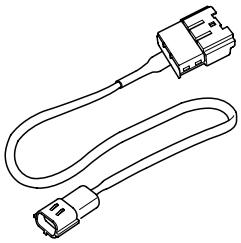 ARIE501C	Use with dummy(BUPT)

DAB : Driver Airbag
PAB : Passenger Airbag
SAB : Side Airbag
CAB : Curtain Airbag
BPT : Belt Pretensioner
BUPT: Buckle Pretensioner

PRECAUTIONS E0B8BC3E

GENERAL PRECAUTIONS

Please read the following precautions carefully before performing the airbag system service. Observe the instructions described in this manual, or the airbags could accidentally deploy and cause damage or injuries.

- Except when performing electrical inspections, always turn the ignition switch OFF and disconnect the negative cable from the battery, and wait at least three minutes before beginning work.

  NOTE

  The contents in the memory is not erased even if the ignition switch is turned OFF or the battery cables are disconnectedfrom the battery.

- Use the replacement parts which are manufactured to the same standards as the original parts and quality. Do not install used SRS parts from another vehicle. Use only new parts when making SRS repairs.
- Carefully inspect any SRS part before you install it. Do not install any part that shows signs of being dropped or improperly handled, such as dents, cracks or deformation.

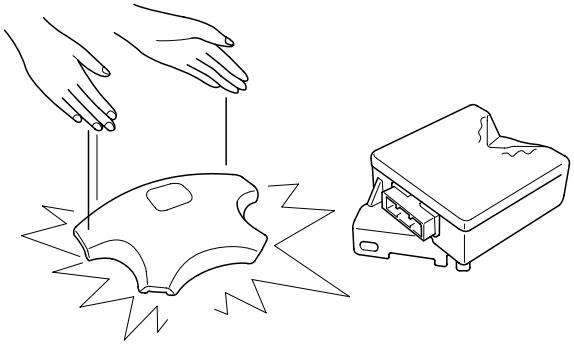

ERKD002V

- Before removing any of the SRS parts (including the disconnection of the connectors), always disconnect the SRS connector.

AIRBAG HANDLING AND STORAGE

Do not disassemble the airbags; it has no serviceable parts. Once an airbag has been deployed, it cannot be repaired or reused.

For temporary storage of the air bag during service, please observe the following precautions.

- Store the removed airbag with the pad surface up.
- Keep free from any oil, grease, detergent, or water to prevent damage to the airbag assembly.

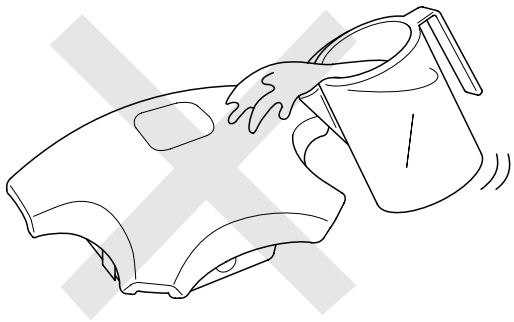

ERKD002Z

- Store the removed airbag on secure, flat surface away from f high heat source (exceeding 200°F / 93°C).
- Never perform electrical inspections to the airbags, such as measuring resistance.
- Do not position yourself in front of the airbag assembly during removal, inspection, or replacement.
- Refer to the scrapping procedures for disposal of the damaged airbag.
- Be careful not to bump or impact the SRS unit or the side impact sensors whenever the ignition switch is ON, wait at least three minutes after the ignition switch is turned OFF before begin work.
- During installation or replacement, be careful not to bump (by impact wrench, hammer, etc.) the area around the SRS unit and the side impact sensor. The airbags could accidentally deploy and cause damage or injury.
- After a collision in which the airbags were deployed, replace the front airbags and the SRS unit. After a collision in which the side airbag was deployed, replace the side airbag, the front impact sensor and side impact sensor on the side where the side airbag deployed and the SRS unit. After a collision in which the airbags or the side air bags did not deploy, inspect for any damage or any deformation on the SRS unit and

the side impact sensors. If there is any damage, replace the SRS unit, the front impact sensor and/or the side impact sensors.
- Do not disassemble the SRS unit, the front impact sensor or the side impact sensors
- Turn the ignition switch OFF, disconnect the battery negative cable and wait at least three minutes before beginning installation or replacement of the SRS unit.
- Be sure the SRS unit, the front impact sensor and side impact sensors are installed securely with the mounting bolts.
- Do not spill water or oil on the SRS unit,or the front impact sensor or the side impact sensors and keep them away from dust.
- Store the SRS unit, the front impact sensor and the side impact sensors in a cool (less than 104°F/40°C) and dry (less than 80% relative humidity, no moisture) area.

WIRING PRECAUTIONS

SRS wiring can be identified by special yellow outer covering (except the SRS circuits under the front seats).
Observe the instructions described in this section.
- Never attempt to modify, splice, or repair SRS wiring. If there is an open or damage in SRS wiring, replace the harness.

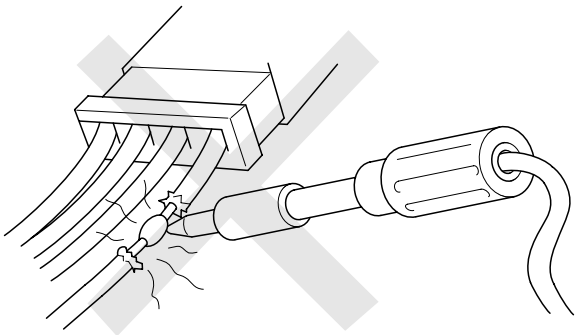

ERKD002Y

- Be sure to install the harness wires so that they are not pinched, or interfere with other parts.

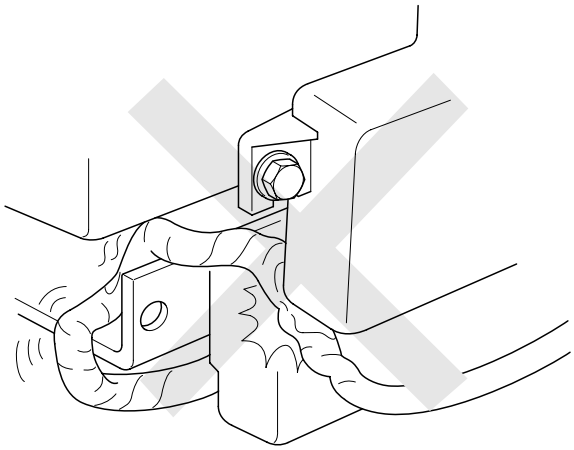

ERKD002X

- Make sure all SRS ground locations are clean, and grounds are securely fastened for optimum metal-to-metal contact. Poor grounding can cause intermittent problems that are difficult to diagnose.

PRECAUTIONS FOR ELECTRICAL INSPECTIONS

- When using electrical test equipment, insert the probe of the tester into the wire side of the connector.
  Do not insert the probe of the tester into the terminal side of the connector, and do not tamper with the connector.

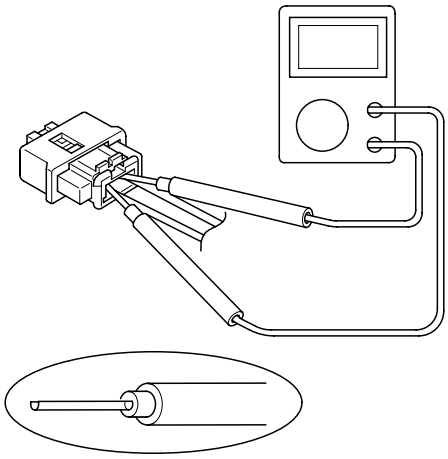

ERKD002W

- Use a u-shaped probe. Do not insert the probe forcibly.

- Use specificed service connectors for troubleshooting.
  Using improper tools could cause an error in inspection due to poor metal contact.

SPRING-LOADED LOCK CONNECTOR

Some SRS system connectors have a spring-loaded lock.

AIRBAG CONNECTOR(I)

DISCONNECTING

To release the lock, pull the spring-loaded sleeve (A) toward the stop (B) while holding the opposite half of the connector. Then pull the connector halves apart. Be sure to pull on the sleeve and not on the connector half.

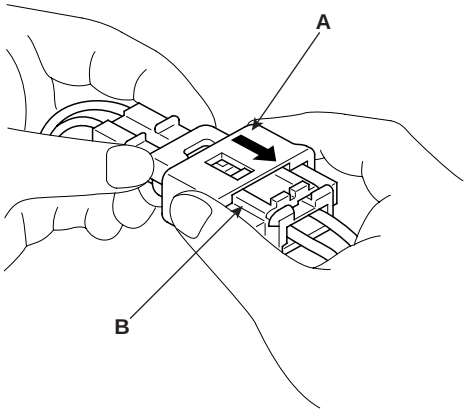

ERKD511A

CONNECTING

1. To reconnect, hold the pawl-side connector half, and press on the back of the sleeve-side connector half in the direction shown. As the two connectpr halves are pressed together, the sleeve (A) is pushed back by the pawl (B). Do not touch the sleeve.

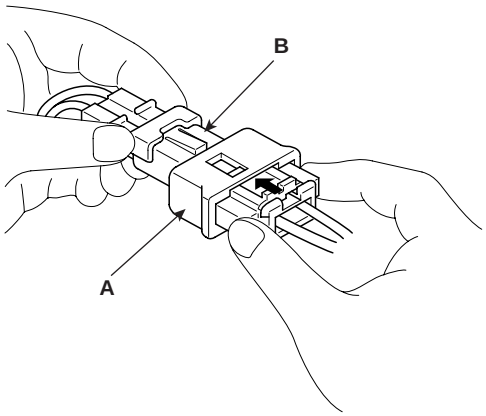

ERRF501P

2. When the connector halves are completely connected, the pawl is released, and the spring-loaded sleeve locks the connector.

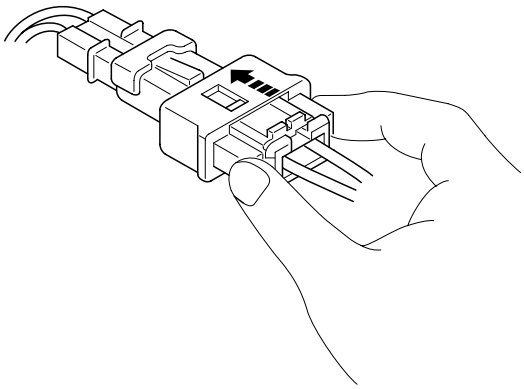

ERKD511C

AIRBAG CONNECTOR(II)

DISCONNECTING

To release the lock, pull the spring-loaded sleeve (A) witile pressing the slider (B), while holding the opposite half of the connector. Pull the connector halves apart. Be sure to pull on the sleeve and not on the connector half.

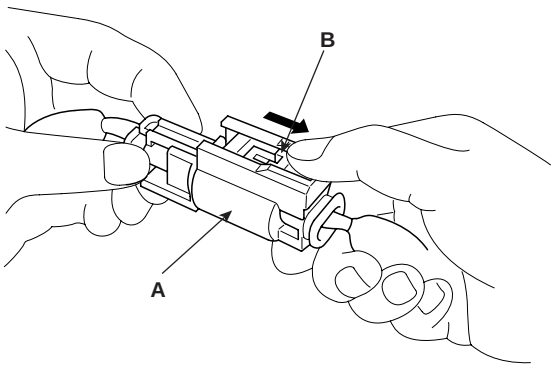

ERKD511D

CONNECTING

Hold both connector halves and press firmly until the projection (C) of the sleeve-side connector clicks to lock.

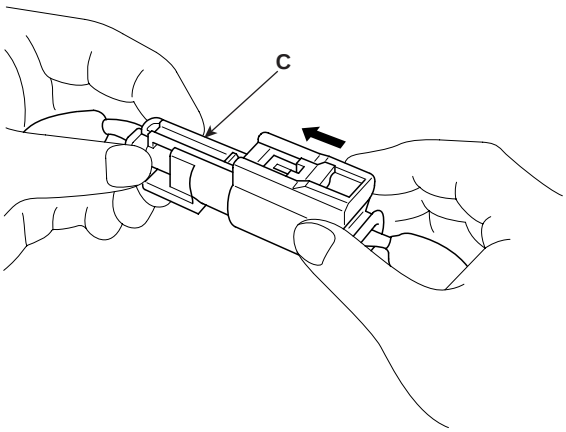

ERKD511E

WARNING LAMP ACTIVATION E0B8BC3E

1. active fault or more than 10 faults are memorized
   a. warning lamp turns on continuously after IG ON.
   b. warning lamp turns off for 1 second.
   c. warning lamp turns on continuously.

LRIF500A

2. No current fault or Less than 10 faults are memorized
   a. warning lamp turns on continuously after IG ON.
   b. warning lamp turns off continuously.

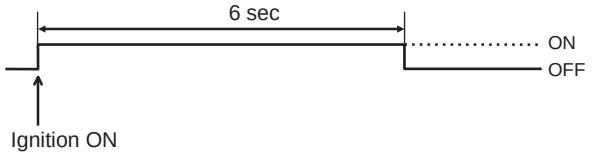

LRIF500B

3. A failure recognition time table

	Active fault	Historical fault
internal fault	2sec.	4sec.
external fault	2sec.	4sec.
battery voltage high/low	10sec.	10sec.

PASSENGER RESTRAINTS ACTIVATION WITH PAD SWITCH

The PAD switch affects the activation of the Front Passenger Airbag only. The PAD switch shall be interpreted as follows:

PAD Switch status	PAD Lamp	PAB
Phase-up	ON → OFF	Default
Enabled position	OFF	Enable
Disabled position	ON	Disable
Fault	Based on PAB	Default

PASSENGER AIRBAG DISABLE (PAD) LAMP ACTIVATION

The ACU shall be designed with circuitry and software to drive a PAD lamp. PAD lamp will be used for depowered systems. For the PAD indicator circuitry to function properly both the ACU and PAD Indicator shall be sourced from the same ignition line. During phase-up, the PAD indicator shall be commanded ON for 4 seconds and OFF for 3 second. Thereafter, the lamp shall be commanded ON as long as either of the following condition exists:

- PAD switch is in the disable position.

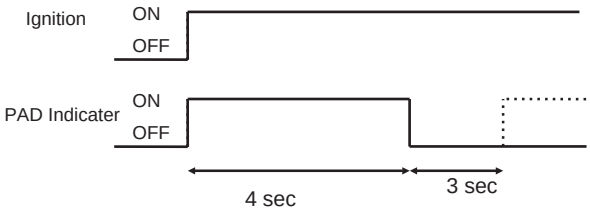

ERRF501U

(PAD Lamp operation during phase-up)

COMPONENTS E2BBC76E

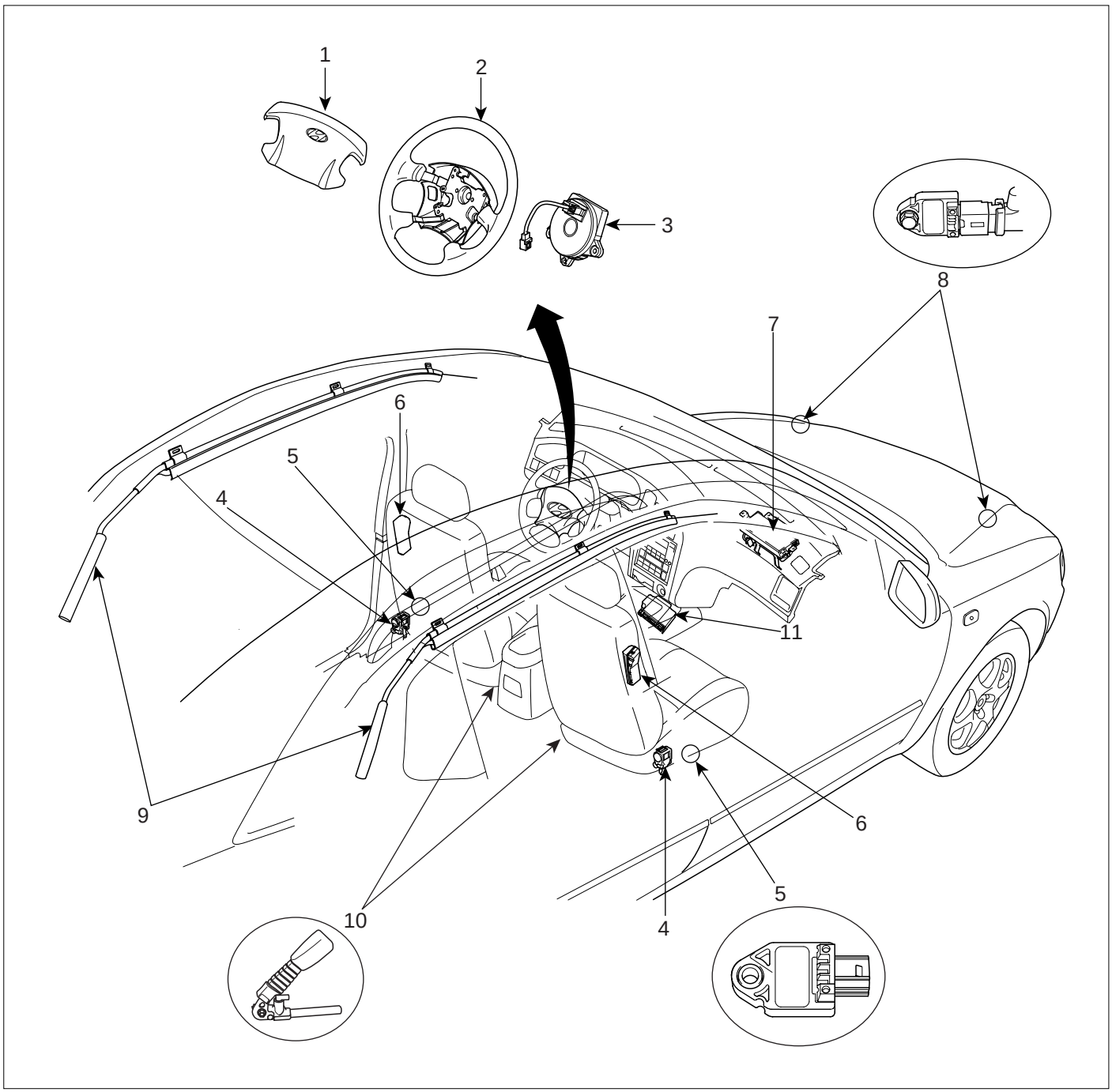

1. Driver Airbag (DAB)
2. Steering Wheel
3. Clock Spring
4. Seat Belt Pretensioner (BPT)
5. Side Impact Sensor (SIS)
6. Side Airbag (SAB)
7. Passenger Airbag (PAB)
8. Front Impact Sensor (FIS)
9. Curtain Airbag (CAB)
10. Buckle Pretensioner (BUPT)
11. Airbag Control Module (SRSCM)

ERRF500A

COMPONENTS LOCATION

DRIVER AIRBAG(DAB)/PASSENGER AIRBAG(PAB)

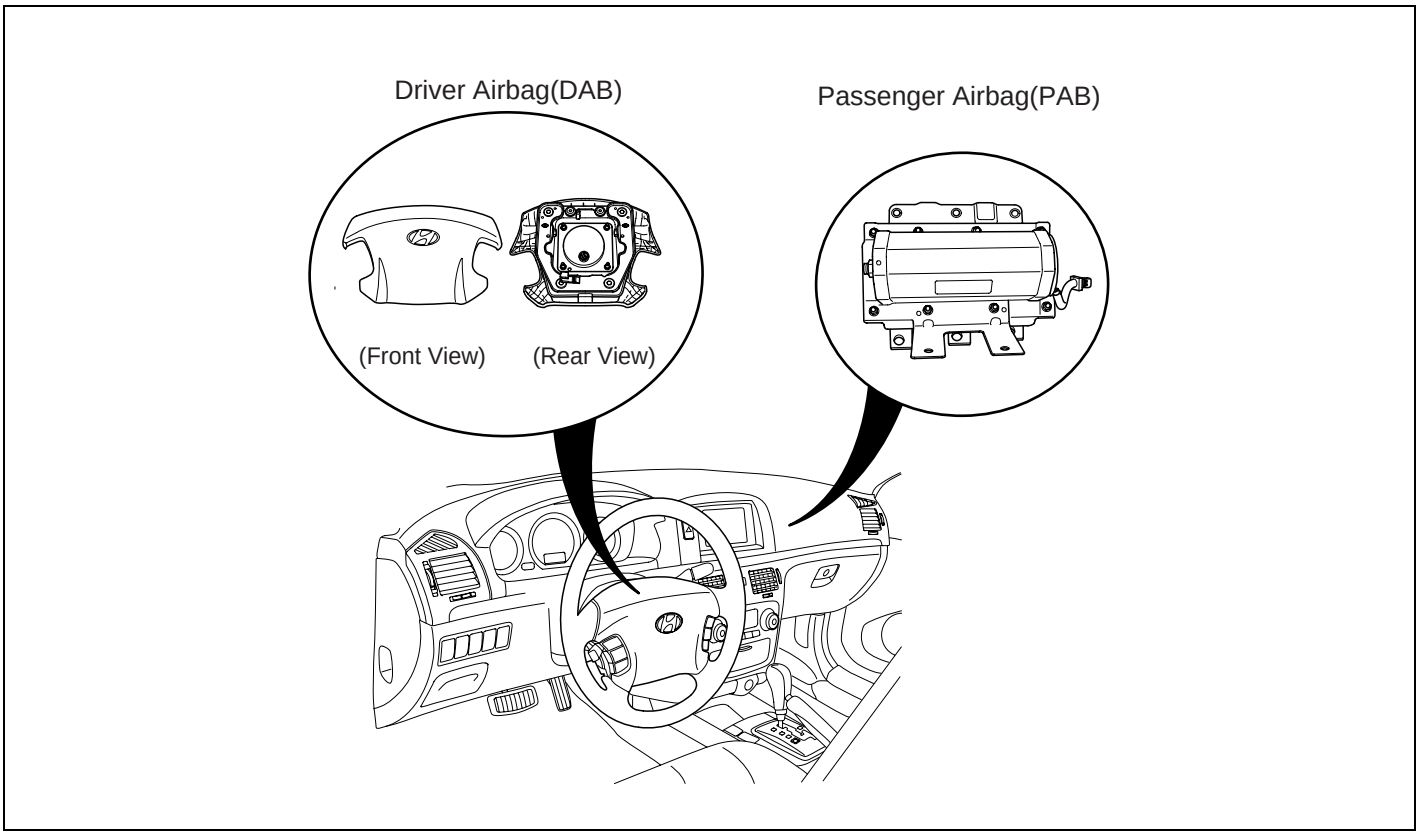

ERRF500B

SIDE AIRBAG (SAB)

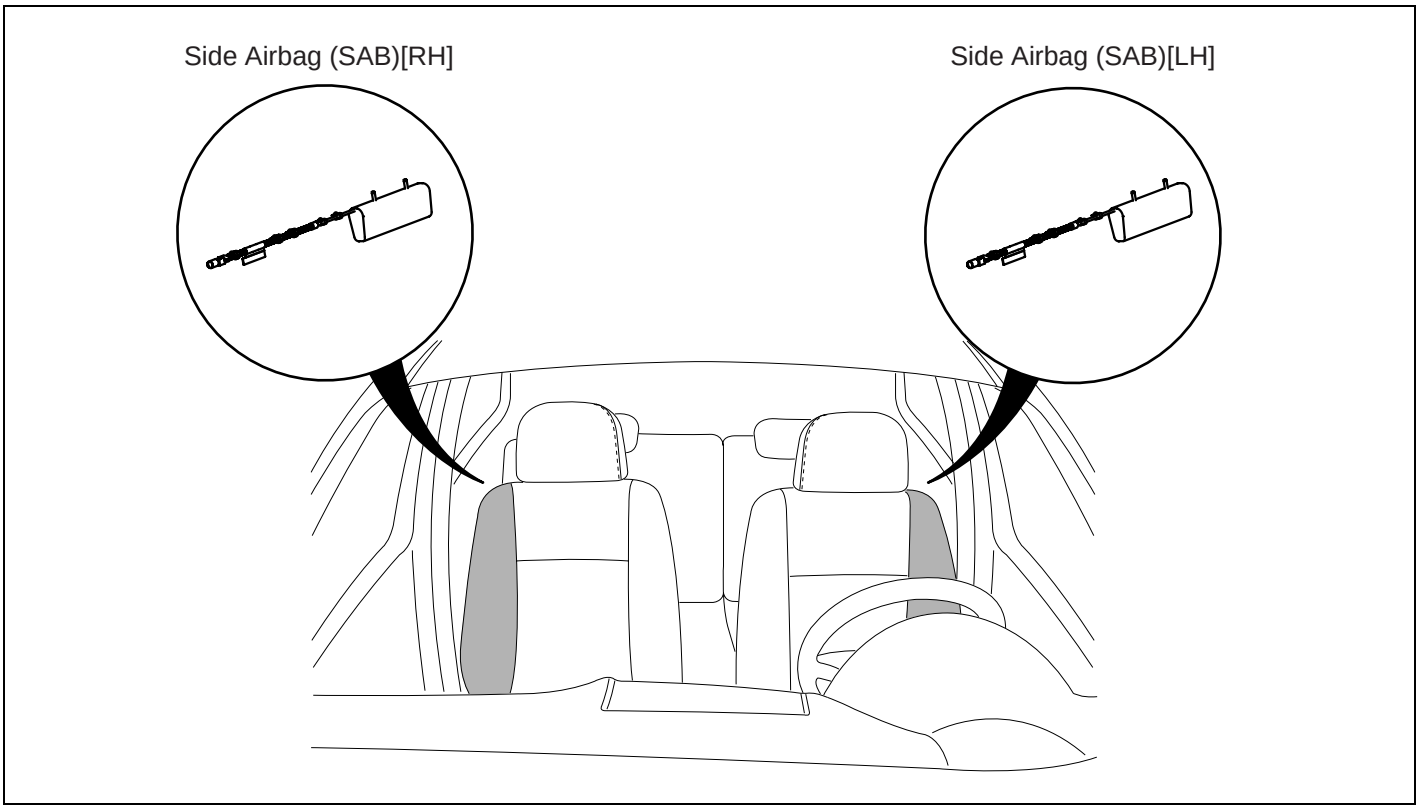

ERRF500C

FRONT IMPACT SENSOR(FIS)

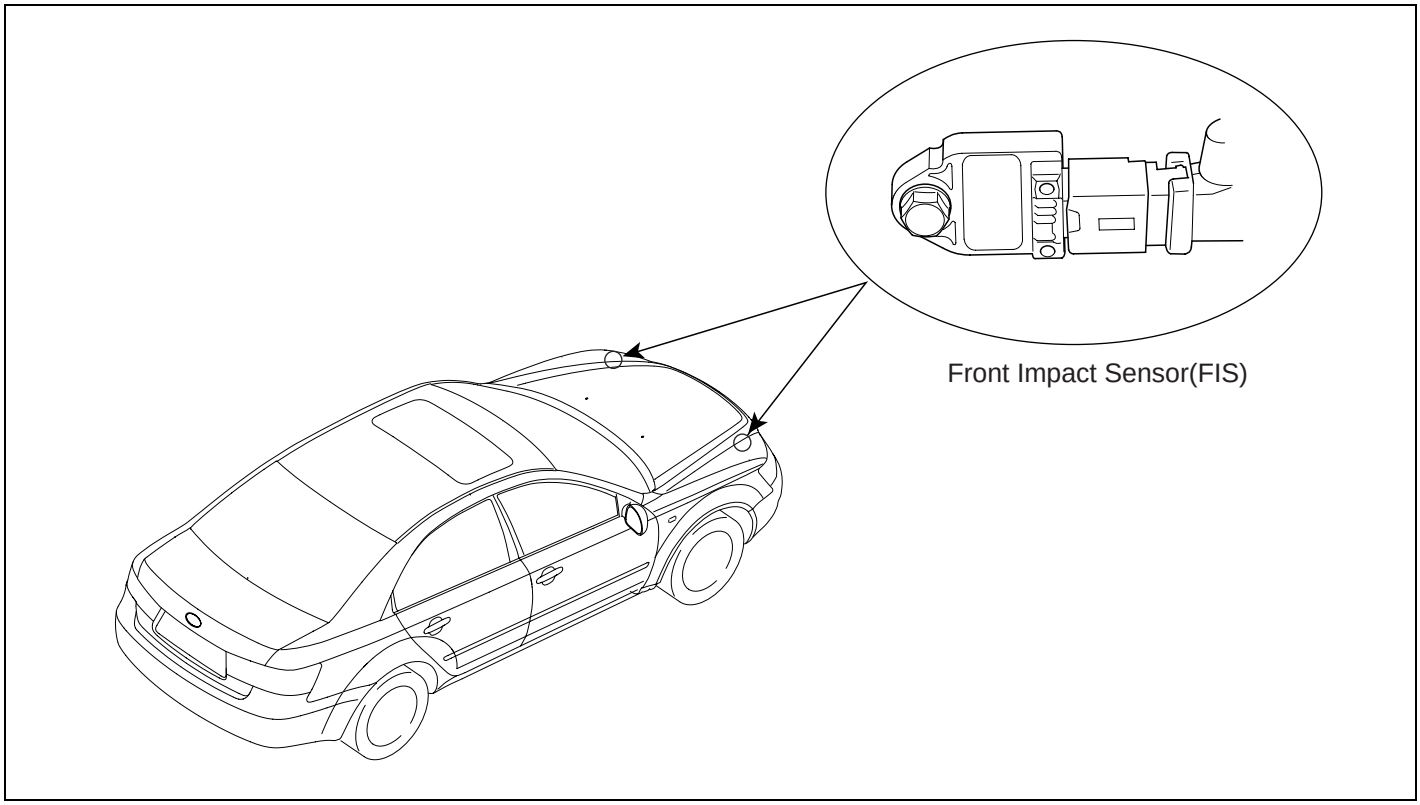

ERRF500D

SEAT BELT PRETENSIONER(BPT) / SIDE IMPACT SENSOR(SIS)

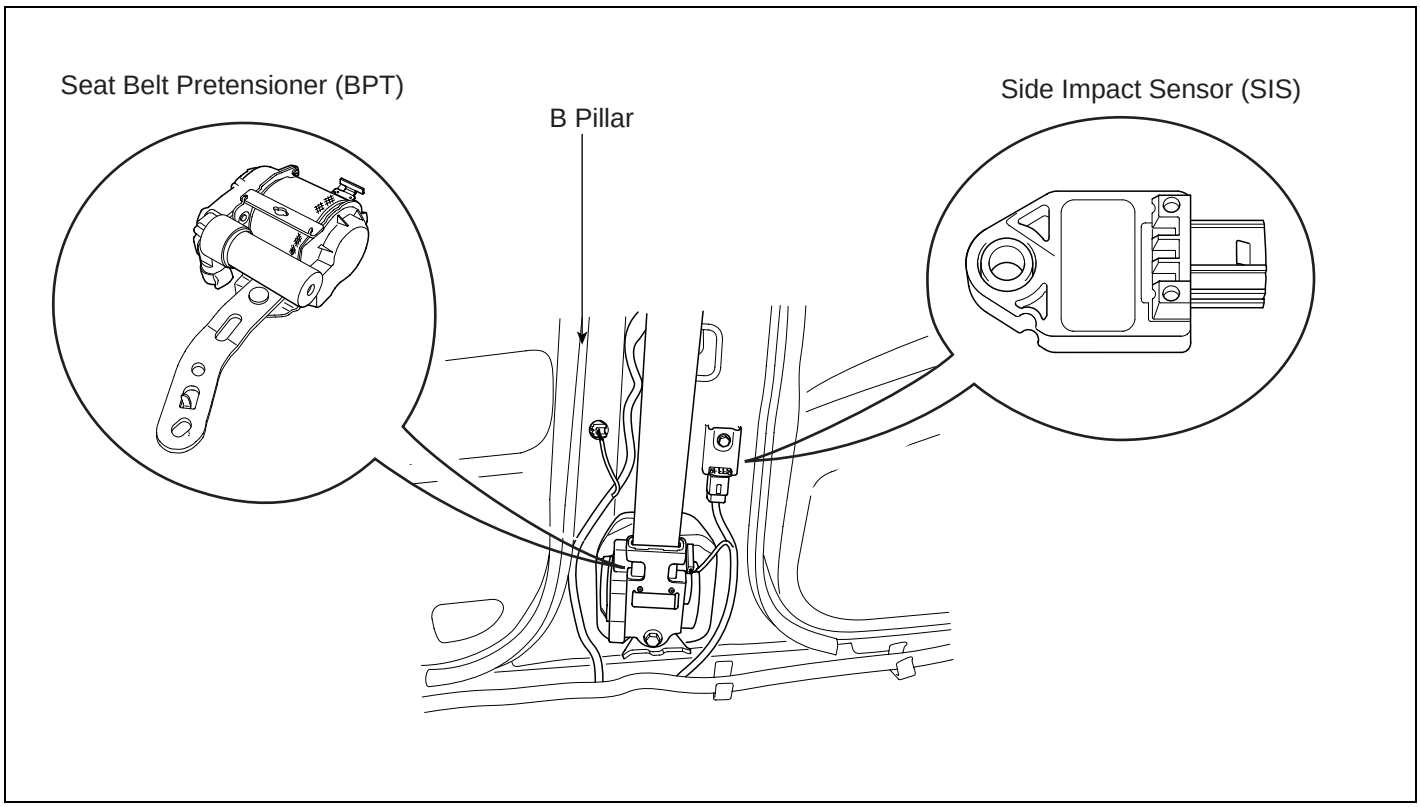

ERRF500E

SRSCM

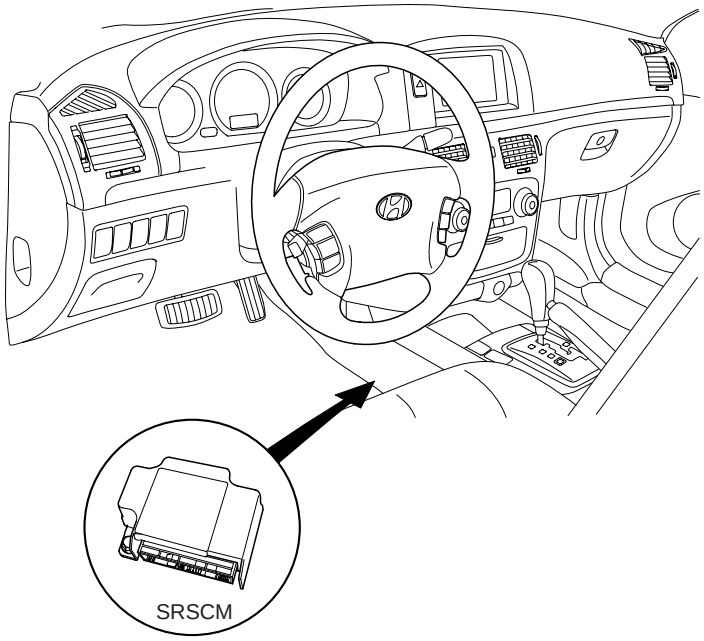

KRRE110C

SUPPLEMENTAL RESTRAINTS SYSTEM CONTROL MODULE(SRSCM)

SRS CONTROL MODULE

DESCRIPTION EB0B2460

The primary purpose of the SRSCM (Supplemental Restraints System Control Module) is to discriminate between an event that warrants restraint system deployment and an event that does not. The SRSCM must decide whether to deploy the restrain system or not. After determining that pretensioners and/or airbag deployment is required, the SRSCM must supply sufficient power to the pretensioners and airbag igniters to initiate deployment. The SRSCM determines that an impact may require deployment of the pretensioners and airbags from data obtained from impact sensors and other components in conjunction with a safing function. The SRSCM will not be ready to detect a crash or to activate the restraint system devices until the signals in the SRSCM circuitry stabilize. It is possible that the SRSCM could activate the safety restraint devices in approximately 2 seconds but is guaranteed to fully function after prove-out is completed. The SRSCM must perform a diagnostic routine and light a system readiness indicator at key-on. The system must perform a continuous diagnostic routine and provide fault annunciation through a warning lamp indicator in the event of fault detection. A serial diagnostic communication interface will be used to facilitate servicing of the restraint control system.

COMPONENTS

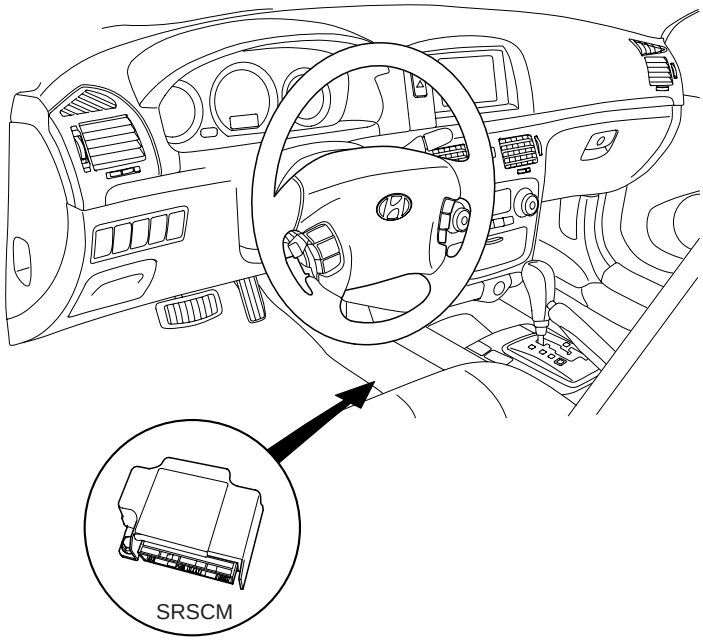

KRRE110C

REMOVAL E6FCE4C2

1. Disconnect the negative(-) cable from battery and wait for at least 3 minutes.

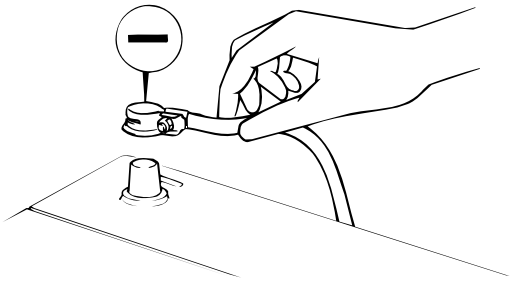

ARCD512A

2. Remove ignition key from the vehicle.

3. Remove the center console.(Refer to "BD" group in this Workshop Manual).

4. Pull back the lever, then disconnect the SRSCM harness connector(A). Loosen the bolt(B), then remove the SRSCM(C).

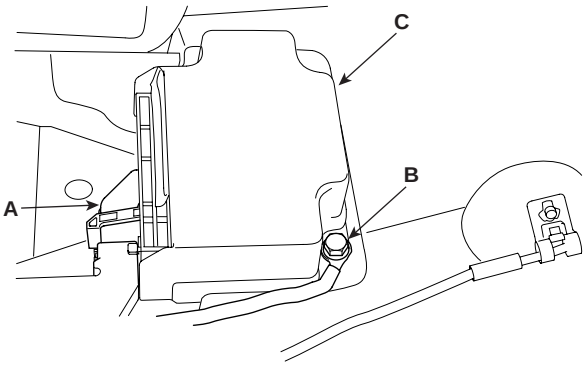

KRRE500O

SRSCM mounting bolt : 0.97~1.39 kgf.m(9.5 ~ 13.6 Nm, 7.0 ~ 10.03 lb.ft)

5. Installation is the reverse of removal.

NOTE

Turn the ignition switch ON; the SRS indicator light should turn on about six seconds and then go off.

AIR BAG MODULE (DRIVE SIDE)

AIR BAG MODULE AND CLOCK SPRING

DESCRIPTION EB39817E

Driver Airbag (DAB) is installed in steering wheel and electrically connected to SRSCM via clockspring. It protects the driver from danger with deploying a bag when frontal crash occurs. The SRSCM determines deployment of Driver Airbag (DAB).

CAUTION

Never attempt to measure the circuit resistance of the airbag module (squib) even if you are using the specified tester. If the circuit resistance is measured with a tester, accidental airbag deployment will result in serious personal injury.

COMPONENTS EB7B905A

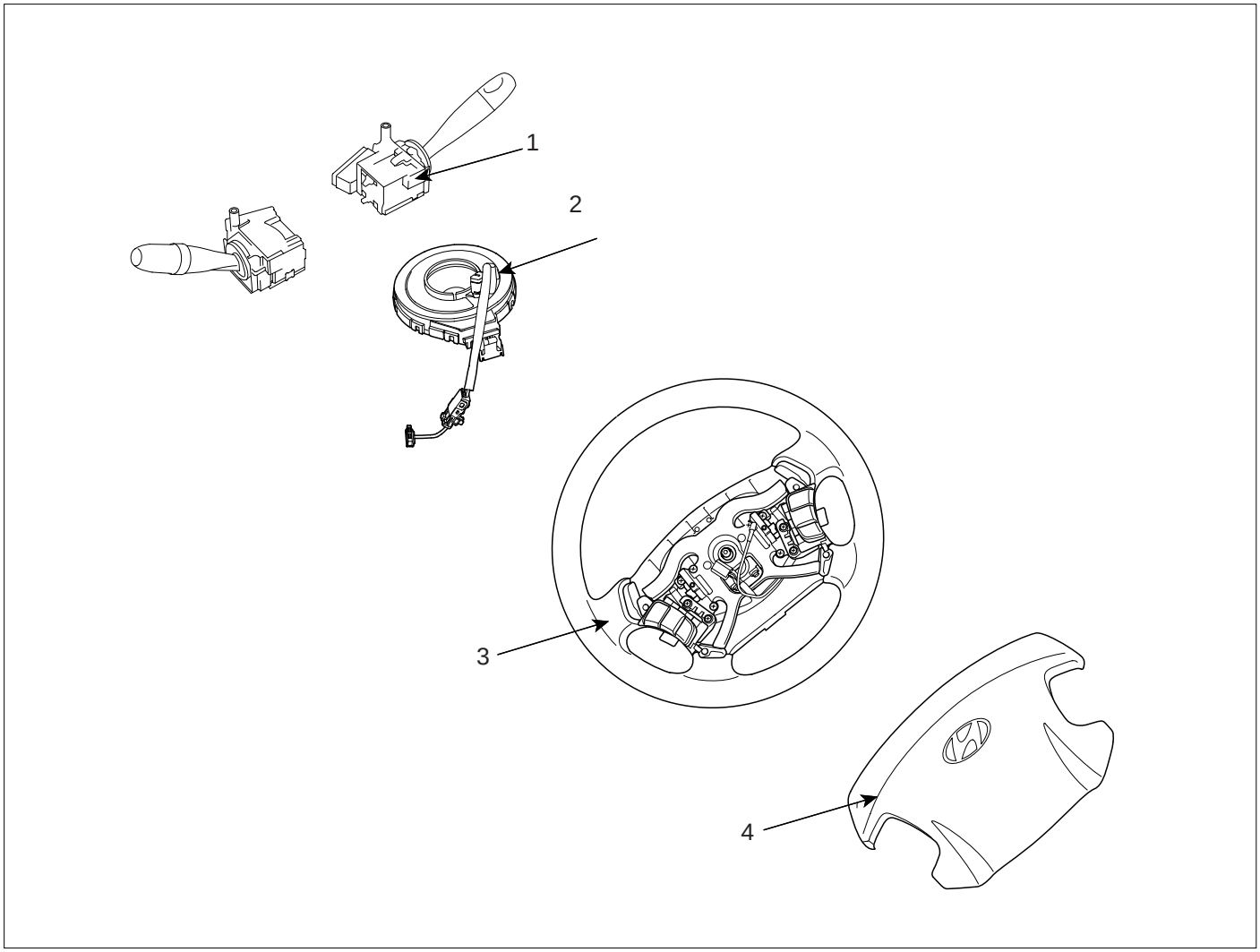

1. Multi-Function Switch
2. Clock Spring
3. Steering Wheel
4. Driver Airbag (DAB)

ERRF500F

REMOVAL EA6351AF

DAB REMOVAL

1. Disconnect the battery negative cable and wait at least three minutes before beginning work.

2. After remove the cover (A), then loosen the two Torx bolt (B).

NOTE

- *Use the magnetic tool, because bolts are not seperated completely.*

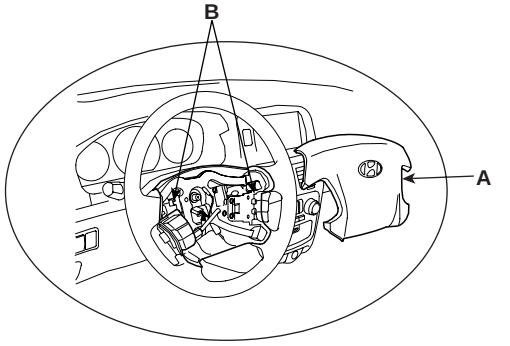

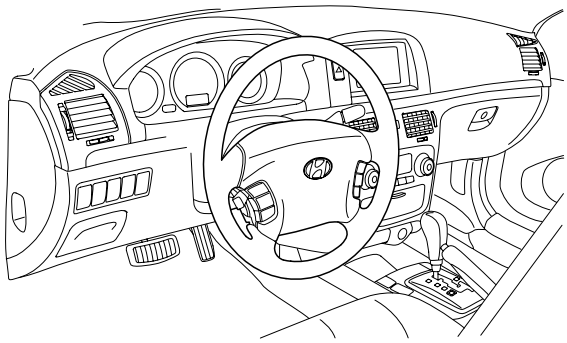

KRRE500P

3. Disconnect the connector(A) and the pin(B). Remove the driver's airbag(C) from the steering wheel.

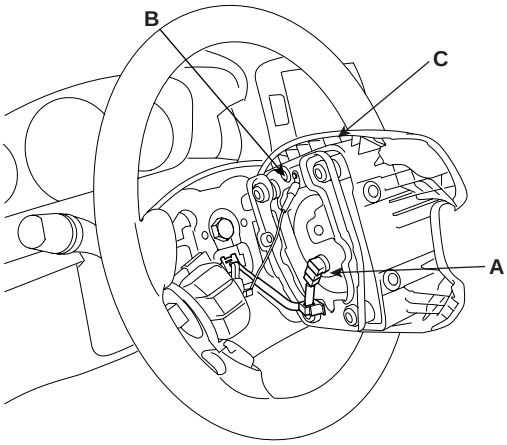

ERRF501Q

CAUTION

The removed airbag module should be stored in a clean and dry place with the pad cover face up.

CLOCK SPRING REMOVAL

1. Disconnect the negative battery cable, and wait at least 3 minutes before beginning work.

2. Remove the DAB.

3. Remove the steering wheel (Refer to ST- Steering wheel group).

4. Remove the steering column shroud.(Refer to ST-steering column and shaft)

5. Remove clock spring connector(A), then remove clock spring(B).

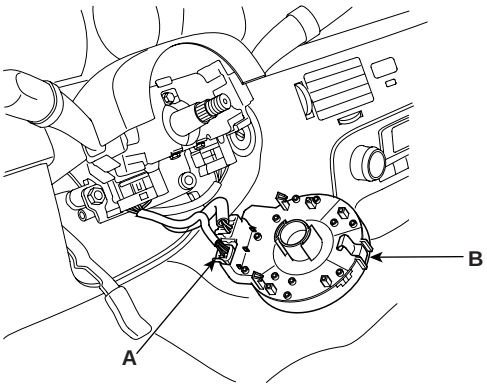

KRRE500R

6. Installtion is the reverse of removal.

NOTE

After installing the clock spring, confirm proper system operation; Turn the ignition switch ON: the SRS indicator light should turn on about 6 seconds and then go off.

INSPECTION EAF5F884

DRIVER AIRBAG (DAB)

If any improper parts are found during the following inspection, replace the airbag module with a new one.

CAUTION

Never attempt to measure the circuit resistance of the airbag module (squib) even if you are using the specified tester. If the circuit resistance is measured with a tester, accidental airbag deployment will result in serious personal injury.

1. Check pad cover for dents, cracks or deformities.
2. Check the airbag module for denting, cracking or deformation.
3. Check hooks and connectors for damage, terminals for deformities, and harness for binds.
4. Check airbag inflator case for dents, cracks or deformities.

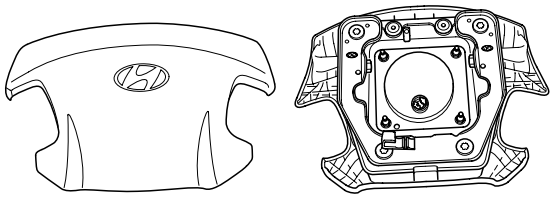

(front view) (back view)

ERRF500G

5. Install the airbag module to the steering wheel to check for fit or alignment with the wheel.

CLOCKSPRING

1. If, as a result of the following checks, even one abnormal point is discovered, replace the clock spring with a new one.
2. Check connectors and protective tube for damage, and terminals for deformities.

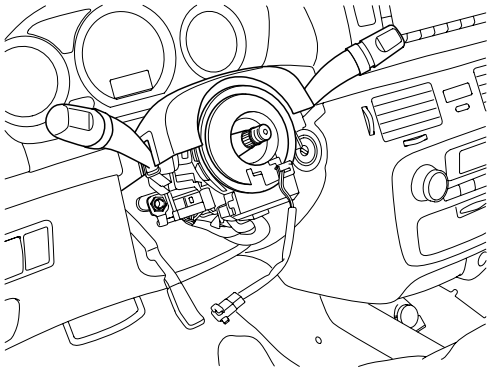

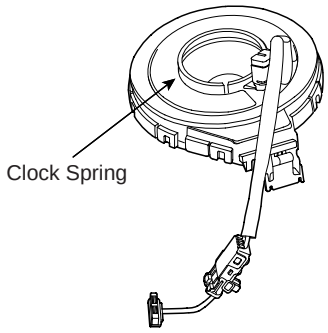

ERRF500H

AIR BAG MODULE (PASSENGER SIDE)

AIR BAG MODULE

DESCRIPTION E4C0F150

The passenger Airbag (PAB) is installed inside the dash and protects the front passenger in the event of a frontal crash. The SRSCM determines if and when to deploy the PAB.

CAUTION

Never attempt to measure the circuit resistance of the airbag module (squib) even if you are using the specified tester. If the circuit resistance is measured with a tester, accidental airbag deployment will result in serious personal injury.

COMPONENTS E2F4F334

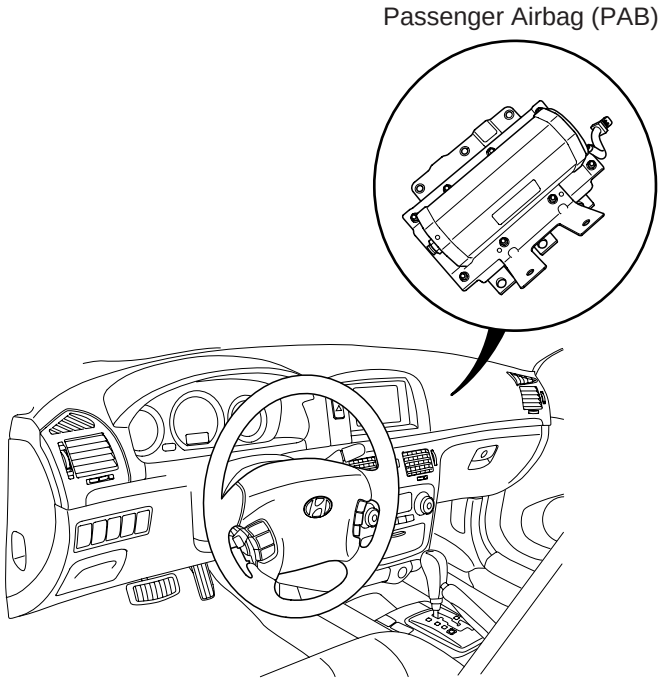

ERRF500I

REMOVAL E904F083

1. Disconnect the battery negative cable and wait at least three minutes before beginning work.

2. Remove the glove box (Refer to BD group - glove box) , then disconnect the connector(A).

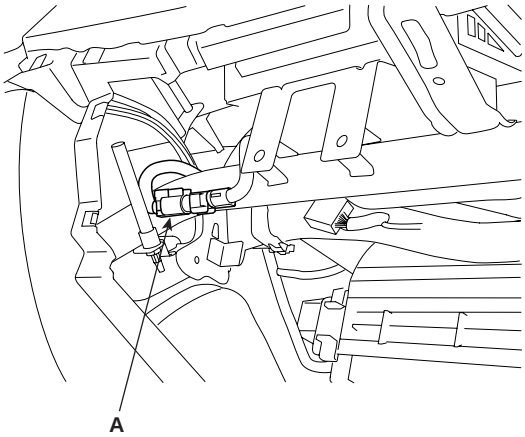

KRRE708A

3. Remove the crash pad. (Refer to BD group - crash pad)

4. Remove the mounting nuts (A) from the crash pad. Then remove the passenger's airbag (B).

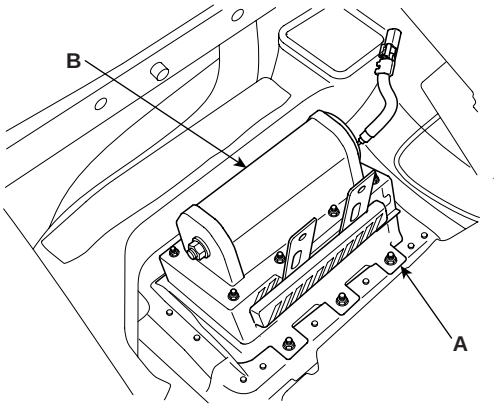

KRRE500T

5. Installation is the reverse of removal.

NOTE

After installing the clock spring, confirm proper system operation; Turn the ignition switch ON: the SRS indicator light should turn on about 6 seconds and then go off.

AIR BAG MODULE (SIDE AIR BAG)

AIR BAG MODULE

DESCRIPTION E4DABC33

The two Side Airbags (SAB) are installed inside the driver and passenger seat and protects the driver and front passenger from danger when side crash occurs. The SRSCM determines deployment of side airbag by using Side Impact Sensor (SIS) signal.

CAUTION

Never attempt to measure the circuit resistance of the airbag module (squib) even if you are using the specified tester. If the circuit resistance is measured with a tester, accidental airbag deployment will result in serious personal injury.

COMPONENTS E08EE378

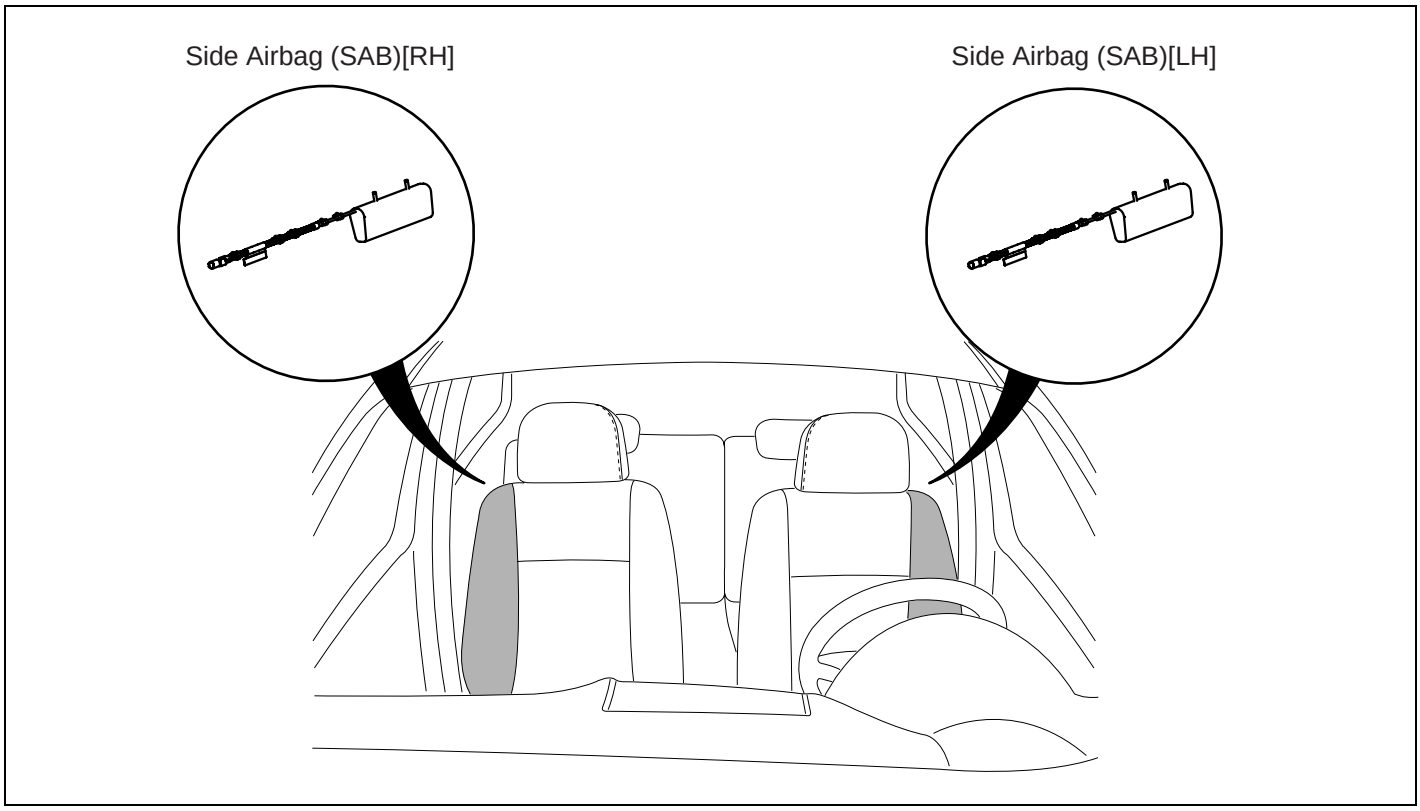

ERRF500J

REMOVAL E4E35EEB

1. Disconnect the battery negative cable and wait at least 3 minutes before beginning work.

2. Remove the front seat assambly(Refer to BD-Front Seat)

3. Remove the seat-back cover.(Refer to BD-Front Seat)

4. Loosen the nuts and remove the SAB(A) module.

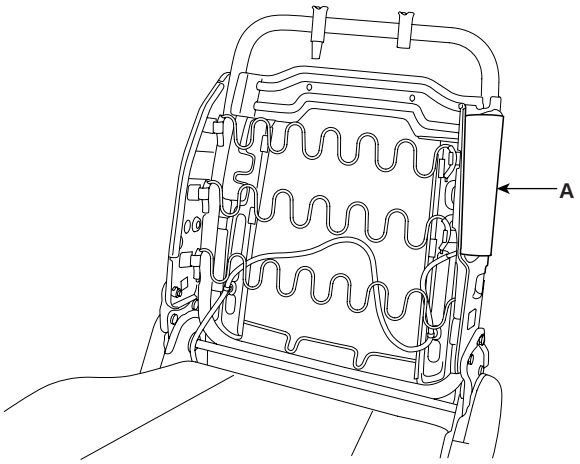

ARIE500U

5. Installation is the reverse of removal.

NOTE

After installing the side airbag, confirm proper system operation: Turn the ignition switch ON; the SRS indicator light should turn on about six seconds and then go off.

AIR BAG MODULE (CURTAIN AIR BAG)

DESCRIPTION E713DBB0

Curtain airbags are installed inside the headliner (LH and RH) and protect the driver and passanger from danger when side crash occurs. The SRSCM determines deployment of curtain airbag by using side impact sensor (SIS) signal.

CAUTION

Never attempt to measure the circuit resistance of the airbag module even if you are using the specified tester. If the circuit resistance is measured with a tester, accidental airbag deployment will result in serious personal injury.

COMPONENTS EA3BDFF7

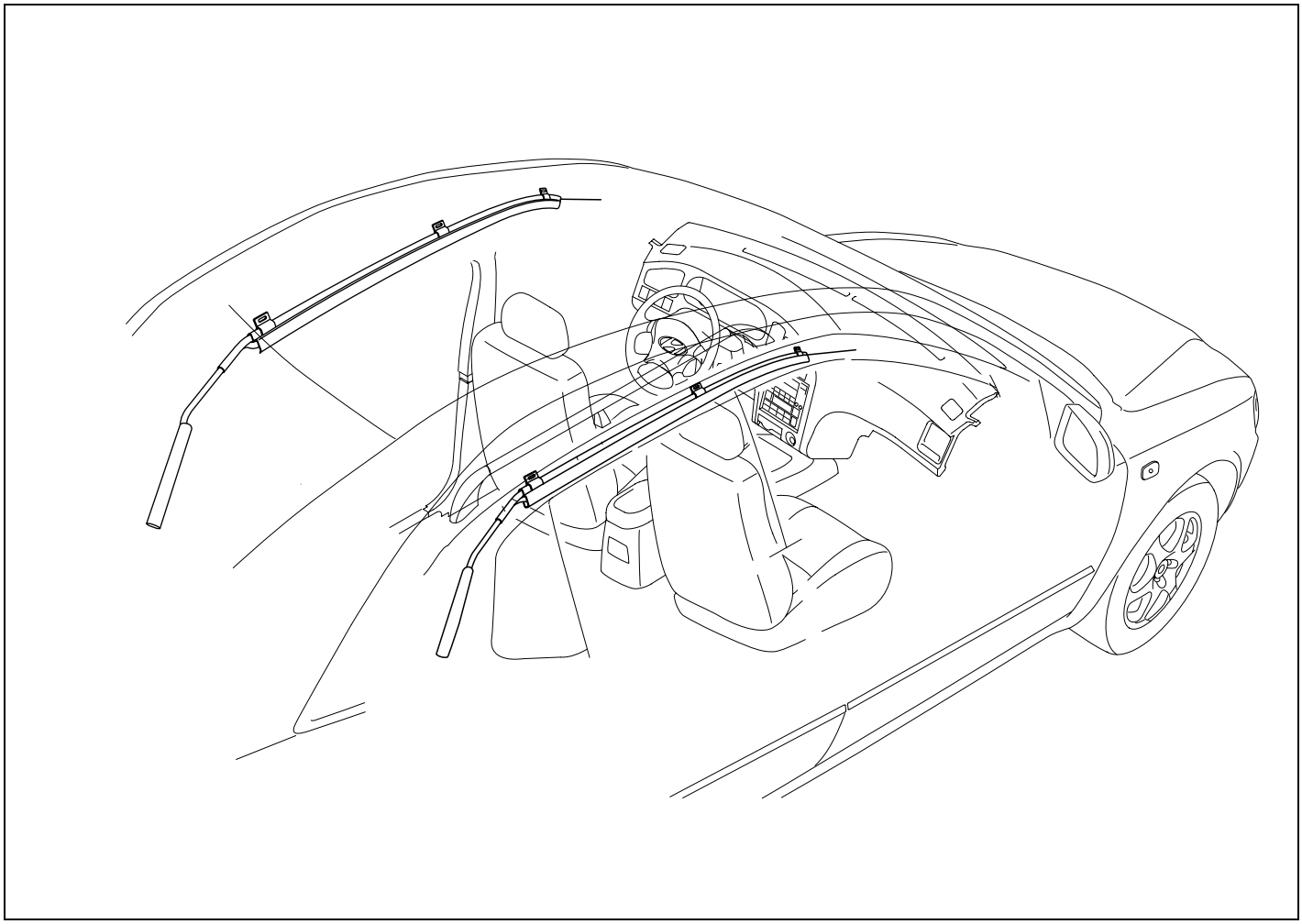

KRRE102J

REMOVAL E6AF1AC6

1. Disconnect the battery negative cable and wait of least 3 minutes before beginning work.

2. Remove the following parts (Refer to BD- group).
   - Front and rear seat
   - Interior trim
   - Trunk trim
   - Headlining

3. Disconnect the connector (A).

4. After loosening the mounting bolts, remove the curtain airbag (B).

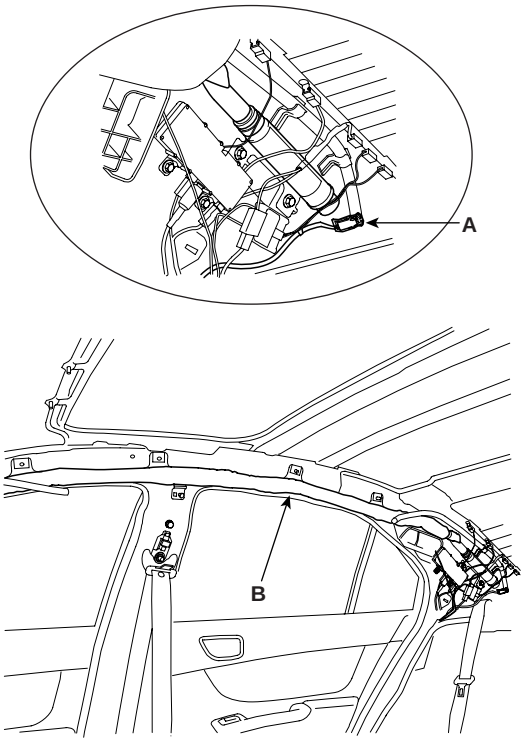

KRRE500V

5. Installation is the reverse of removal.

NOTE

After installing the curtain airbag, confirm proper system operation: Turn the ignition switch ON; the SRS indicator light should turn on about seconds and then go off.

SEAT BELT PRETENSIONER

SEAT BELT PRETENSIONER

DESCRIPTION EBAA613A

The Seat Belt Pretensioners (BPT) are installed inside B-Pillar (LH & RH). When a vehicle crashes with a certain degree of frontal impact, the pretensioner seat belt helps to reduce the severity of injury to the front seat occupants by retraction the seat belt webbing. This prevents the front occupants from thrusting forward and hitting the steering wheel or the instrument panel when the vehicle crashes.

CAUTION

Never attempt to measure the circuit resistance of the Seat Belt Pretensioner (BPT) even if you are using the specified tester. If the circuit resistance is measured with a tester, the pretensioner will be ignited accidentally. This will result in serious personal injury.

COMPONENTS EAB4EE0F

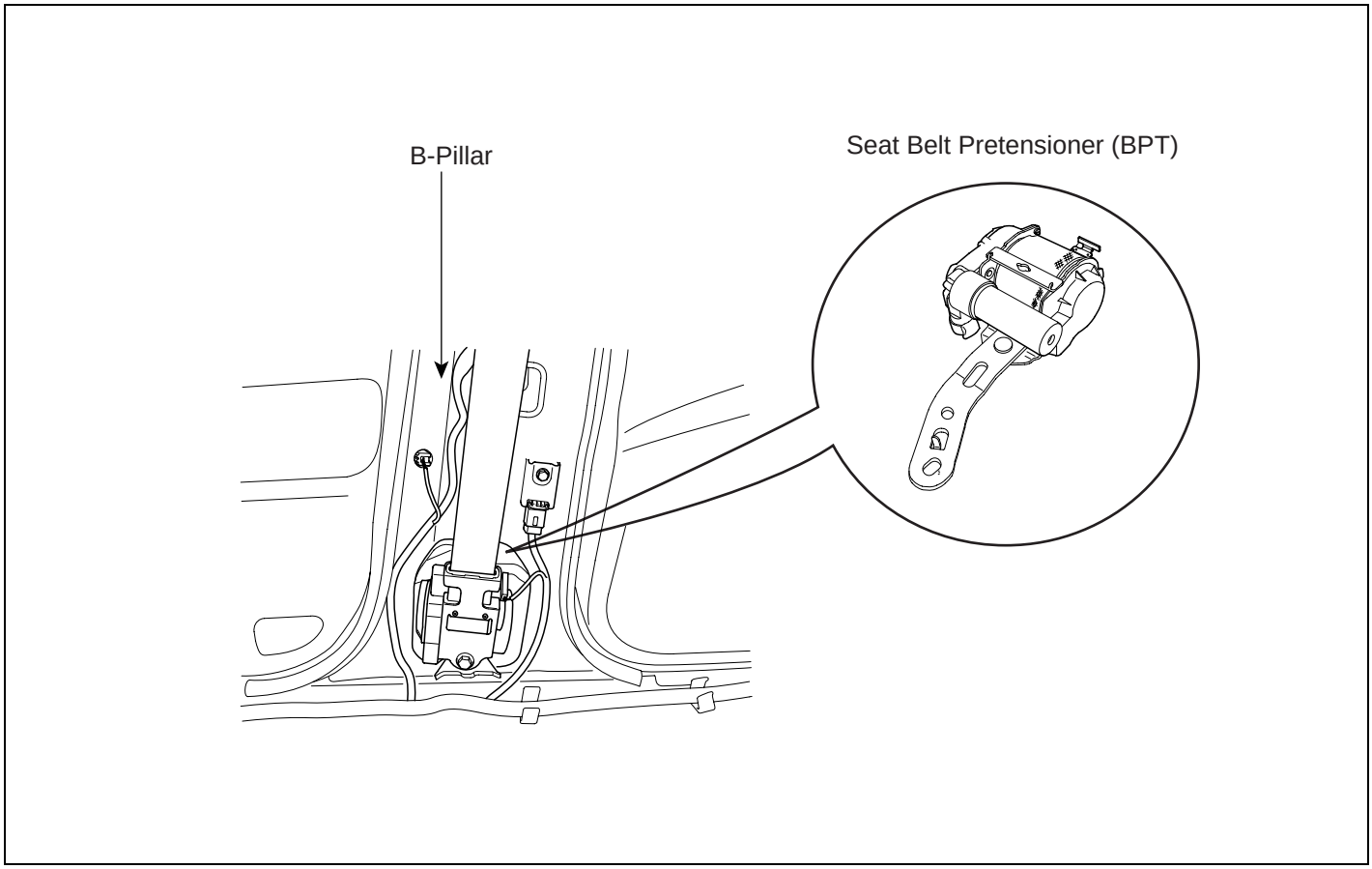

ERRF500K

REMOVAL EEE0BA6E

1. Disconnect the battery negative cable, and wait at least three minutes before beginning work.
2. Remove the front seat assembly (Refer to BD group - seat)
3. Remove the front door scuff trim (Refer to BD group - interior)
4. Remove the center pillar trim (Refer to BD group - interior)
5. Remove the lower anchor bolt (Refer to BD group - belt)
6. Remove the upper anchor bolt (Refer to BD group - belt)
7. Disconnect the connector (A).
8. Lossen the mounting bolt.
   Remove the pretensioner (B).

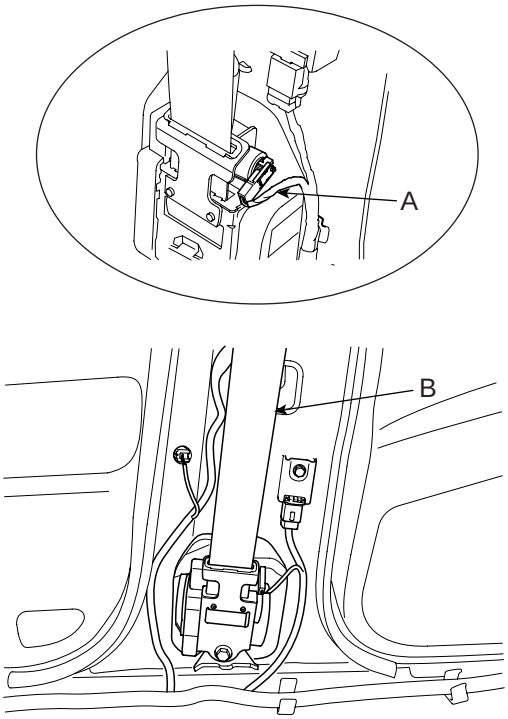

KRRE500J

9. Installation is the reverse of removal.

NOTE

After installing the belt pretensioner, confirm proper system operation: Turn the ignition switch ON: the SRS indicator light should turn on about six seconds and then go off.

SRS CONTROL SYSTEM

FRONT IMPACT SENSOR (FIS)

DESCRIPTION EE0B3FBA

The front impact sensors (FIS) are installed inside the member inner. They are remote sensor that detect acceleration due to collision at their mounting locations. The primary purpose of the Front Impact Sensor (FIS) is to provide an indication of a collition. the Front Impact Sensor(FIS) sends acceleration data to the SRSCM.

COMPONENTS E5BB5EF7

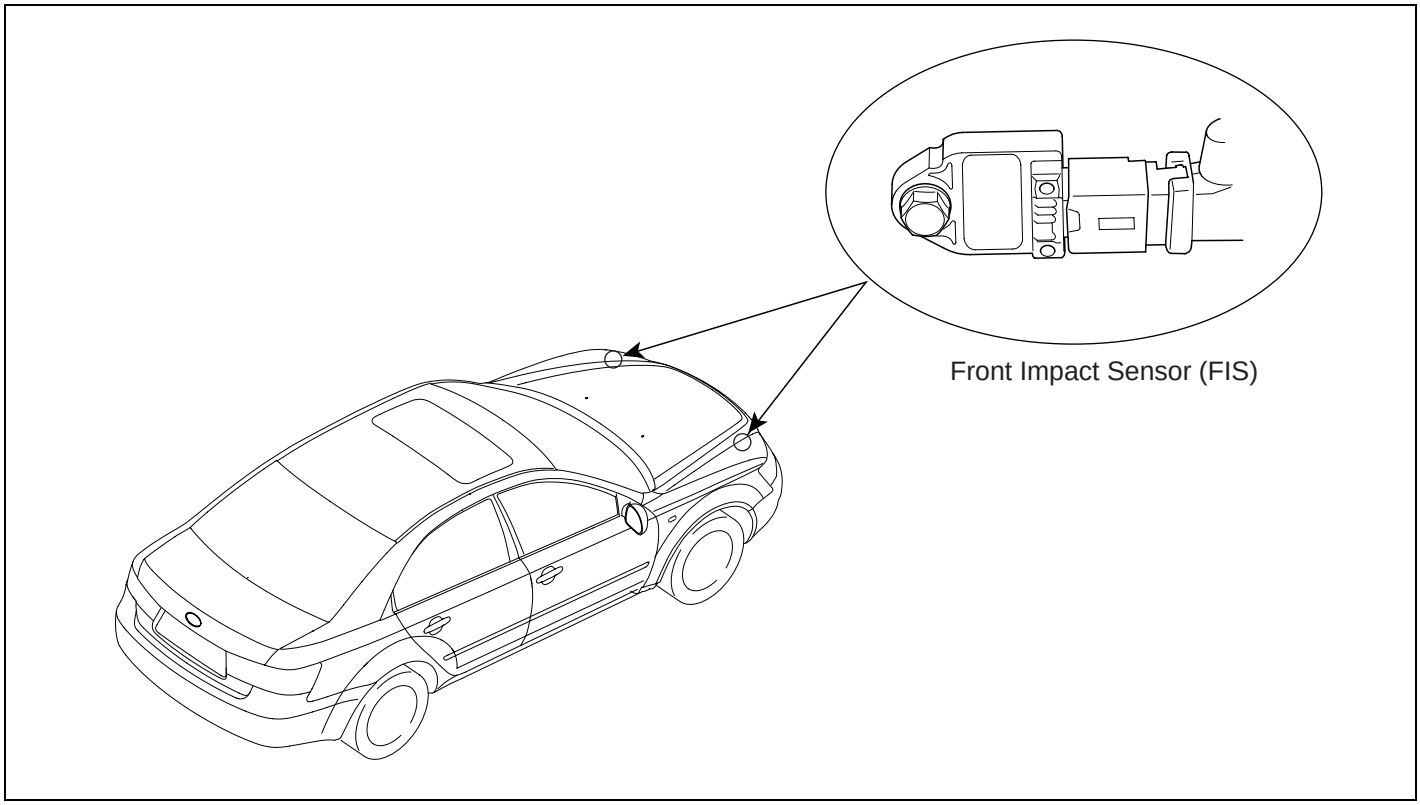

ERRF500L

REMOVAL EBAE7FD3

CAUTION

- ***Removal of the airbag must be performed according to the precautions/ procedures described previously.***
- ***Before disconnecting the front impact sensor connector, disconnect the front airbag connector(s).***
- ***Do not turn the ignition switch ON and do not connect the battery cable while replacing the front impact sensor.***

1. Disconnect the negative battery cable, and wait at least three minutes before beginning work.

2. Remove the bolt(A) then remove the front impact sensor(B).

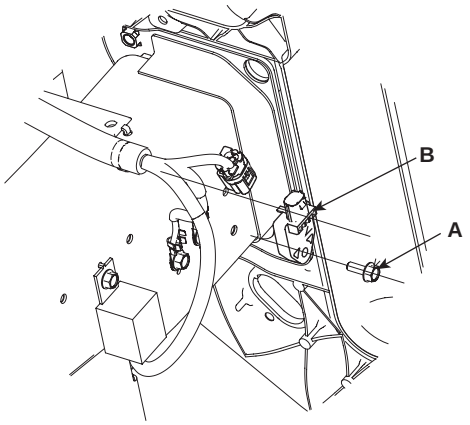

KRRE352A

3. Installation is the reverse of removal.

NOTE

After installing the front impact sensor, confirm proper system operation: Turn the ignition switch ON: the SRS indicator light should turn on about six seconds and then go off.

SIDE IMPACT SENSOR (SIS)

DESCRIPTION E11C8C32

The Side Impact Sensor (SIS) system consist of two front SIS which are installed inside the B-Pillar (LH and RH). They are remote sensor that detect acceleration due to collision at their mounting locations. The primary purpose of the Side Impact Sensor (SIS) is to provide an indication of a collision. The Side Impact Sensor (SIS) sends acceleration data to the SRSCM.

COMPONENTS E15EE94D

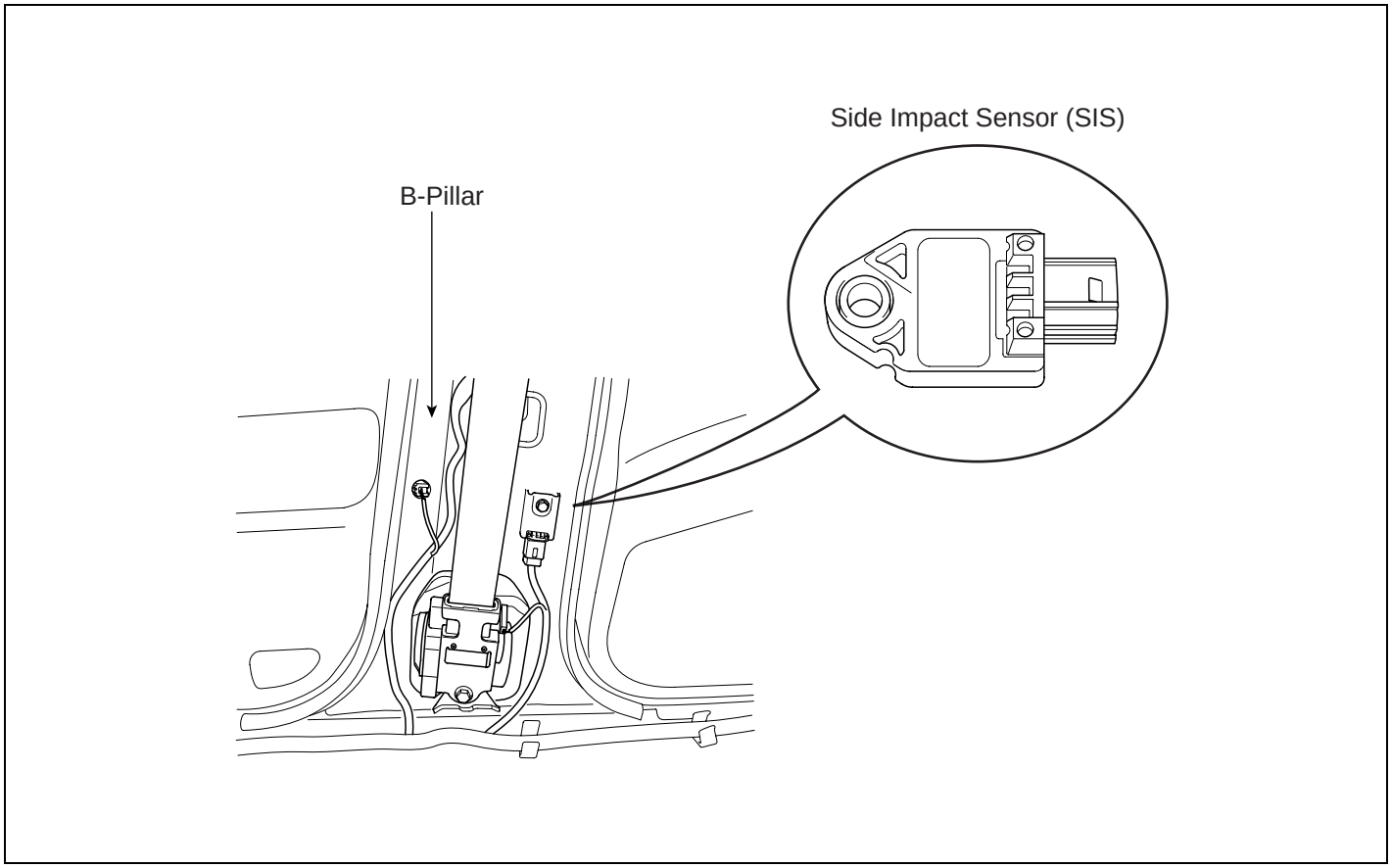

ERRF500M

REMOVAL EC97211F

CAUTION

- ***Removal of the airbag must be performed according to the precautions/procedures described previously.***
- ***Before disconnecting the side impact sensor connector(s), disconnect the side airbag connector(s).***
- ***Do not turn the ignition switch ON and do not connect the battery cable while replacing the side impact sensor.***

1. Disconnect the negative battery cable, and wait at least three minutes before beginning work.
2. Remove the seat assembly (Refer to BD group - seat).
3. Remove the front door scuff trim (Refer to BD group - interior).
4. Remove the center pillar trim (Refer to BD group - interior).
5. Remove the lower anchor bolt (Refer to BD group - belt).
6. Remove the belt pretensioner.
7. Remove the bolt(A) then remove the side impact sensor (B).

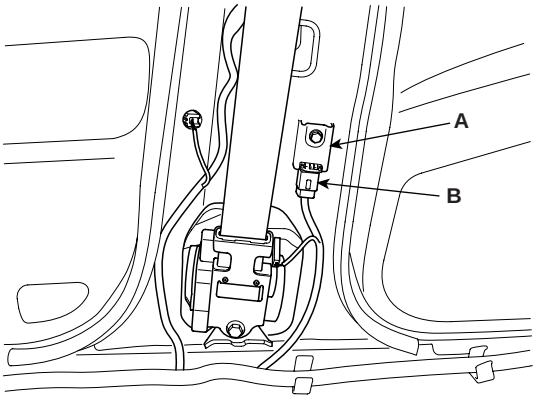

KRRE202K

INSTALLATION E58DC589

CAUTION

- ***Be sure to install the harness wires so that they are not pinched or interfere with other parts.***
- ***Do not turn the ignition switch ON and do not connect the battery cable while replacing the side impact sensor.***

1. Install the new side impact sensor with the bolt then connect the SRS harness connector to the side impact sensor.
2. Reinstall belt pretensioner.
3. Reconnect the negative battery cable.
4. After installing the side impact sensor, confirm proper system operation: Turn the ignition switch ON: the SRS indicator light should turn on about six seconds and then go off.

TROUBLESHOOTING

HI-SCAN CHECK EED2B9DD

1. Turn the ignition switch off.
2. Connect the Hi-Scan Pro connector to the datalink connector located under the crash pad.
3. Connect the Hi-Scan Pro power cable.
4. Turn the ignition switch on and power on the Hi-Scan Pro.
5. Read DTCs.
6. Find and repair the trouble, and clear the DTCs using Hi-Scan Pro.
7. Disconnect the Hi-Scan Pro.

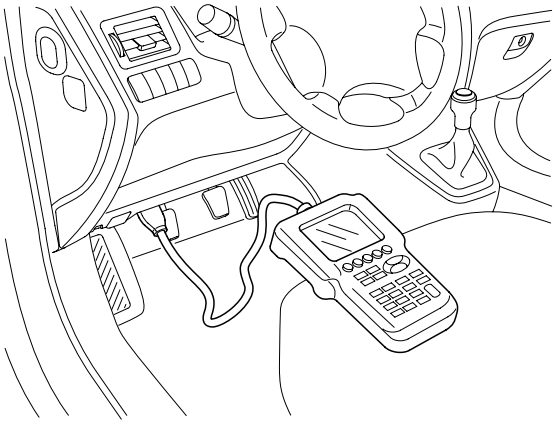

KRQE900A

DIAGNOSTIC TROUBLESHOOTING FLOW

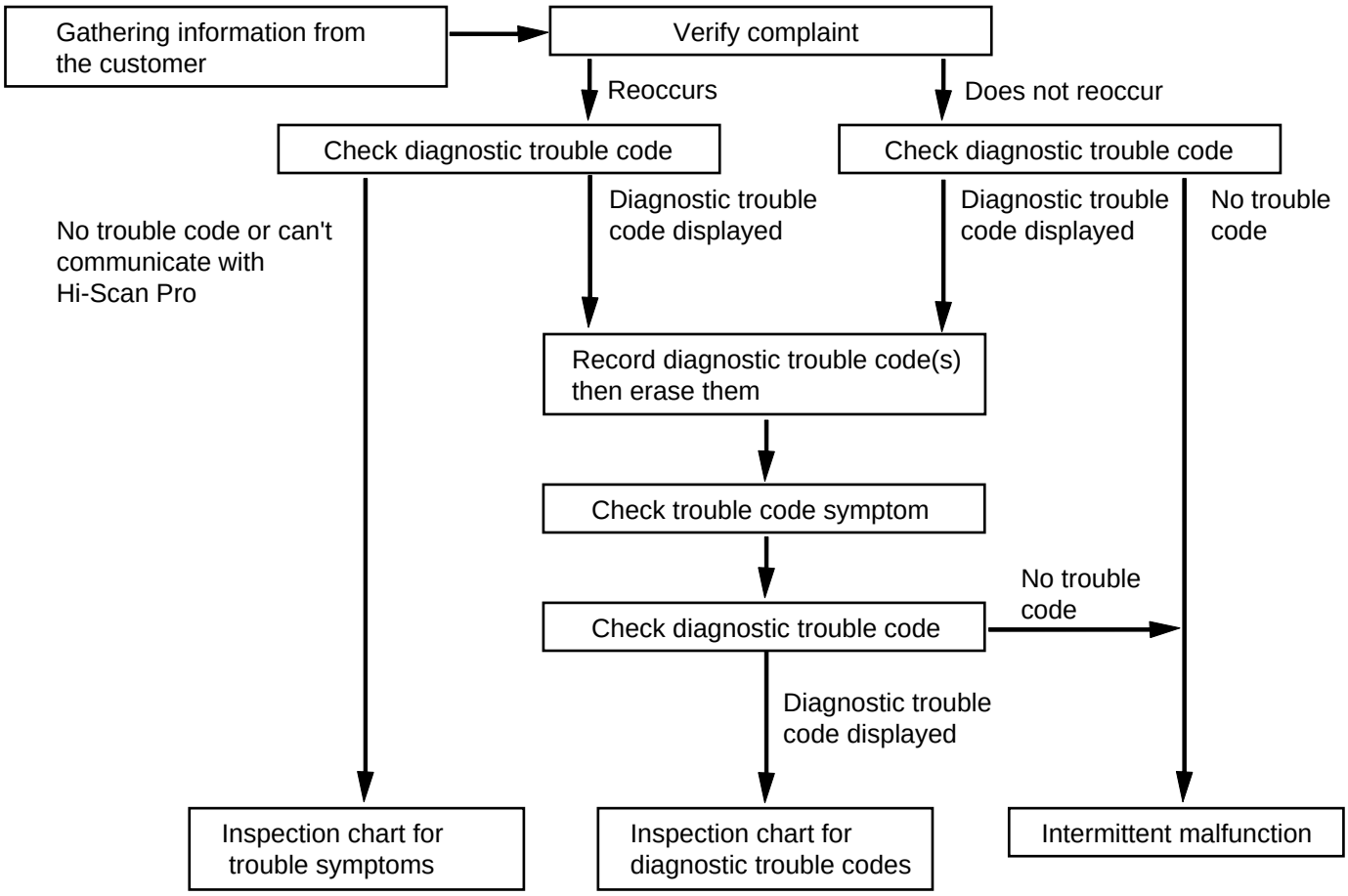

ERA9035A

CIRCUIT DIAGRAM(1) EDFD0A63

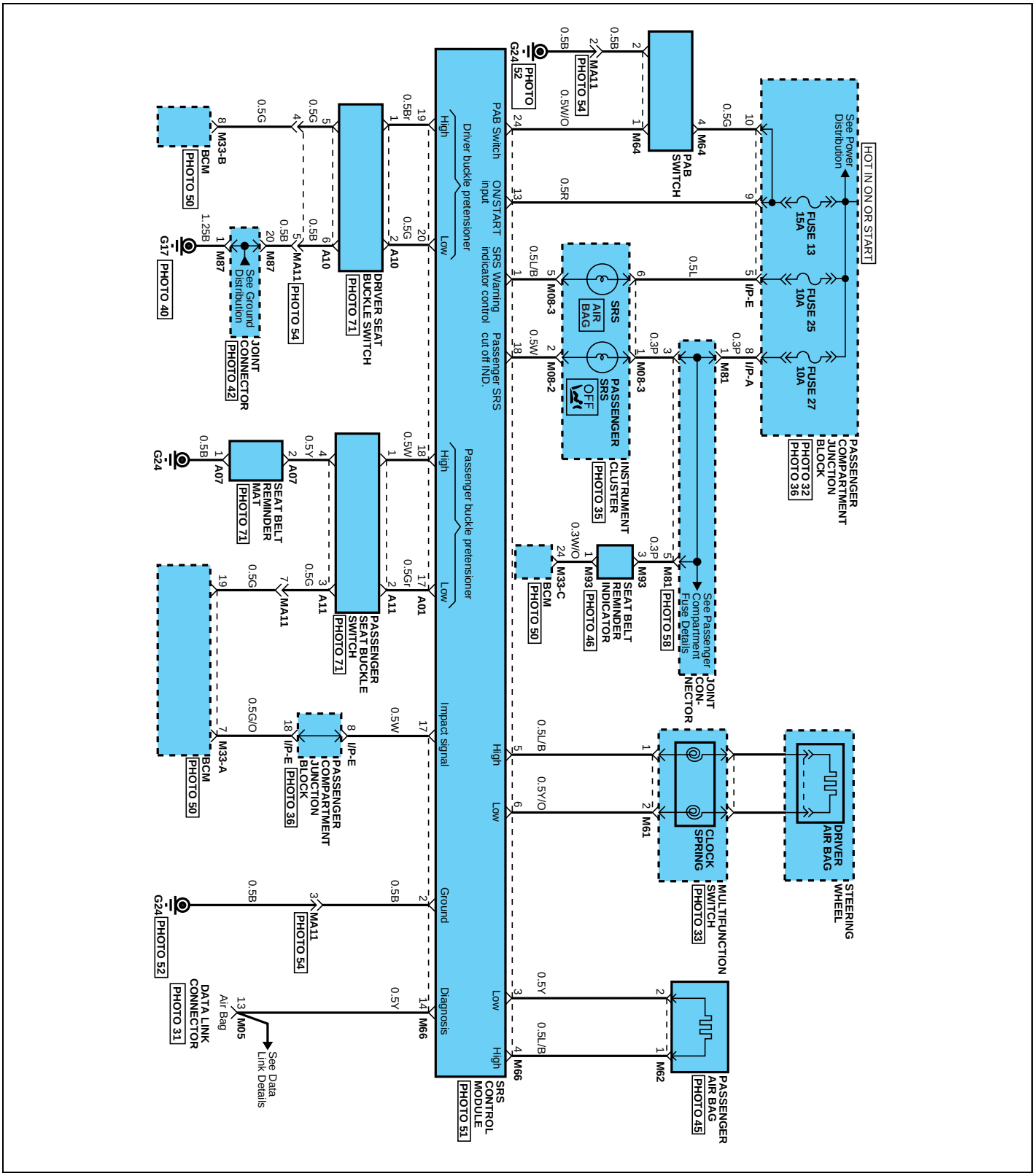

ERRF501V

CIRCUIT DIAGRAM(2)

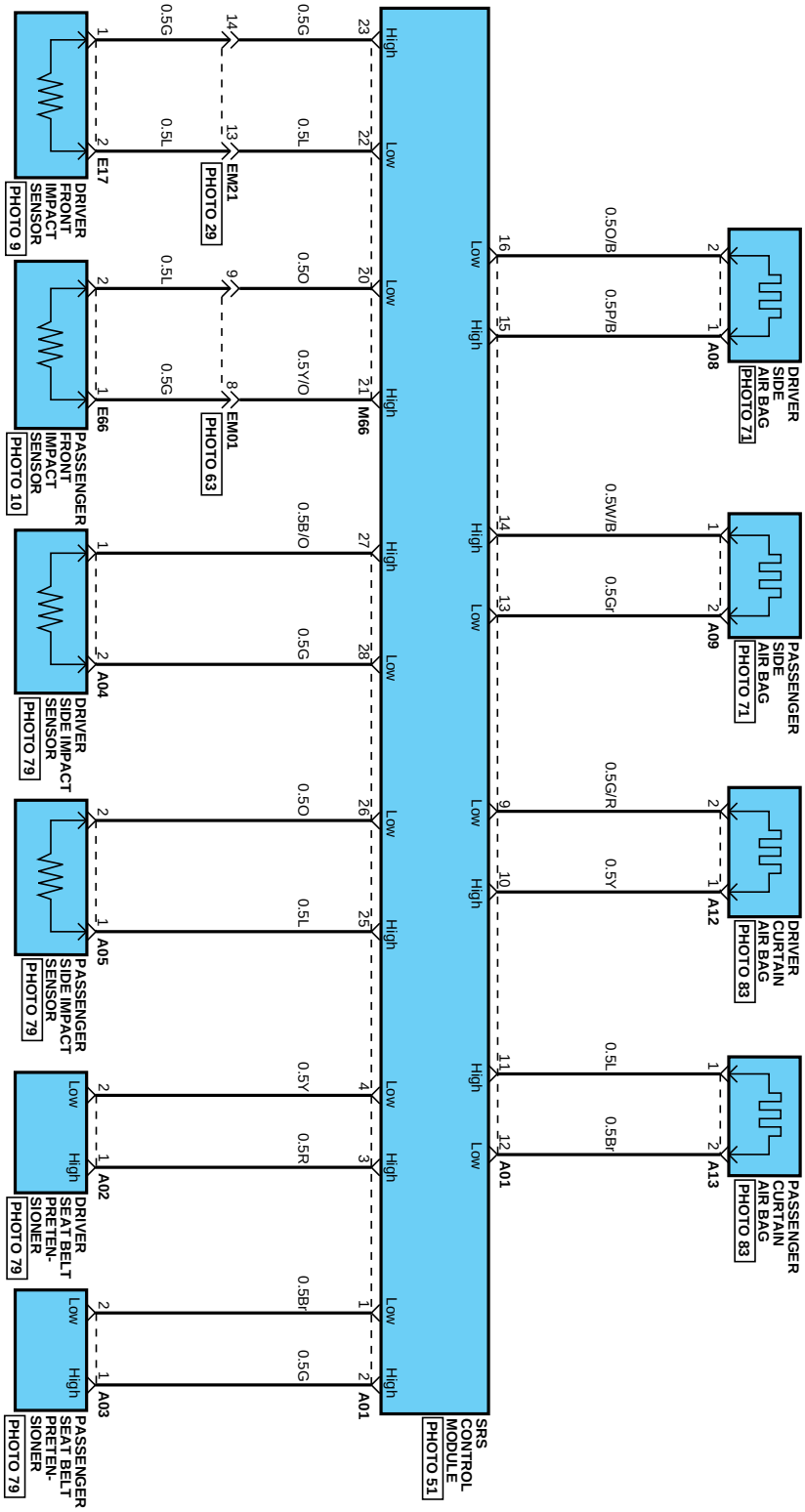

ERRF501W

SRSCM CONNECTOR PIN LAYOUT EF0B2D8F

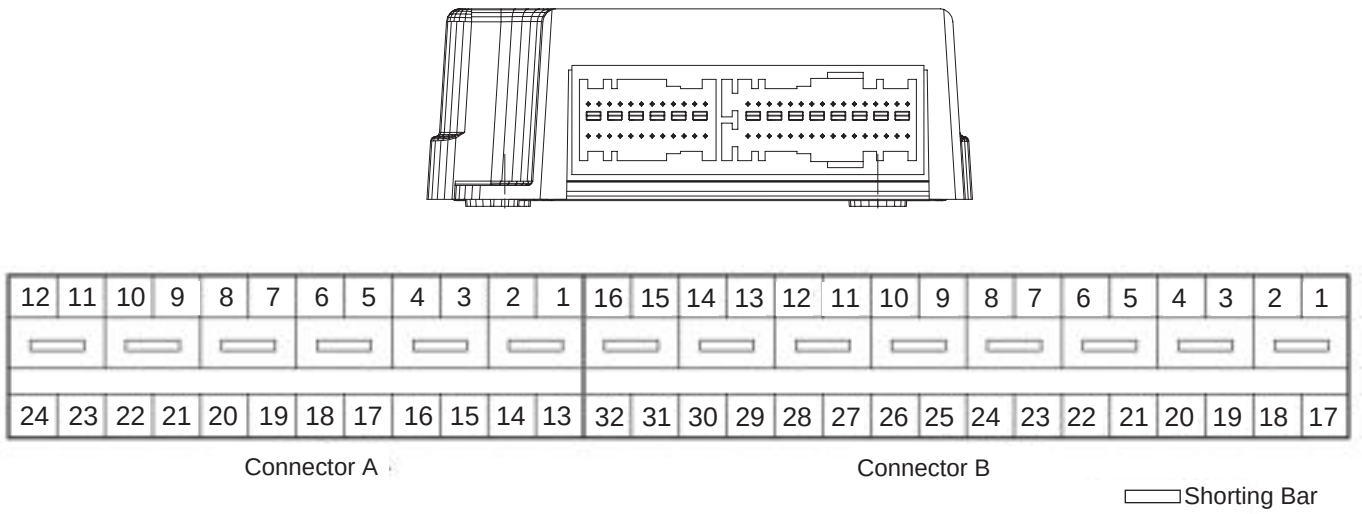

ACU PIN #	Connector A	ACU PIN #	Connector B
1	AIRBAG WARNING LAMP	1	Pass. Frontal Pret - low
2	GND	2	Pass. Frontal Pret - high
3	Passenger 1st Stage - low	3	Drv Frontal Pret - high
4	Passenger 1st Stage - high	4	Drv Frontal Pret - low
5	Driver 1st Stage - high	5	
6	Driver 1st Stage - low	6	
7		7	
8		8	
9		9	Drv curtain airbag - low
10		10	Drv curtain airbag - high
11		11	Pass curtain airbag - high
12		12	Pass curtain airbag - low
13	Ignition	13	Pass Side SAB - low
14	ISO9141 (K-Line)	14	Pass Side SAB - high
15		15	Drv curtain airbag - high
16		16	Drv curtain airbag - low
17	Crash Out	17	Passenger Buckle-Pretensioner - LOW
18	PAD lamp	18	Passenger Buckle-Pretensioner - HIGH
19		19	Driver Buckle-Pretensioner - HIGH
20	FIS Pass LOW	20	Driver Buckle-Pretensioner - LOW
21	FIS Pass HIGH	21	
22	FIS Drv LOW	22	
23	FIS Drv HIGH	23	
24	PAD Switch	24	
		25	SIS Pass HIGH
		26	SIS Pass LOW
		27	SIS Drv HIGH
		28	SIS Drv LOW
		29	
		30	
		31	
		32	

* : Shorting Bar Switch

ERRF500O

DIAGNOSTIC TROUBLE CODE (DTC) TABLE

Code	Fault description	Page
B1101	Ignition voltage high	RT - 39
B1102	Ignition voltage low	RT - 39
B1328	FIS Driver defect	RT - 43
B1329	FIS Driver communication error	RT - 43
B1333	FIS Passenger defect	RT - 43
B1334	FIS Passenger communication error	RT - 43
B1346	Driver airbag resistance too high	RT - 46
B1347	Driver airbag resistance too low	RT - 46
B1348	Driver airbag resistance circuit short to ground	RT - 49
B1349	Driver airbag resistance circuit short to battery	RT - 52
B1352	Passenger airbag resistance too high	RT - 55
B1353	Passenger airbag resistance too low	RT - 55
B1354	Passenger airbag resistance circuit short to ground	RT - 58
B1355	Passenger airbag resistance circuit short to battery	RT - 60
B1361	Pretensioner front-Driver resistance too high	RT - 62
B1362	Pretensioner front-Driver resistance too low	RT - 62
B1363	Pretensioner front-Driver resistance circuit short to ground	RT - 66
B1364	Pretensioner front-Driver resistance circuit short to battery	RT - 69
B1367	Pretensioner front-Passenger resistance too high	RT - 62
B1368	Pretensioner front-Passenger resistance too low	RT - 62
B1369	Pretensioner front-Passenger resistance circuit short to ground	RT - 66
B1370	Pretensioner front-Passenger resistance circuit short to battery	RT - 69
B1378	Side airbag front-Driver resistance too high	RT - 72
B1379	Side airbag front-Driver resistance too low	RT - 72
B1380	Side airbag front-Driver resistance circuit short to ground	RT - 75
B1381	Side airbag front-Driver resistance circuit short to battery	RT - 77
B1382	Side airbag front-Passenger resistance too high	RT - 72
B1383	Side airbag front-Passenger resistance too low	RT - 72
B1384	Side airbag front-Passenger resistance circuit short to ground	RT - 75
B1385	Side airbag front-Passenger resistance circuit short to battery	RT - 77
B1395	Squib Interconnection Fault	RT - 79
B1400	SIS front-Driver defect	RT - 80
B1403	SIS front-Passenger defect	RT - 80
B1409	SIS front-Driver communication error	RT - 80
B1410	SIS front-Passenger communication error	RT - 80
B1473	Inflatable Curtain-Driver resistance too high	RT - 83
B1474	Inflatable Curtain-Driver resistance too low	RT - 83

B1475	Inflatable Curtain-Driver resistance circuit short to ground	RT - 87
B1476	Inflatable Curtain-Driver resistance circuit short to battery	RT - 90
B1477	Inflatable Curtain-Pass resistance too high	RT - 83
B1478	Inflatable Curtain-Pass resistance too low	RT - 83
B1479	Inflatable Curtain-Pass resistance circuit short to ground	RT - 87
B1480	Inflatable Curtain-Pass resistance circuit short to battery	RT - 90
B1527	Passenger Airbag on-off switch open or short to Battery	RT - 93
B1528	Passenger Airbag on-off switch short or short to Ground	RT - 97
B1529	Passenger Airbag on-off switch defect	RT - 101
B1530	Passenger Airbag on-off switch instability	RT - 101
B1620	Internal fault- Replace the ACU	RT - 105
B1650	Crash recorded in 1st Stage only	RT - 105
B1651	Crash recorded Side Airbag front-Driver	RT - 105
B1652	Crash recorded Side Airbag front-Passenger	RT - 105
B1655	Crash recorded - Pass side with PAB inhibited (no deployment)	RT - 105
B1659	Rear impact detected	RT - 106
B1701	Buckle Pretensioner front-Driver resistance too high	RT - 107
B1702	Buckle Pretensioner front-Driver resistance too low	RT - 107
B1703	Buckle Pretensioner front-Driver resistance circuit short to Ground	RT - 111
B1704	Buckle Pretensioner front-Driver resistance circuit short to Battery	RT - 113
B1706	Buckle Pretensioner front-Passenger resistance too high	RT - 107
B1707	Buckle Pretensioner front-Passenger resistance too low	RT - 107
B1708	Buckle Pretensioner front-Passenger resistance circuit short to Ground	RT - 111
B1709	Buckle Pretensioner front-Passenger resistance circuit short to Battery	RT - 113
B2500	SRS Warning lamp Failure	RT - 116
B2505	Passenger airbag disable lamp failure	RT - 120

DTC B1101 BATTERY VOLTAGE TOO HIGH
DTC B1102 BATTERY VOLTAGE TOO LOW

DTC DESCRIPTION EE63E8ED

The SRSCM sets above DTC(s) if it detects that the battery voltage of restraints system is too high or too low. When the voltage returns to normal, the SRS warning light automatically goes off and a malfunction is no longer indicated.

DTC DETECTING CONDITION E14AFFC0

DTC	Condition	Probable cause
B1101	Battery Voltage ＞ 16.0 V for 10 seconds after IG ON	• Battery • Alternator • Wiring Harness • SRSCM
B1102	Battery Voltage ＜ 9.0 V for 10 seconds after IG ON	

SCHEMATIC DIAGRAM EABDBDB9

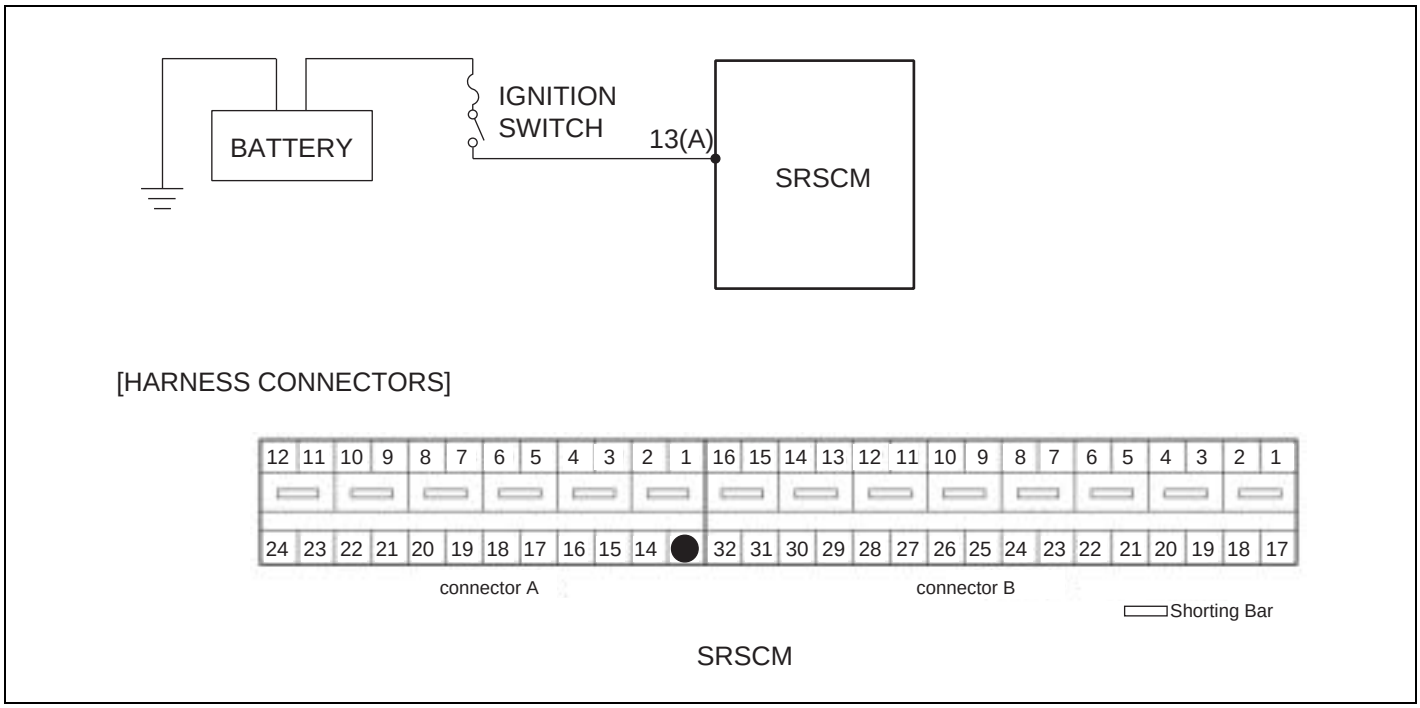

ERRF500P

SPECIFICATION E0817C2A

Voltage : 9.0 ≤ V ≤ 16.0 V

TERMINAL & CONNECTOR INSPECTION E9671CDD

1. Visually inspect all connectors related to the affected circuit for damage and secure connection.
2. Inspect terminals for damage and corrosion.

   CAUTION

   Avoid damaging connectors during the inspection process.

3. Are any problems found?

   NO

   ▶ Go to next step.

   YES

   ▶ After repairing the trouble part, check whether DTC occurs or not.

INSPECTION PROCEDURE EACF5AAD

1. PREPARATION
   1) Turn the ignition switch to LOCK.
   2) Disconnect the negative (-) terminal from the battery and wait for at least 3 minutes.
   3) Remove the DAB module and disconnect the DAB connector.
   4) Disconnect the connectors of the PAB, SAB, CAB, BPT, BUPT, FIS and SIS.
   5) Disconnect the SRSCM connector.
2. CHECK SOURCE VOLTAGE
   1) Turn the ignition switch to ON.
   2) Measure voltage between the terminal 13(A) of SRSCM harness connector and chassis ground.

specification(voltage) : 9.0 ≤ V ≤ 16.0 V

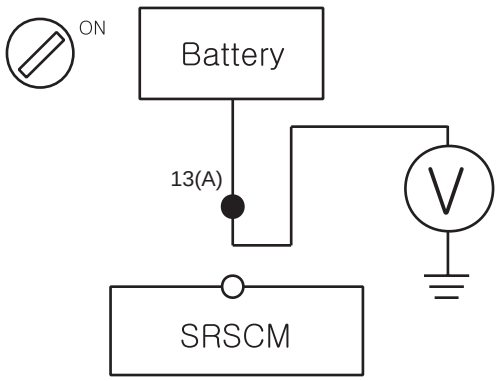

ERRF500Q

Is the measured voltage within specification?

NO

▶ Check the battery.

YES

▶ Replace the SRSCM with a new one, and then check the vehicle again. At this time, if the vehicle normally operates with a new SRSCM, the fault may be the SRSCM(Replace SRSCM).

3. CHECK THE BATTERY

1) Check the battery.
● Refer to "EE" group in this SERVICE MANUAL.
Is the battery normal?

YES

▶ Check the alternator.

YES

▶ Repair or replace the battery(Refer to "EE" group in this SERVICE MANUAL).

4. CHECK ALTERNATOR

1) Check the altenator.
● Refer to "EE" group in this SERVICE MANUAL.
Is the alternator normal?

YES

▶ Check wiring harness.

NO

▶ Repair or replace the alternator(Refer to "EE" group in this SERVICE MANUAL).

5. CHECK WIRING HARNESS

1) Check the wiring harness between the battery and SRSCM.
Is the wiring harness normal?

YES

▶ Check the DTC again.

NO

▶ Repair or Replace the wiring harness.

6. CHECK THE DTC AGAIN

1) Turn the ignition switch to LOCK and wait for at least 30 seconds.

CAUTION

Check again that the battery negative (-) terminal is disconnected from the battery.

2) Install the DAB module and connect the DAB connector.

3) Connect the connectors of the PAB, SAB, CAB, BPT, BUPT, FIS and SIS.

4) Connect the SRSCM connector.

5) Connect the negative (-) terminal to the battery.

6) Connect a Hi-Scan(Pro) to the data link connector.

7) Turn the ignition switch to ON and check the vehicle again.
Does Hi-Scan (Pro) indicate any DTC?

YES

▶ Perform the troubleshooting procedures associated with those codes.

NO

▶ Problem is intermittent or was repaired and SRSCM memory was not cleared.

DTC B1328 DFIS DEFECT
DTC B1329 DFIS COMMUNICATION ERROR
DTC B1333 PFIS DEFECT
DTC B1334 PFIS COMMUNICATION ERROR

DTC DESCRIPTION E33D1104

The detecting system for front crash consists of the SRSCM and two Front Impact Sensors (FIS). The SRSCM sets above DTC(s) if it detects that any FIS is defective or there is communication error between any FIS and the SRSCM.

DTC DETECTING CONDITION E69CA378

DTC	Condition	Probable cause
B1328 B1329 B1333 B1334	• Open between FIS and SRSCM • Front Impact Sensor(FIS) Malfunction • SRSCM Malfunction	• Wiring Harness • Front Impact Sensor(FIS) squib • SRSCM

SCHEMATIC DIAGRAM EEAC5EB2

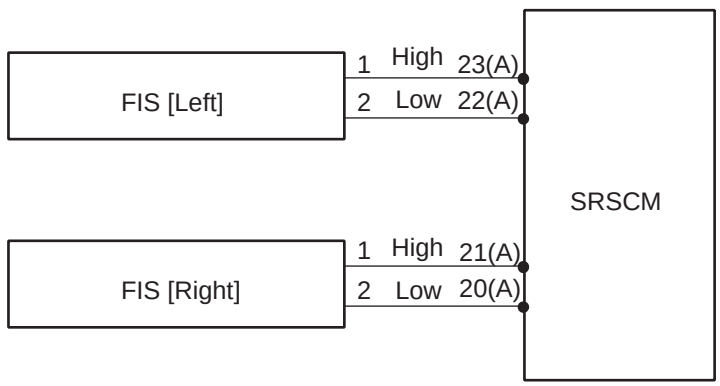

FIS [Left]

Terminal	Connected to	Function
1	SRSCM Terminal 23(A)	FIS High
2	SRSCM Terminal 22(A)	FIS Low

FIS [Right]

Terminal	Connected to	Function
1	SRSCM Terminal 21(A)	FIS High
2	SRSCM Terminal 20(A)	FIS Low

[HARNESS CONNECTOR]

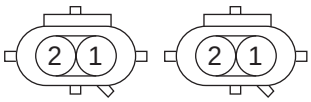

FIS(Left) FIS(Right)

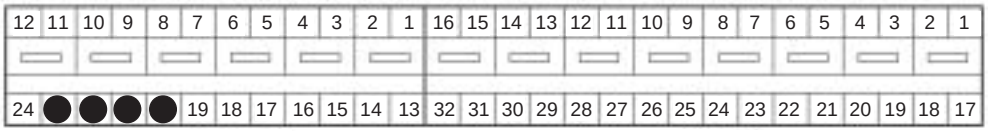

connector A connector B

Shorting bar

ERRF500R

TERMINAL & CONNECTOR INSPECTION EF9691CA

Refer to DTC B1101.

INSPECTION PROCEDURE ED71AA4D

1. PREPARATION
   Refer to DTC B1101.

2. CHECK FIS CIRCUIT

   1) Measure resistance between the terminal 1 of FIS harness connector and the terminal A 23(21) of SRSCM harness connector.

   2) Measure resistance between the terminal 2 of FIS harness connector and the terminal A 22(20) of SRSCM harness connector.

specification(resistance) : below 1 Ω

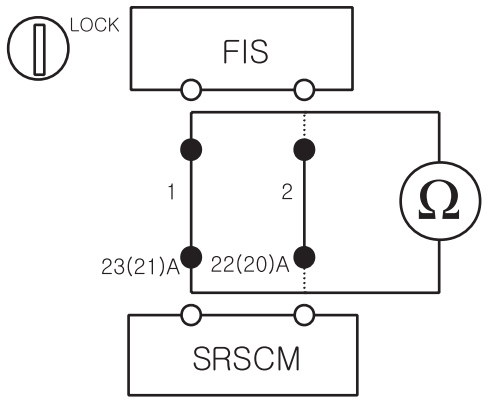

KRRE500W

Is the measured resistance within specification?

YES

▶Check Front Impact Sensor.

NO

▶ Repair or replace the wiring harness between the FIS and the SRSCM.

3. CHECK FRONT IMPACT SENSOR

   1) Replace the front impact sensor(FIS) with a new one.
      ● Refer to "Front Impact Sensor(FIS)" section in this SERVICE MANUAL.

   2) Install the DAB module and connect the DAB connector.

   3) Connect the connectors of the PAB, SAB, CAB, BPT, BUPT, FIS and SIS.

   4) Connect the SRSCM connector.

   5) Connect the negative (-) terminal to the battery.

   6) Connect a Hi-Scan(Pro) to the data link connector.

   7) Turn the ignition switch to ON and check the vehicle again.
      Does Hi-Scan (Pro) indicate any DTC related to FIS?

YES

▶ Go to next step.

NO

▶ Replace the Front Impact Sensor(FIS).

4. CLEAR THE DTC AND CHECK THE VEHICLE AGAIN

1) Install the DAB module and connect the DAB connector.

2) Connect the connectors of the PAB, SAB, CAB ,BPT, BUPT, FIS and SIS.

3) Connect the SRSCM connector.

4) Connect the negative (-) terminal to the battery.

5) Connect a Hi-Scan(Pro) to the data link connector.

6) Turn the ignition switch to ON .

7) Clear the DTC stored in the SRSCM memory with the Hi-Scan(Pro).

8) Turn the ignition switch to LOCK and wait for at least 30 seconds.

9) Turn the ignition switch to ON and wait for at least 30 seconds.

10) Check the vehicle again with the Hi-Scan(Pro).
Does the above DTC(s) go off?

YES

▶ Problem is intermittent or was repaired and SRSCM memory was not cleared.

NO

▶Replace the SRSCM with a new one, and then check the vehicle again. At this time, if the vehicle normally operates with a new SRSCM, the fault may be the SRSCM(Replace SRSCM).

DTC B1346 DAB RESISTANCE TOO HIGH
DTC B1347 DAB RESISTANCE TOO LOW

DTC DESCRIPTION EF28CD7E

The Driver Airbag circuit consists of the SRSCM, Clockspring and the Driver Airbag (DAB) which has two squib circuits. The SRSCM sets above DTC(s) if it detects that the resistance of DAB squib is too high or low.

DTC DETECTING CONDITION E2CAEBCA

DTC	Condition	Probable cause
B1346 B1347	• Too high or low resistance between DAB high(+) and DAB low (-) • Driver Airbag (DAB) Malfunction • Clockspring Malfunction • SRSCM Malfunction	• Open or short circuit on wiring harness • Driver Airbag (DAB) squib • Clockspring • SRSCM

SCHEMATIC DIAGRAM E04A4115

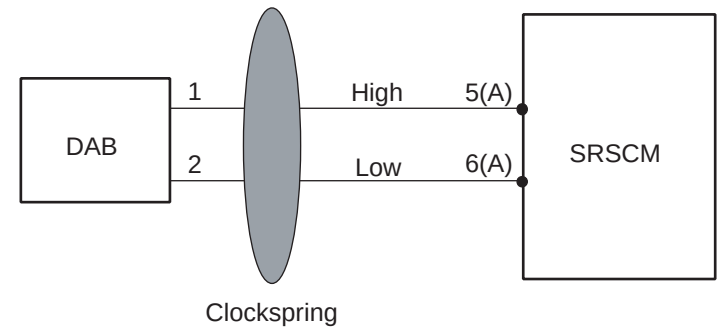

Terminal	Connected to	Function
1	SRSCM Terminal 5(A)	DAB High
2	SRSCM Terminal 6(A)	DAB Low

[HARNESS CONNECTOR]

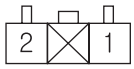

DAB

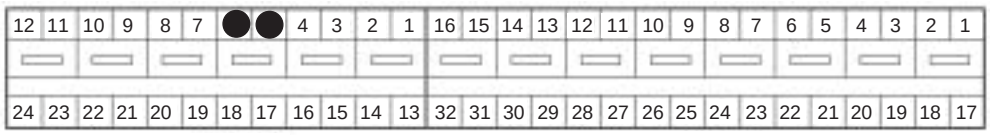

connector A connector B

Shorting bar

ERRF500S

SPECIFICATION EC7AAD74

DAB resistance : 1.9 ≤ R ≤ 3.0 Ω

TERMINAL & CONNECTOR INSPECTION EAB1E3FD

Refer to DTC B1101.

INSPECTION PROCEDURE E09E2AEF

1. PREPARATION
   Refer to DTC B1101.

2. CHECK DAB RESISTANCE

   CAUTION

   Never attempt to measure the circuit resistance of the airbag module(squib) even if you are using the specified tester.

   1) Connect the Dummy and the Dummy Adapter on DAB harness connector.
      ●Refer to "SPECIAL SERVICE TOOL" section in this SERVICE MANUAL for the SST No. of Dummy and Dummy Adapter.

   2) Measure resistance between the terminal 5 and 6 of SRSCM harness connector(A).

DAB resistance : 1.9 ≤ R ≤ 3.0 Ω

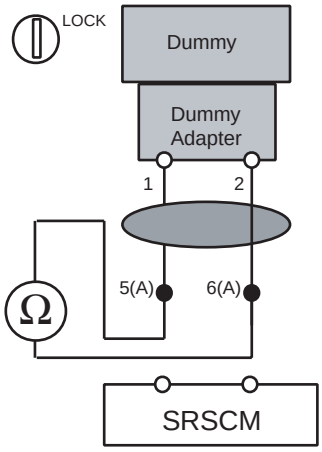

ERRF500T

   3) Is the measured resistance within specification?

   NO

   ▶ Check open circuit.

   YES

   ▶ Replace the Driver Airbag(DAB) module.

3. CHECK OPEN CIRCUIT

   1) Measure resistance between the terminal 1 of DAB harness connector and the terminal 5 of SRSCM harness connector(A).

   2) Measure resistance between the terminal 2 of DAB harness connector and the terminal 6 of SRSCM harness connector(A).

specification(resistance) : below 1 Ω

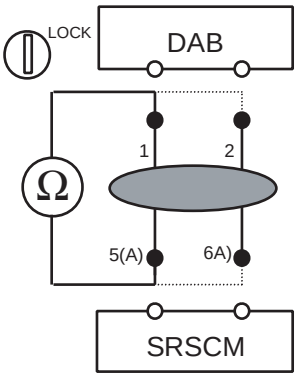

ERRF501X

Is the measured resistance within specification?

YES

▶ Check short circuit.

NO

▶ Repair or replace the wiring harness between the DAB and the clockspring or between the clockspring and the SRSCM.

4. CHECK SHORT CIRCUIT

1) Measure resistance between the terminal 1 and 2 of DAB harness connector.

specification(resistance) : ∞ Ω

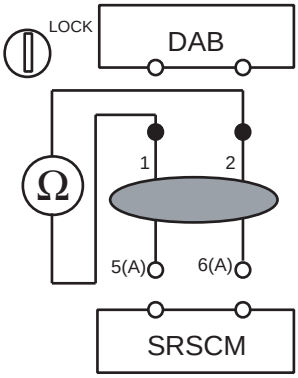

ERRF501Y

Is the measured resistance within specification?

YES

▶ Go to next step.

NO

▶ Repair or replace the wiring harness between the DAB and the clockspring or between the clockspring and the SRSCM.

5. CLEAR THE DTC AND CHECK THE VEHICLE AGAIN
Refer to DTC B1328.

DTC B1348 DAB SHORT TO GROUND

DTC DESCRIPTION ECABC71F

The Driver Airbag circuit consists of the SRSCM, Clockspring and the Driver Airbag (DAB) which has two squib circuits. The SRSCM sets above DTC(s) if it detects short to ground on the DAB circuit.

DTC DETECTING CONDITION E62E8C0E

DTC	Condition	Probable cause
B1348	• Short to ground between DAB and clockspring • Short to ground between clockspring and SRSCM • Driver Airbag (DAB) Malfunction • Clockspring Malfunction • SRSCM Malfunction	• Short to ground circuit on wiring harness • Driver Airbag (DAB) squib • Clockspring • SRSCM

SCHEMATIC DIAGRAM E63700C6

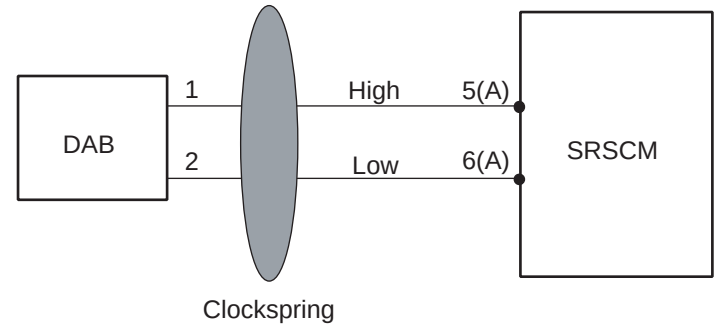

Terminal	Connected to	Function
1	SRSCM Terminal 5(A)	DAB High
2	SRSCM Terminal 6(A)	DAB Low

[HARNESS CONNECTOR]

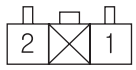

DAB

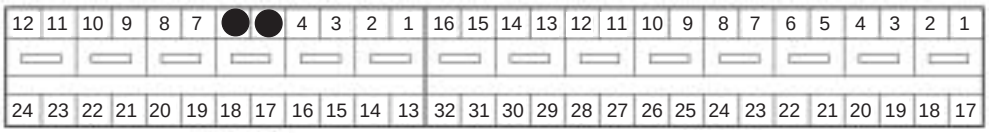

connector A connector B

Shorting bar

ERRF500S

TERMINAL & CONNECTOR INSPECTION ECE01E5D

Refer to DTC B1101.

INSPECTION PROCEDURE EEC36C5A

1. PREPARATION
   Refer to DTC B1101.

2. CHECK SHORT TO GROUND

   1) Measure resistance between the terminal 1 of DAB harness connector and chassis ground.

specification(resistance) : infinite

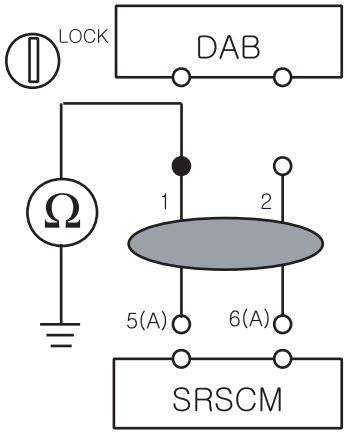

KRRE501B

   2) Is the measured resistance within specification?

   YES

   ▶Check the DAB Module.

   NO

   ▶ Repair or replace the wiring harness between the DAB and the clockspring or between the clockspring and the SRSCM.

3. CHECK THE DAB MODULE

   1) Replace the Driver Airbag(DAB) with a new one.
      ● Refer to "Driver Airbag(DAB)" section in this SERVICE MANUAL.

   2) Install the DAB module and connect the DAB connector.

   3) Connect the connectors of the PAB, SAB, CAB, BPT, BUPT, FIS and SIS.

   4) Connect the SRSCM connector.

   5) Connect the negative (-) terminal to the battery.

   6) Connect a Hi-Scan(Pro) to the data link connector.

   7) Turn the ignition switch to ON and check the vehicle again.
      Does Hi-Scan (Pro) indicate any DTC related to DAB?

   YES

   ▶Check the clockspring.

NO

▶Replace the Driver Airbag(DAB).

4. CHECK THE CLOCKSPRING

   1) Check the clockspring.
      Is the clockspring normal?

YES

▶ Go to next step.

NO

▶ Replace the clockspring.

5. CLEAR THE DTC AND CHECK THE VEHICLE AGAIN
   Refer to DTC B1328.

DTC B1349 DAB SHORT TO BATTERY

DTC DESCRIPTION ED17F5F6

The Driver Airbag circuit consists of the SRSCM, Clockspring and the Driver Airbag (DAB) which has two squib circuits. The SRSCM sets above DTC(s) if it detects short to battery line on the DAB circuit.

DTC DETECTING CONDITION ED438521

DTC	Condition	Probable cause
B1349	• Short to battery line between DAB and clockspring • Short to battery line between clockspring and SRSCM • Driver Airbag (DAB) Malfunction • Clockspring Malfunction • SRSCM Malfunction	• Short to battery line on wiring harness • Driver Airbag (DAB) squib • Clockspring • SRSCM

SCHEMATIC DIAGRAM EEBD95F6

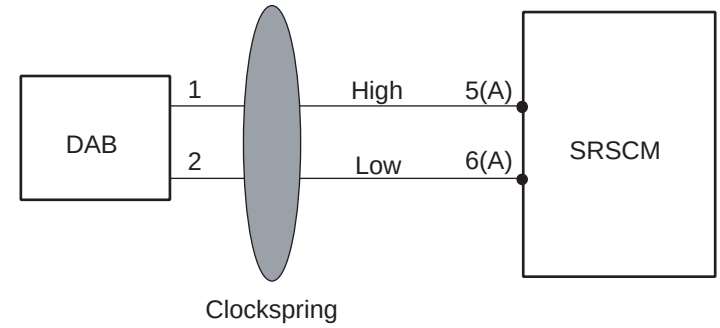

Terminal	Connected to	Function
1	SRSCM Terminal 5(A)	DAB High
2	SRSCM Terminal 6(A)	DAB Low

[HARNESS CONNECTOR]

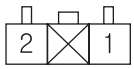

DAB

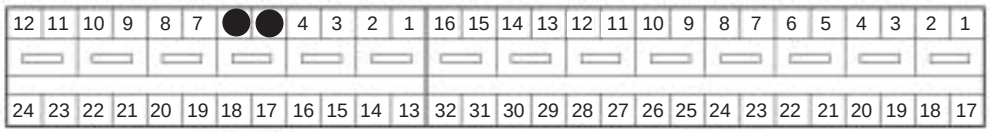

connector A connector B

Shorting bar

ERRF500S

TERMINAL & CONNECTOR INSPECTION EBB49D6E

Refer to DTC B1101.

INSPECTION PROCEDURE EFDAC71A

1. PREPARATION
   Refer to DTC B1101.

2. CHECK SHORT TO BATTERY LINE

   1) Connect the negative (-) terminal to the battery.

   2) Turn the ignition switch to ON.

   3) Measure voltage between the terminal 1 of DAB harness connector and chassis ground(-).

specification(voltage) : Approximately 0 V

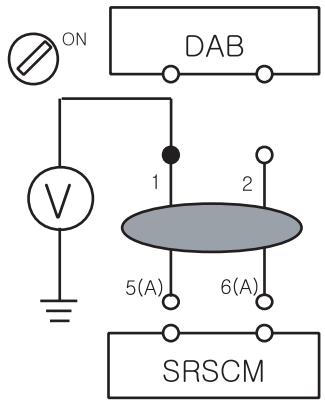

KRRE501C

Is the measured voltage within specification?

YES

▶Check the DAB module.

NO

▶ Repair or replace the wiring harness between the DAB and the clockspring or between the clockspring and the SRSCM.

3. CHECK THE DAB MODULE

   1) Replace the Driver Airbag(DAB) with a new one.
      ● "Refer to "Driver Airbag(DAB)" section in this SERVICE MANUAL.

   2) Install the DAB module and connect the DAB connector.

   3) Connect the connectors of the PAB, SAB, CAB, BPT, BUPT, FIS and SIS.

   4) Connect the SRSCM connector.

   5) Connect the negative (-) terminal to the battery.

   6) Connect a Hi-Scan(Pro) to the data link connector.

   7) Turn the ignition switch to ON and check the vehicle again.
      Does Hi-Scan (Pro) indicate any DTC related to DAB?

YES

▶Check the clockspring.

NO

▶Replace the Driver Airbag(DAB).

4. CHECK THE CLOCKSPRING

   1) Check the clockspring.
      Is the clockspring normal?

   YES

   ▶ Go to next step.

   NO

   ▶ Replace the clockspring.

5. CLEAR THE DTC AND CHECK THE VEHICLE AGAIN
   Refer to DTC B1328.

DTC B1352 PAB RESISTANCE TOO HIGH
DTC B1353 PAB RESISTANCE TOO LOW

DTC DESCRIPTION EE3A29BA

The Passenger Airbag circuit consists of the SRSCM and the Passenger Airbag (PAB) which has two squib circuits. The SRSCM sets above DTC(s) if it detects that the resistance of PAB squib is too high or low.

DTC DETECTING CONDITION EDF04DDA

DTC	Condition	Probable cause
B1352 B1353	• Too high or low resistance between PAB high(+) and PAB low (-) • Passenger Airbag (PAB) Malfunction • SRSCM Malfunction	• Open or short circuit on wiring harness • Passenger Airbag (PAB) squib • SRSCM

SCHEMATIC DIAGRAM E503CC9E

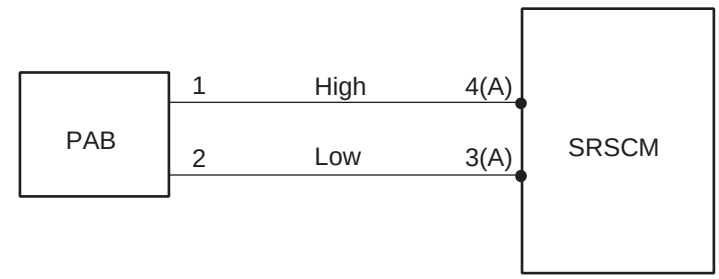

Terminal	Connected to	Function
1	SRSCM Terminal 4(A)	PAB High
2	SRSCM Terminal 3(A)	PAB Low

[HARNESS CONNECTOR]

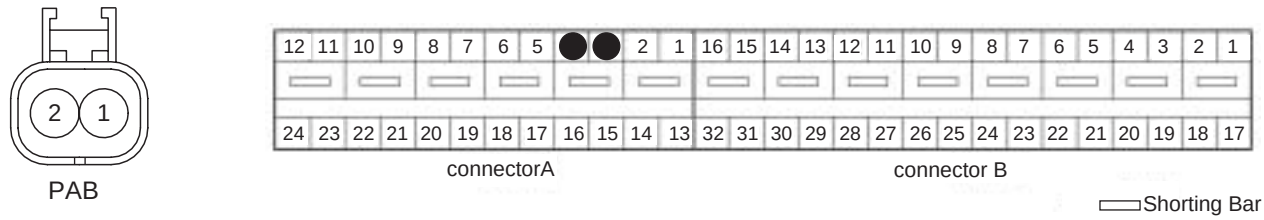

ERRF500U

SPECIFICATION EAD8F2A9

PAB resistance : 1.8 ≤ R ≤ 2.4 Ω

TERMINAL & CONNECTOR INSPECTION EDD449FA

Refer to DTC B1101.

INSPECTION PROCEDURE EE6FACD8

1. PREPARATION
   Refer to DTC B1101.

2. CHECK PAB RESISTANCE

   CAUTION

   Never attempt to measure the circuit resistance of the airbag module(squib) even if you are using the specified tester.

   1) Connect the Dummy and the Dummy Adapter on PAB harness connector.
      ● Refer to "SPECIAL SERVICE TOOL" section in this SERVICE MANUAL for the SST No. of Dummy and Dummy Adapter.

   2) Measure resistance between the terminal 4 and 3 of SRSCM harness connector(A).

PAB resistance : 1.8 ≤ R ≤ 2.4 Ω

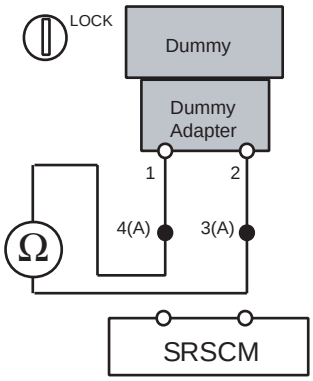

ERRF500V

   3) Is the measured resistance within specification?

   YES

   ▶ Replace the Passenger Airbag(PAB) module.

   NO

   ▶ Check open circuit.

3. CHECK OPEN CIRCUIT

   1) Measure resistance between the terminal 1 of PAB harness connector and the terminal 4 of SRSCM harness connector(A).

   2) Measure resistance between the terminal 2 of PAB harness connector and the terminal 3 of SRSCM harness connector(A).

specification(resistance) : below 1 Ω

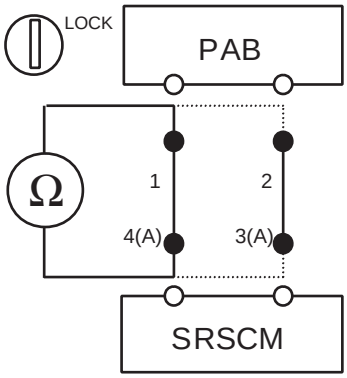

ERRF501Z

Is the measured resistance within specification?

YES

▶Check short circuit.

NO

▶Repair or replace the wiring harness between the PAB and the SRSCM.

4. CHECK SHORT CIRCUIT

1) Measure resistance between the terminal 1 and 2 of PAB harness connector.

specification(resistance) : infinite

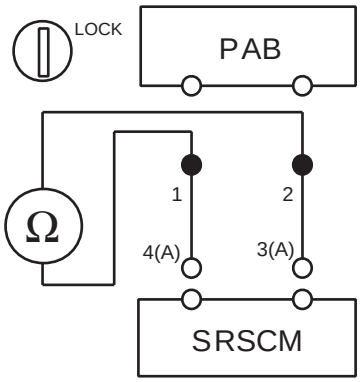

ERRF502A

Is the measured resistance within specification?

YES

▶ Go to next step.

NO

▶ Repair or replace the wiring harness between the PAB and the SRSCM.

5. CLEAR THE DTC AND CHECK THE VEHICLE AGAIN
Refer to DTC B1328.

DTC B1354 PAB SHORT TO GROUND

DTC DESCRIPTION E7E31BC1

The Passenger Airbag circuit consists of the SRSCM and the Passenger Airbag (PAB) which has two squib circuits. The SRSCM sets above DTC(s) if it detects short to ground on the PAB circuit.

DTC DETECTING CONDITION E6CBAC21

DTC	Condition	Probable cause
B1354	• Short to ground between PAB module and SRSCM • Passenger Airbag (PAB) Malfunction • SRSCM Malfunction	• Short to ground on wiring harness • Passenger Airbag (PAB) squib • SRSCM

SCHEMATIC DIAGRAM E8E467A0

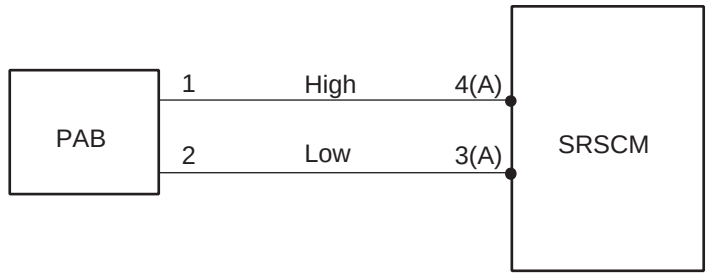

Terminal	Connected to	Function
1	SRSCM Terminal 4(A)	PAB High
2	SRSCM Terminal 3(A)	PAB Low

[HARNESS CONNECTOR]

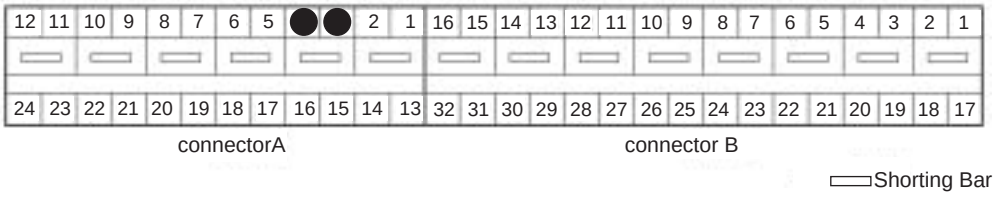

ERRF500U

TERMINAL & CONNECTOR INSPECTION ECD0CB2A

Refer to DTC B1101.

INSPECTION PROCEDURE E49C26FD

1. PREPARATION
   Refer to DTC B1101.

2. CHECK SHORT TO GROUND

   1) Measure resistance between the terminal 1 of PAB harness connector and chassis ground.

specification(resistance) : infinite

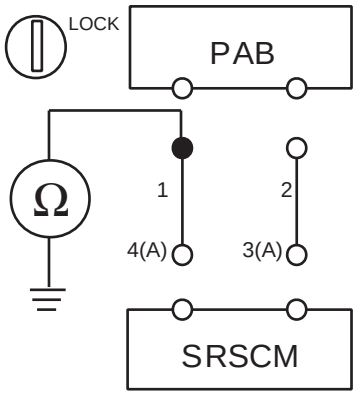

KRRE501H

Is the measured resistance within specification?

YES

▶ Check the PAB Module.

NO

▶ Repair or replace the wiring harness between the PAB and the SRSCM.

3. CHECK THE PAB MODULE

1) Replace the Passenger Airbag (PAB) with a new one.
● Refer to "Passenger Airbag (PAB)" section in this SERVICE MANUAL.

2) Install the DAB module and connect the DAB connector.

3) Connect the connectors of the PAB, SAB, CAB, BPT, BUPT, FIS and SIS.

4) Connect the SRSCM connector.

5) Connect the negative (-) terminal to the battery.

6) Connect a Hi-Scan(Pro) to the data link connector.

7) Turn the ignition switch to ON and check the vehicle again.
Does Hi-Scan (Pro) indicate any DTC related to PAB?

YES

▶ Go to next step.

NO

▶Replace PAB module.

4. CLEAR THE DTC AND CHECK THE VEHICLE AGAIN
Refer to DTC B1328.

DTC B1355 PAB SHORT TO BATTERY

DTC DESCRIPTION E0BB4600

The Passenger Airbag circuit consists of the SRSCM and the Passenger Airbag (PAB) which has two squib circuits.The SRSCM sets above DTC(s) if it detects short to battery line on the PAB circuit.

DTC DETECTING CONDITION E0C2BED3

DTC	Condition	Probable cause
B1355	• Short to battery line between PAB and SRSCM • Passenger Airbag (PAB) Malfunction • SRSCM Malfunction	• Short to battery line circuit on wiring harness • Passenger Airbag (PAB) squib • SRSCM

SCHEMATIC DIAGRAM E9A41E7E

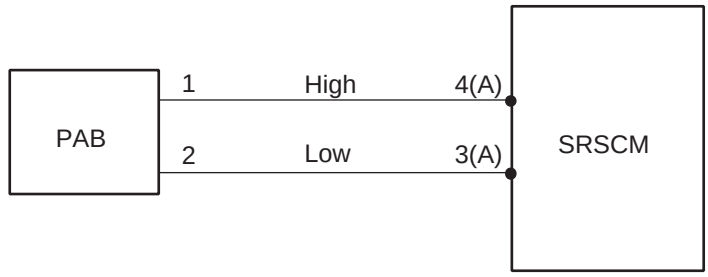

Terminal	Connected to	Function
1	SRSCM Terminal 4(A)	PAB High
2	SRSCM Terminal 3(A)	PAB Low

[HARNESS CONNECTOR]

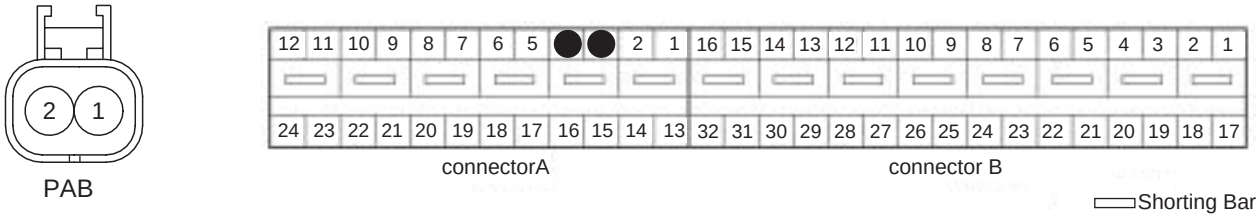

ERRF500U

TERMINAL & CONNECTOR INSPECTION EA801E7B

Refer to DTC B1101.

INSPECTION PROCEDURE EADC4D4B

1. PREPARATION
   Refer to DTC B1101.

2. CHECK SHORT TO BATTERY LINE

   1) Connect the negative (-) terminal to the battery.

   2) Turn the ignition switch to ON.

3) Measure voltage between the terminal 1 of PAB harness connector and chassis ground(-).

specification(voltage) : Approximately 0 V

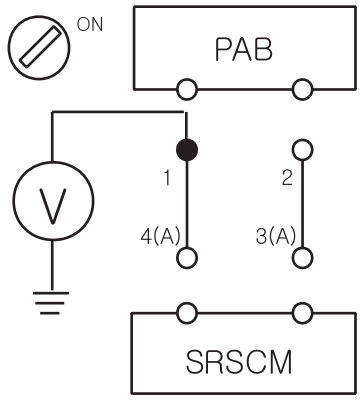

KRRE501I

Is the measured voltage within specification?

YES

▶ Check the PAB Module.

NO

▶ Repair the short to battery line circuit on wiring harness between the PAB and the SRSCM.

3. CHECK THE PAB MODULE

1) Replace the Passenger Airbag(PAB) with a new one.
● Refer to "Passenger Airbag(PAB)" section in this SERVICE MANUAL.

2) Install the DAB module and connect the DAB connector.

3) Connect the connectors of the PAB, SAB, CAB, BPT, BUPT, FIS and SIS.

4) Connect the SRSCM connector.

5) Connect the negative (-) terminal to the battery.

6) Connect a Hi-Scan(Pro) to the data link connector.

7) Turn the ignition switch to ON and check the vehicle again.
Does Hi-Scan (Pro) indicate any DTC related to PAB?

YES

▶ Go to next step.

NO

▶Replace PAB module.

4. CLEAR THE DTC AND CHECK THE VEHICLE AGAIN
Refer to DTC B1328.

DTC B1361 DBPT RESISTANCE TOO HIGH
DTC B1362 DBPT RESISTANCE TOO LOW
DTC B1367 PBPT RESISTANCE TOO HIGH
DTC B1368 PBPT RESISTANCE TOO LOW

DTC DESCRIPTION EA2F8A1D

The Seat Belt Pretensioner circuit consists of the SRSCM and two Seat Belt Pretensioner (BPT).
The SRSCM sets above DTC(s) if it detects that the resistance of BPT squib is too high or low.

DTC DETECTING CONDITION EA76F757

DTC	Condition	Probable cause
B1361 B1362 B1367 B1368	• Too high or low resistance between BPT high(+) and BPT low (-) • Seat Belt Pretensioner (BPT) Malfunction • SRSCM Malfunction	• Open or short circuit on wiring harness • Seat Belt Pretensioner (BPT) squib • SRSCM

SCHEMATIC DIAGRAM E4D00870

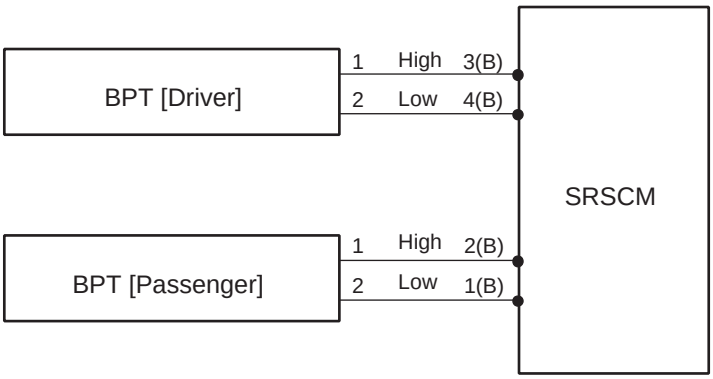

BPT [Driver]

Terminal	Connected to	Function
1	SRSCM Terminal 3(B)	BPT High
2	SRSCM Terminal 4(B)	BPT Low

BPT [Passenger]

Terminal	Connected to	Function
1	SRSCM Terminal 2(B)	BPT High
2	SRSCM Terminal 1(B)	BPT Low

[HARNESS CONNECTOR]

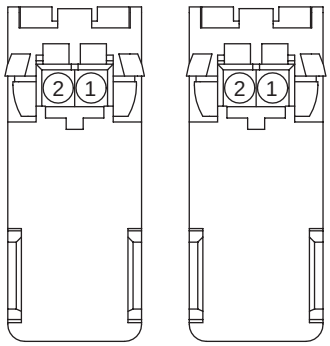

BPT[Driver] BPT[Passenger]

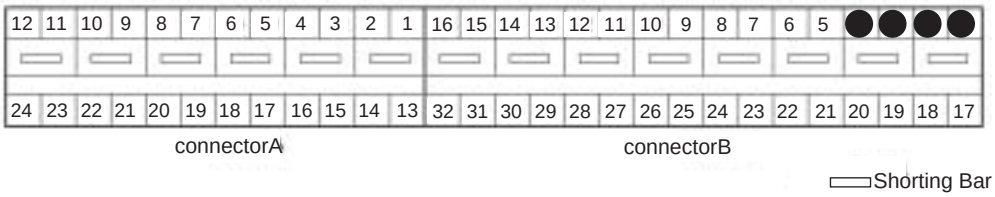

ERRF500W

SPECIFICATION E95DCAFF

BPT resistance : 1.9 ≤ R ≤ 2.8 Ω

TERMINAL & CONNECTOR INSPECTION E8CF8B0C

Refer to DTC B1101.

INSPECTION PROCEDURE EB321D77

1. PREPARATION
   Refer to DTC B1101.

2. CHECK BPT RESISTANCE

   ⚠ ***CAUTION***

   Never attempt to measure the circuit resistance of the airbag module(squib) even if you are using the specified tester.

   1) Connect the Dummy and the Dummy Adapter on BPT harness connector.
      ● Refer to "SPECIAL SERVICE TOOL" section in this SERVICE MANUAL for the SST No. of Dummy and Dummy Adapter.

   2) Measure resistance between the terminal 3(2) and 4(1) of SRSCM harness connector(B).

BPT resistance : 1.9 ≤ R ≤ 2.8 Ω

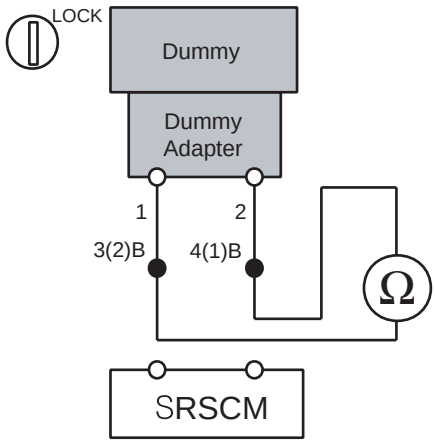

ERRF500X

Is the measured resistance within specification?

YES

▶ Replace the Seat Belt Pretensioner(BPT) module.

NO

▶Check open circuit.

3. CHECK OPEN CIRCUIT

1) Measure resistance between the terminal 1 of BPT harness connector and the terminal 3(2) of SRSCM harness connector(B).

2) Measure resistance between the terminal 2 of BPT harness connector and the terminal 4(1) of SRSCM harness connector(B).

specification(resistance) : below 1 Ω

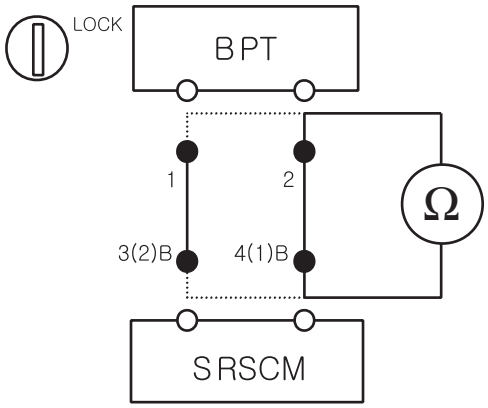

KRRE501L

Is the measured resistance within specification?

YES

▶ Check short circuit.

NO

▶ Repair or replace the wiring harness between the BPT and the SRSCM.

4. CHECK SHORT CIRCUIT

1) Measure resistance between the terminal 1 and 2 of BPT harness connector.

specification(resistance) : infinite

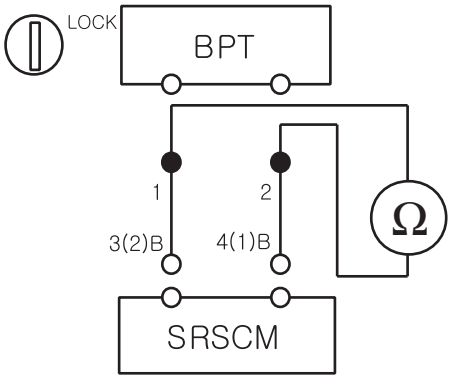

KRRE501M

Is the measured resistance within specification?

YES

▶ Go to next step.

NO

▶ Repair or replace the wiring harness between the BPT and the SRSCM.

5. CLEAR THE DTC AND CHECK THE VEHICLE AGAIN
   Refer to DTC B1328.

DTC B1363 DBPT SHORT TO GROUND
DTC B1369 PBPT SHORT TO GROUND

DTC DESCRIPTION E312069A

The Seat Belt Pretensioner consists of the SRSCM and two Seat Belt Pretensioner (BPT).The SRSCM sets above DTC(s) if it detects short to ground on the BPT circuit.

DTC DETECTING CONDITION E5784C4E

DTC	Condition	Probable cause
B1363 B1369	• Short to ground between BPT and SRSCM • Seat Belt Pretensioner (BPT) Malfunction • SRSCM Malfunction	• Short to ground circuit on wiring harness • Seat Belt Pretensioner (BPT) squib • SRSCM

SCHEMATIC DIAGRAM E3AB1944

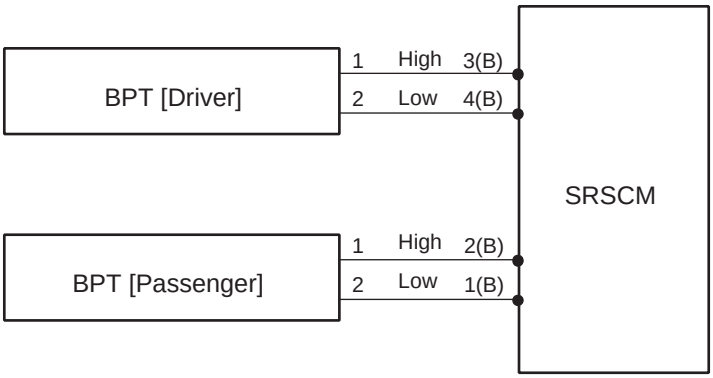

BPT [Driver]

Terminal	Connected to	Function
1	SRSCM Terminal 3(B)	BPT High
2	SRSCM Terminal 4(B)	BPT Low

BPT [Passenger]

Terminal	Connected to	Function
1	SRSCM Terminal 2(B)	BPT High
2	SRSCM Terminal 1(B)	BPT Low

[HARNESS CONNECTOR]

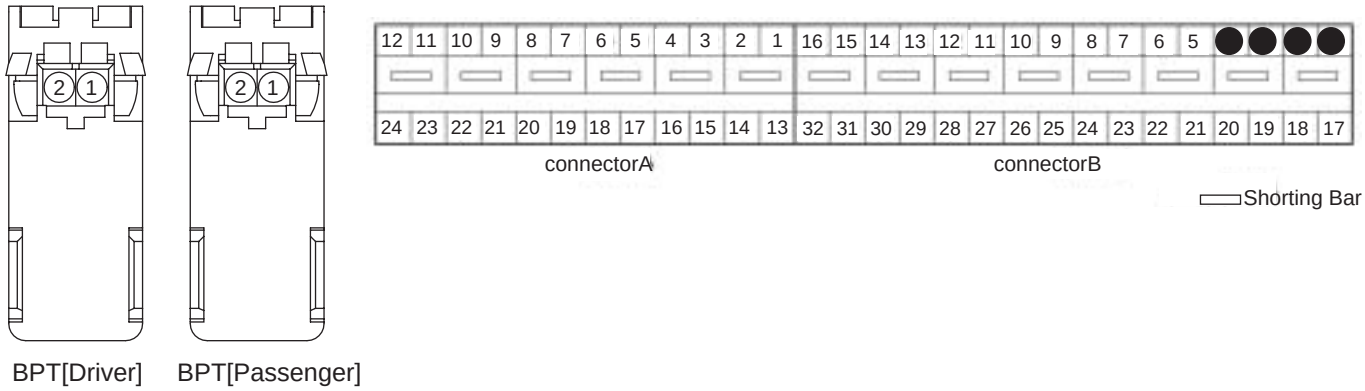

ERRF500W

TERMINAL & CONNECTOR INSPECTION E25EEB75

Refer to DTC B1101.

INSPECTION PROCEDURE E3DEB17E

1. PREPARATION
   Refer to DTC B1101.

2. CHECK SHORT TO GROUND

   1) Measure resistance between the terminal 1 of BPT harness connector and chassis ground.

specification(resistance) : infinite

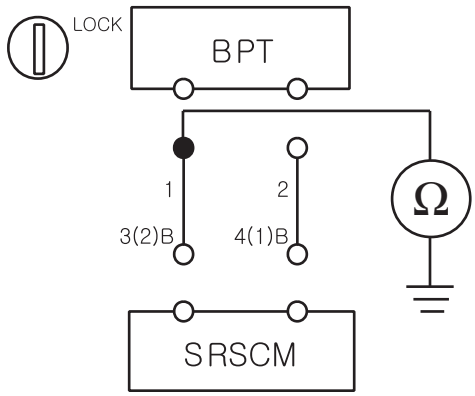

KRRE501N

Is the measured resistance within specification?

YES

▶Check the BPT Module.

NO

▶ Repair or replace the wiring harness between the BPT and the SRSCM.

3. CHECK THE BPT MODULE

   1) Replace the Belt Pretensioner (BPT) with a new one.
      ● Refer to "Belt Pretensioner (BPT)" section in this SERVICE MANUAL.

   2) Install the DAB module and connect the DAB connector.

   3) Connect the connectors of the PAB, SAB, CAB, BPT, BUPT, FIS and SIS.

   4) Connect the SRSCM connector.

   5) Connect the negative (-) terminal to the battery.

   6) Connect a Hi-Scan(Pro) to the data link connector.

   7) Turn the ignition switch to ON and check the vehicle again.
      Does Hi-Scan (Pro) indicate any DTC related to Belt Pretensioner (BPT)?

      YES

      ▶Go to next step.

NO

▶Replace BPT module.

4. CLEAR THE DTC AND CHECK THE VEHICLE AGAIN
   Refer to DTC B1328.

DTC B1364 DBPT SHORT TO BATTERY
DTC B1370 PBPT SHORT TO BATTERY

DTC DESCRIPTION E5F2C7D6

The Seat Belt Pretensioner consists of the SRSCM and two Seat Belt Pretensioner (BPT). The SRSCM sets above DTC(s) if it detects short to battery line on the BPT circuit.

DTC DETECTING CONDITION EB2DE9DA

DTC	Condition	Probable cause
B1364 B1370	• Short to battery line between BPT and SRSCM • Seat Belt Pretensioner (BPT) Malfunction • SRSCM Malfunction	• Short to battery line circuit on wiring harness • Seat Belt Pretensioner (BPT) squib • SRSCM

SCHEMATIC DIAGRAM EDF20AF2

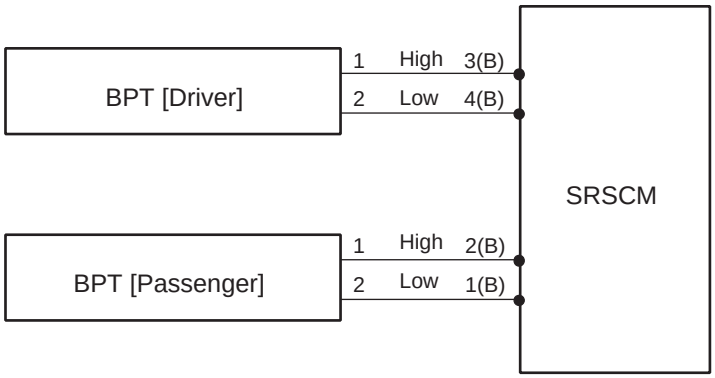

BPT [Driver]

Terminal	Connected to	Function
1	SRSCM Terminal 3(B)	BPT High
2	SRSCM Terminal 4(B)	BPT Low

BPT [Passenger]

Terminal	Connected to	Function
1	SRSCM Terminal 2(B)	BPT High
2	SRSCM Terminal 1(B)	BPT Low

[HARNESS CONNECTOR]

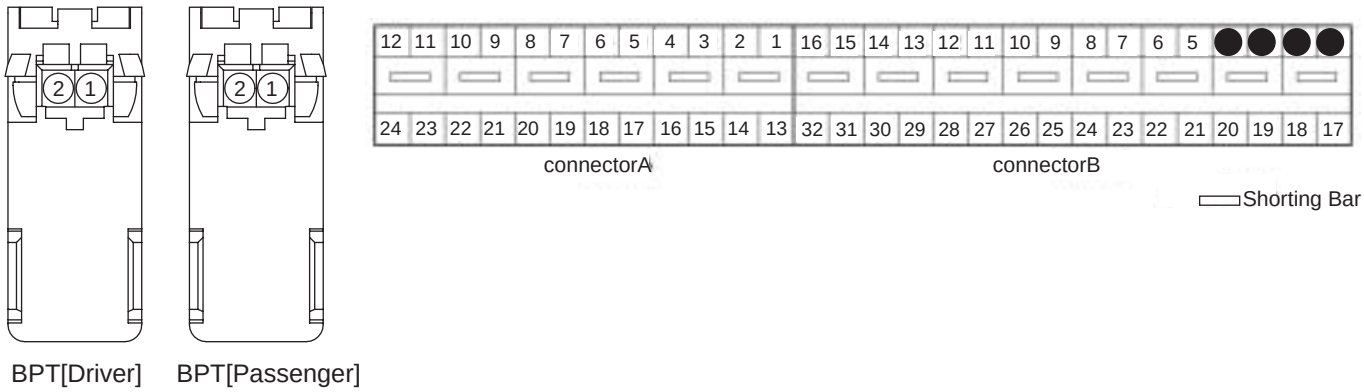

ERRF500W

TERMINAL & CONNECTOR INSPECTION E21F1B8F

Refer to DTC B1101.

INSPECTION PROCEDURE EFC5DC6E

1. PREPARATION
   Refer to DTC B1101.

2. CHECK SHORT TO BATTERY LINE

   1) Connect the negative (-) terminal to the battery.

   2) Turn the ignition switch to ON.

   3) Measure voltage between the terminal 1 of BPT harness connector and chassis ground(-).

specification(voltage) : Approximately 0 V

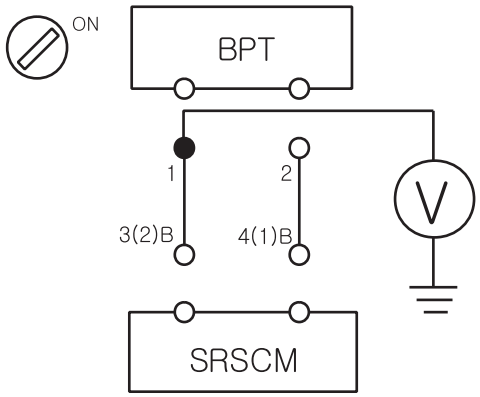

KRRE501O

Is the measured voltage within specification?

YES

▶Check the BPT Module.

NO

▶Repair the short to battery line circuit on wiring harness between the BPT and the SRSCM.

3. CHECK THE BPT MODULE

   1) Replace the Belt Pretensioner (BPT) with a new one.
      ● Refer to "Belt Pretensioner (BPT)" section in this SERVICE MANUAL.

   2) Install the DAB module and connect the DAB connector.

   3) Connect the connectors of the PAB, SAB, CAB, BPT, BUPT, FIS and SIS.

   4) Connect the SRSCM connector.

   5) Connect the negative (-) terminal to the battery.

   6) Connect a Hi-Scan(Pro) to the data link connector.

   7) Turn the ignition switch to ON and check the vehicle again.
      Does Hi-Scan (Pro) indicate any DTC related to Belt Pretensioner (BPT)?

YES

▶ Go to next step.

NO

▶Replace BPT module.

4. CLEAR THE DTC AND CHECK THE VEHICLE AGAIN
   Refer to DTC B1328.

DTC B1378 DSAB RESISTANCE TOO HIGH
DTC B1379 DSAB RESISTANCE TOO LOW
DTC B1382 PSAB RESISTANCE TOO HIGH
DTC B1383 PSAB RESISTANCE TOO LOW

DTC DESCRIPTION EFD1E4F6

The Side Airbag circuit consists of the SRSCM and two Side Airbag (SAB). The SRSCM sets above DTC(s) if it detects that the resistance of SAB squib is too high or low.

DTC DETECTING CONDITION EFE6DFCF

DTC	Condition	Probable cause
B1378 B1379 B1382 B1383	• Too high or low resistance between SAB high(+) and SAB low (-) • Side Airbag (SAB) Malfunction • SRSCM Malfunction	• Open or short circuit on wiring harness • Side Airbag (SAB) squib • SRSCM

SCHEMATIC DIAGRAM EF71E8FB

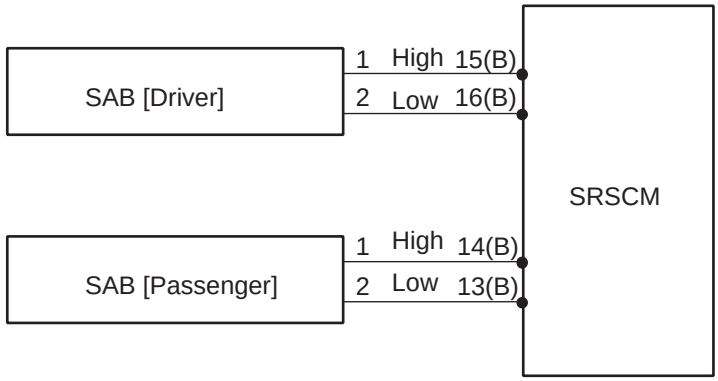

SAB [Driver]

Terminal	Connected to	Function
1	SRSCM Terminal 15(B)	SAB High
2	SRSCM Terminal 16(B)	SAB Low

SAB [Passenger]

Terminal	Connected to	Function
1	SRSCM Terminal 14(B)	SAB High
2	SRSCM Terminal 13(B)	SAB Low

[HARNESS CONNECTOR]

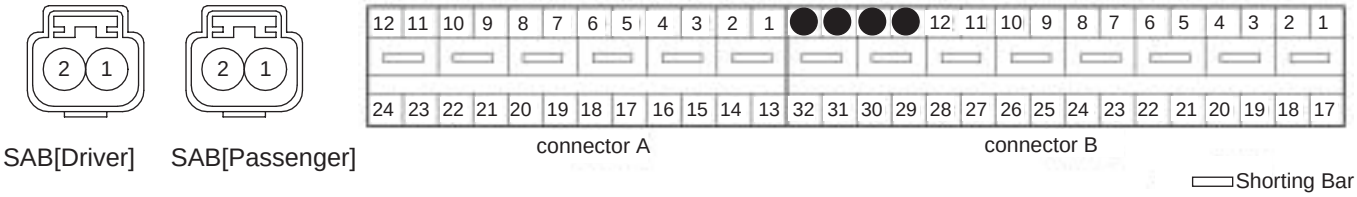

ERRF500Y

SPECIFICATION E1CDE97F

SAB resistance : 1.8 ≤ R ≤ 2.6 Ω

TERMINAL & CONNECTOR INSPECTION EEDC68ED

Refer to DTC B1101.

INSPECTION PROCEDURE E5F3E0CE

1. PREPARATION
   Refer to DTC B1101.

2. CHECK SAB RESISTANCE

   CAUTION

   Never attempt to measure the circuit resistance of the airbag module(squib) even if you are using the specified tester.

   1) Connect the Dummy and the Dummy Adapter on SAB harness connector.
      ● Refer to "SPECIAL SERVICE TOOL" section in this SERVICE MANUAL for the SST No. of Dummy and Dummy Adapter.

   2) Measure resistance between the terminal 15(14) and 16(13) of SRSCM harness connector(B).

SAB resistance : 1.8 ≤ R ≤ 2.6 Ω

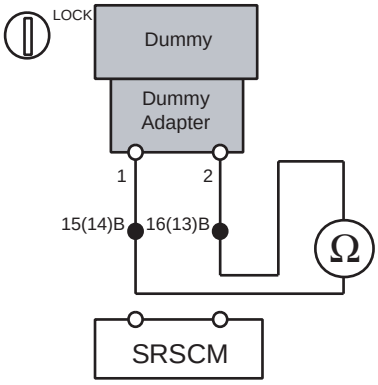

ERRF500Z

Is the measured resistance within specification?

YES

▶Replace the Side Airbag(SAB) module.

NO

▶Check open circuit.

3. CHECK OPEN CIRCUIT

   1) Measure resistance between the terminal 1 of SAB harness connector and the terminal 15(14) of SRSCM harness connector(B).

   2) Measure resistance between the terminal 2 of SAB harness connector and the terminal 16(13) of SRSCM harness connector(B).

specification(resistance) : below 1 Ω

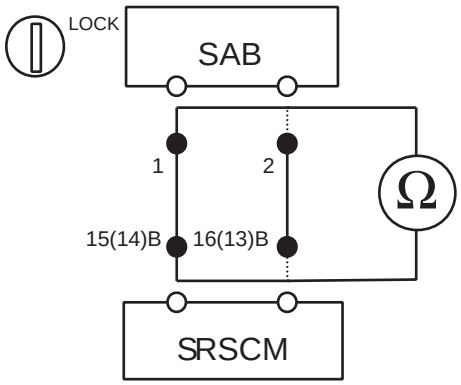

ERRF502B

Is the measured resistance within specification?

YES

▶Check short circuit.

NO

▶Repair or replace the wiring harness between the SAB nd the SRSCM.

4. CHECK SHORT CIRCUIT

1) Measure resistance between the terminal 1 and 2 of SAB harness connector.

specification(resistance) : infinite

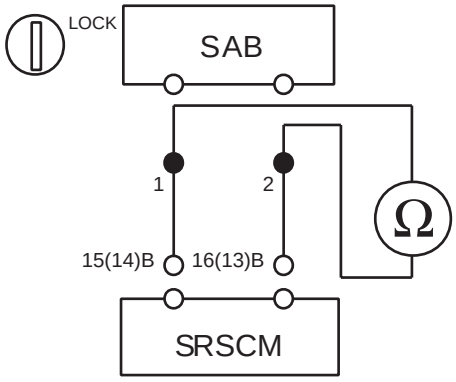

ERRF502C

Is the measured resistance within specification?

YES

▶ Go to next step.

NO

▶ Repair or replace the wiring harness between the SAB and the SRSCM.

5. CLEAR THE DTC AND CHECK THE VEHICLE AGAIN
Refer to DTC B1328.

DTC B1380 DSAB SHORT TO GROUND
DTC B1384 PSAB SHORT TO GROUND

DTC DESCRIPTION EDD9EE1F

The Side Airbag circuit consists of the SRSCM and two Side Airbag (SAB). The SRSCM sets above DTC(s) if it detects short to ground on the SAB circuit.

DTC DETECTING CONDITION EE9FBB7C

DTC	Condition	Probable cause
B1380 B1384	• Short to ground between SAB and SRSCM • Side Airbag (SAB) Malfunction • SRSCM Malfunction	• Short to ground circuit on wiring harness • Side Airbag (SAB) squib • SRSCM

SCHEMATIC DIAGRAM E4077CEE

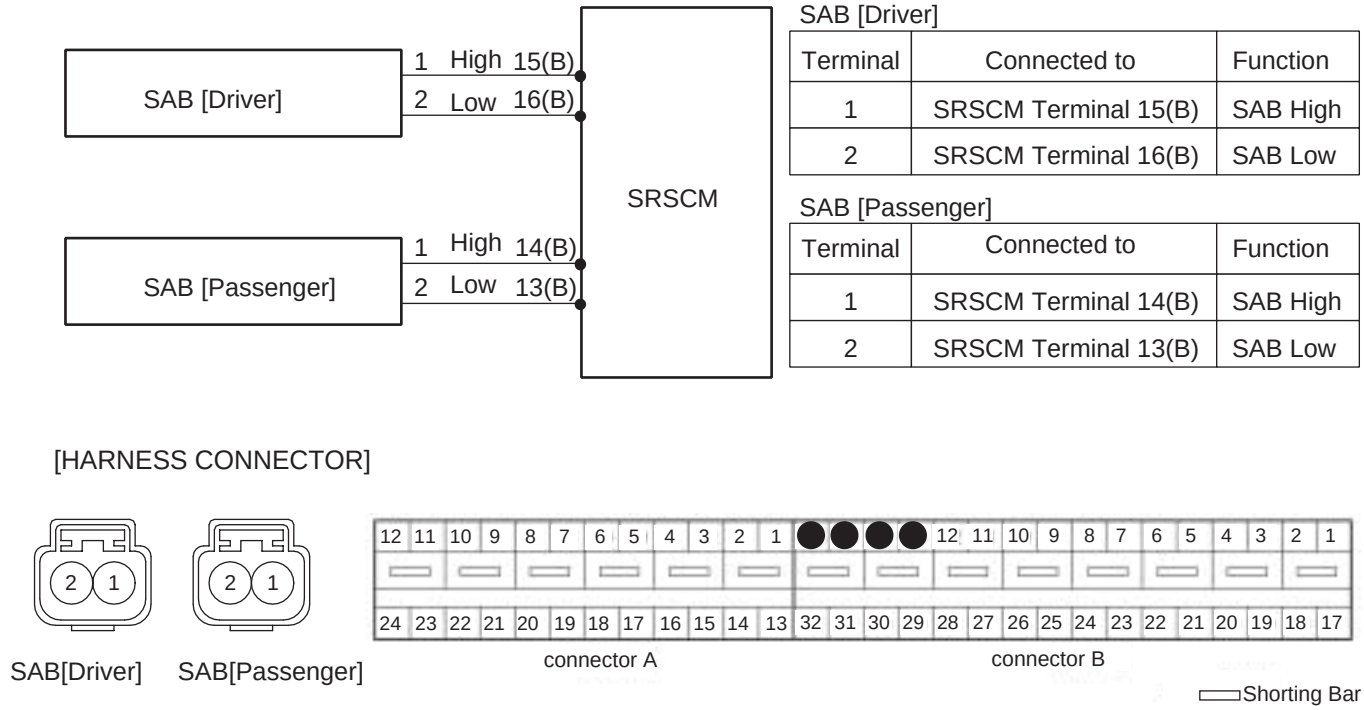

SAB [Driver]

Terminal	Connected to	Function
1	SRSCM Terminal 15(B)	SAB High
2	SRSCM Terminal 16(B)	SAB Low

SAB [Passenger]

Terminal	Connected to	Function
1	SRSCM Terminal 14(B)	SAB High
2	SRSCM Terminal 13(B)	SAB Low

ERRF500Y

TERMINAL & CONNECTOR INSPECTION EFBA87C0

Refer to DTC B1101.

INSPECTION PROCEDURE E1C360BC

1. PREPARATION
   Refer to DTC B1101.

2. CHECK SHORT TO GROUND

1) Measure resistance between the terminal 1 of SAB harness connector and chassis ground.

specification(resistance) : infinite

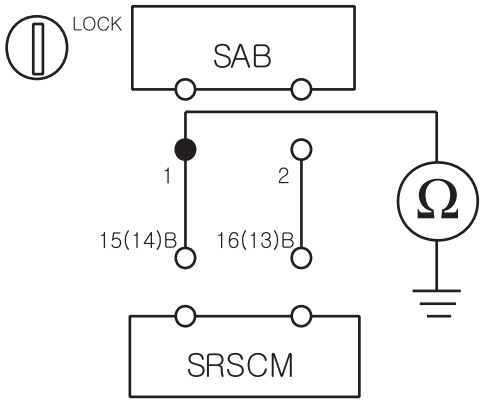

KRRE501T

Is the measured resistance within specification?

YES

▶ Check the SAB Module.

NO

▶ Repair or replace the wiring harness between the SAB and the SRSCM.

3. CHECK THE SAB MODULE

1) Replace the Side Airbag(SAB) with a new one.
● Refer to "Side Airbag(SAB)" section in this SERVICE MANUAL.

2) Install the DAB module and connect the DAB connector.

3) Connect the connectors of the PAB, SAB, CAB, BPT, BUPT, FIS and SIS.

4) Connect the SRSCM connector.

5) Connect the negative (-) terminal to the battery.

6) Connect a Hi-Scan(Pro) to the data link connector.

7) Turn the ignition switch to ON and check the vehicle again.
Does Hi-Scan (Pro) indicate any DTC related to Side Airbag(SAB)?

YES

▶Go to next step.

NO

▶Replace SAB module.

4. CLEAR THE DTC AND CHECK THE VEHICLE AGAIN
Refer to DTC B1328.

DTC B1381 DSAB SHORT TO BATTERY
DTC B1385 PSAB SHORT TO BATTERY

DTC DESCRIPTION EC24381D

The Side Airbag circuit consists of the SRSCM and two Side Airbag (SAB).The SRSCM sets above DTC(s) if it detects short to battery line on the SAB circuit.

DTC DETECTING CONDITION E30DDECA

DTC	Condition	Probable cause
B1381 B1385	• Short to battery line between SAB and SRSCM • Side Airbag (SAB) Malfunction • SRSCM Malfunction	• Short to battery line circuit on wiring harness • Side Airbag (SAB) squib • SRSCM

SCHEMATIC DIAGRAM EAFD4DAB

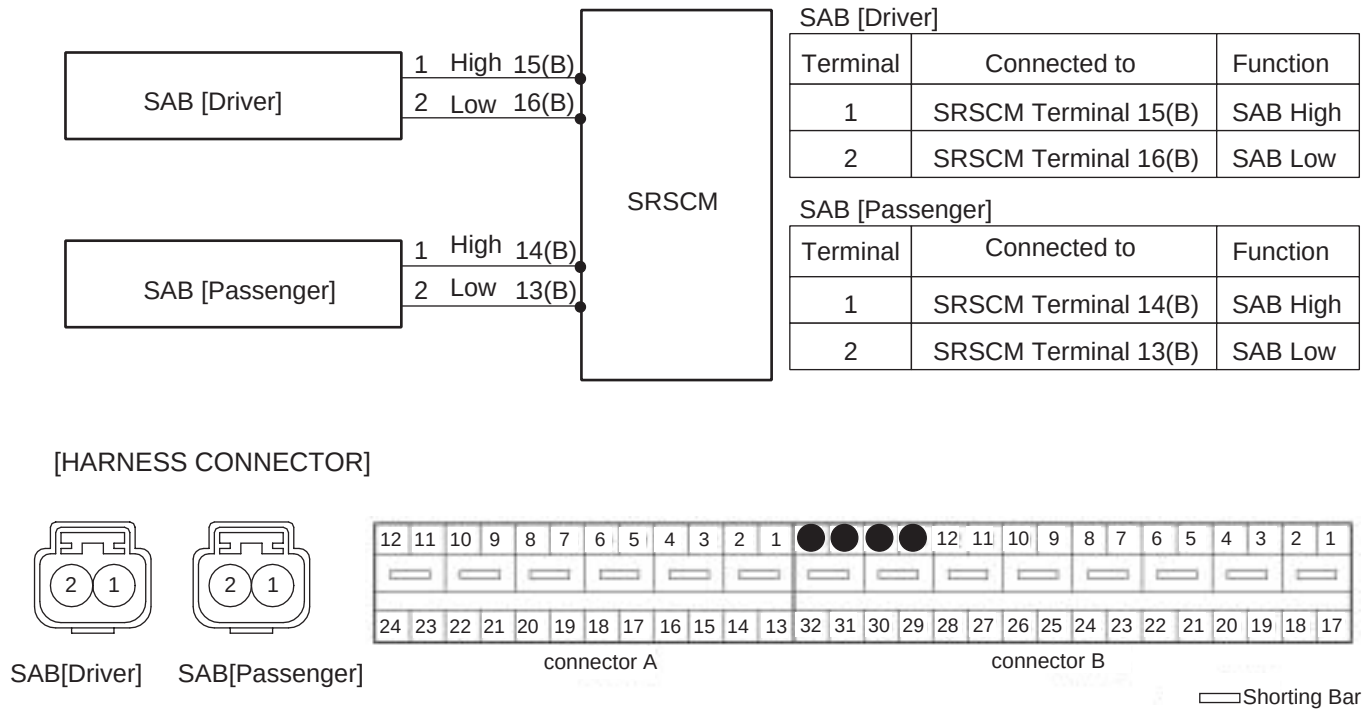

SAB [Driver]

Terminal	Connected to	Function
1	SRSCM Terminal 15(B)	SAB High
2	SRSCM Terminal 16(B)	SAB Low

SAB [Passenger]

Terminal	Connected to	Function
1	SRSCM Terminal 14(B)	SAB High
2	SRSCM Terminal 13(B)	SAB Low

ERRF500Y

TERMINAL & CONNECTOR INSPECTION EA7682C8

Refer to DTC B1101.

INSPECTION PROCEDURE E32D9A6F

1. PREPARATION
   Refer to DTC B1101.

2. CHECK SHORT TO BATTERY LINE

1) Connect the negative (-) terminal to the battery.

2) Turn the ignition switch to ON.

3) Measure voltage between the terminal 1 of SAB harness connector and chassis ground(-).

specification(voltage) : Approximately 0 V

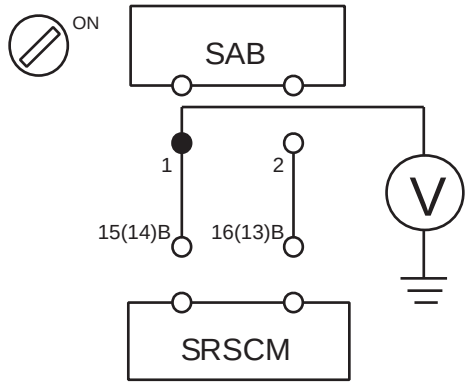

ERRF502D

Is the measured voltage within specification?

YES

▶ Check the SAB Module.

NO

▶ Repair the short to battery line circuit on wiring harness between the SAB and the SRSCM.

3. CHECK THE SAB MODULE

1) Replace the Side Airbag(SAB) with a new one.
● Refer to "Side Airbag(SAB)" section in this SERVICE MANUAL.

2) Install the DAB module and connect the DAB connector.

3) Connect the connectors of the PAB, SAB, CAB, BPT, BUPT, FIS and SIS.

4) Connect the SRSCM connector.

5) Connect the negative (-) terminal to the battery.

6) Connect a Hi-Scan(Pro) to the data link connector.

7) Turn the ignition switch to ON and check the vehicle again.
Does Hi-Scan (Pro) indicate any DTC related to Side Airbag(SAB)?

YES

▶ Go to next step.

NO

▶Replace SAB module.

4. CLEAR THE DTC AND CHECK THE VEHICLE AGAIN
Refer to DTC B1328.

DTC B1395 FIRING LOOP INTERCONNECTION FAULT

DTC DESCRIPTION ED3B6875

DTC code is detected when short is broken out between airbag module and the other module. And warning lamp operates after DTC is detected.

TERMINAL & CONNECTOR INSPECTION ECFB19B7

Refer to DTC B1101.

INSPECTION PROCEDURE EDDE5839

1. CHECK CIRCUIT

   1) Turn the ignition switch to LOCK.

   2) Disconnect the negative (-) terminal from the battery and wait for at least 3 minutes.

   3) Remove the DAB module and disconnect the DAB connector.

   4) Disconnect the connectors of the PAB,SAB,CAB,BPT,BUPT,FIS and SIS.

   5) Disconnect the SRSCM connector.

   6) Measure resistance between airbag module wiring harness and the other wiring harness.
      (ex. DAB vs PAB, DAB vs SAB, DAB vs CAB, DAB vs BPT, DAB vs BUPT etc.)

specification(resistance) : infinite

Is the measured resistance within specification?

YES

▶ Replace SRSCM, then go to " CLEAR THE DTC AND CHECK THE VEHICLE AGAIN ".

NO

▶ Repair or replace the wiring harness, then go to " CLEAR THE DTC AND CHECK THE VEHICLE AGAIN ".

2. CLEAR THE DTC AND CHECK THE VEHICLE AGAIN
   Refer to DTC B1328.

DTC B1400 DSIS DEFECT
DTC B1403 PSIS DEFECT
DTC B1409 DSIS COMMUNICATION ERROR
DTC B1410 PSIS COMMUNICATION ERROR

DTC DESCRIPTION E0E164EF

The detecting system for side crash consists of the SRSCM and two Side Impact Sensors (SIS).The SRSCM sets above DTC(s) if it detects that any SIS is defective or there is communication error between any front SIS and the SRSCM.

DTC DETECTING CONDITION EE35CAFA

DTC	Condition	Probable cause
B1400 B1403 B1409 B1410	• Open between SIS and SRSCM • Side Impact Sensor (SIS) Malfunction • SRSCM Malfunction	• Wiring Harness • Side Impact Sensor (SIS) squib • SRSCM

SCHEMATIC DIAGRAM EFE1CF4D

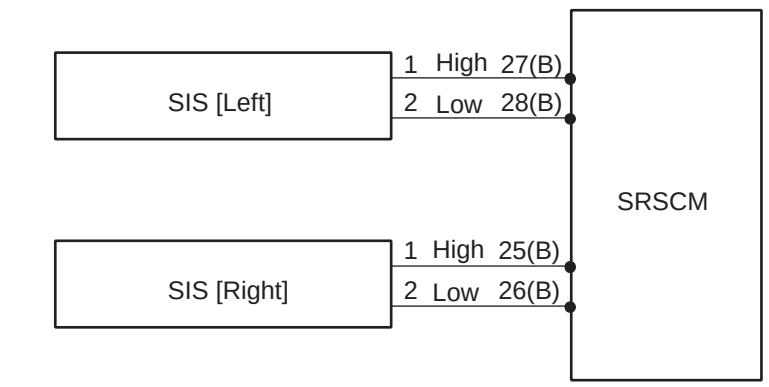

SIS [Left]

Terminal	Connected to	Function
1	SRSCM Terminal 27(B)	SIS High
2	SRSCM Terminal 28(B)	SIS Low

SIS [Right]

Terminal	Connected to	Function
1	SRSCM Terminal 25(B)	SIS High
2	SRSCM Terminal 26(B)	SIS Low

[HARNESS CONNECTOR]

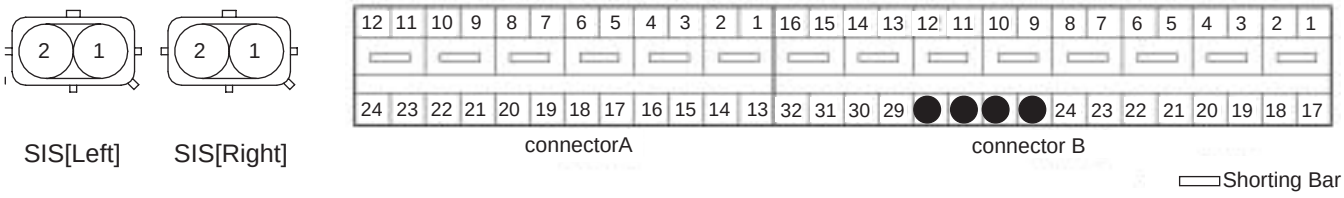

ERRF501A

TERMINAL & CONNECTOR INSPECTION E32FD9D9

Refer to DTC B1101.

INSPECTION PROCEDURE EFE8661E

1. PREPARATION
   Refer to DTC B1101.

2. CHECK SIS CIRCUIT

   1) Measure resistance between the terminal 1 of SIS harness connector and the terminal 27(25) of SRSCM harness connector(B).

   2) Measure resistance between the terminal 2 of SIS harness connector and the terminal 28(26) of SRSCM harness connector(B).

specification(resistance) : below 1 Ω

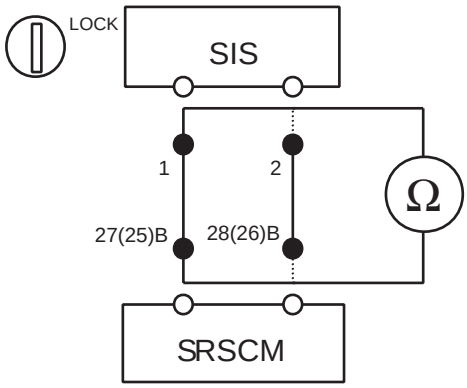

ERRF502E

Is the measured resistance within specification?

YES

▶Check Side Impact Sensor.

NO

▶ Repair or replace the wiring harness between the SIS and the SRSCM.

3. CHECK THE SIDE IMPACT SENSOR

   1) Replace the Side Impact Sensor(SIS) with a new one.
      ● Refer to "Side Impact Sensor(SIS)" section in this SERVICE MANUAL.

   2) Install the DAB module and connect the DAB connector.

   3) Connect the connectors of the PAB, SAB, CAB, BPT, BUPT, FIS and SIS.

   4) Connect the SRSCM connector.

   5) Connect the negative (-) terminal to the battery.

   6) Connect a Hi-Scan(Pro) to the data link connector.

   7) Turn the ignition switch to ON and check the vehicle again.
      Does Hi-Scan (Pro) indicate any DTC related to Side Impact Sensor(SIS)?

      YES

      ▶ Go to next step.

NO

▶ Replace SIS.

4. CLEAR THE DTC AND CHECK THE VEHICLE AGAIN
   Refer to DTC B1328.

DTC B1473 DCAB RESISTANCE TOO HIGH
DTC B1474 DCAB RESISTANCE TOO LOW
DTC B1477 PCAB RESISTANCE TOO HIGH
DTC B1478 PCAB RESISTANCE TOO LOW

DTC DESCRIPTION EC230EAE

The CAB squib circuit consists of the SRSCM and CAB.It causes the SRS to deploy when the SRS deployment conditions are satisfied.The above DTC is recorded when the CAB resistance too high or low is detected in the CAB squib circuit.

DTC DETECTING CONDITION EFC0D018

DTC	Condition	Probable cause
B1473 B1474 B1477 B1478	• Too high or low resistance between CAB high(+) and CAB low (-) • Curtain Airbag (CAB) Malfunction • SRSCM Malfunction	• Open or short circuit on wiring harness • Cirtain Airbag (CAB) squib • SRSCM

SCHEMATIC DIAGRAM EF228CB7

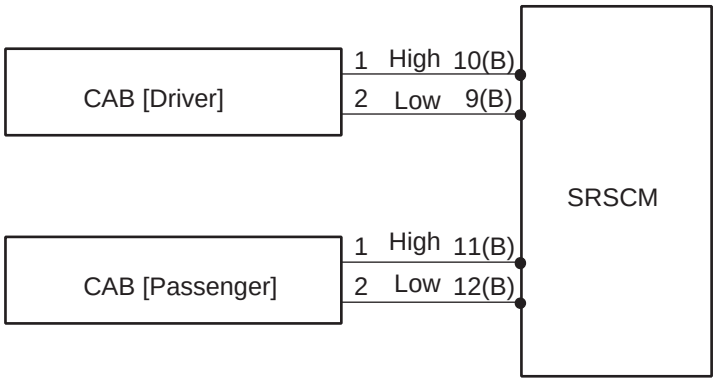

CAB [Driver]

Terminal	Connected to	Function
1	SRSCM Terminal 10(B)	SAB High
2	SRSCM Terminal 9(B)	SAB Low

CAB [Passenger]

Terminal	Connected to	Function
1	SRSCM Terminal 11(B)	SAB High
2	SRSCM Terminal 12(B)	SAB Low

[HARNESS CONNECTOR]

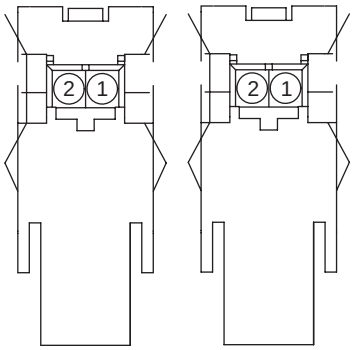

CAB[Driver] CAB[Passenger]

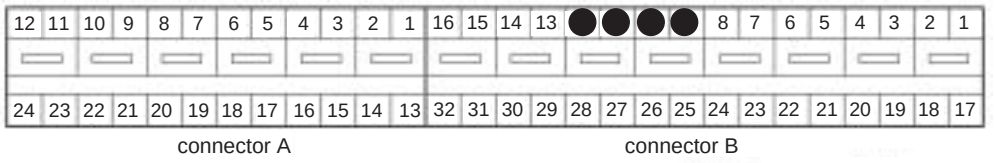

ERRF501B

SPECIFICATION E3BC6F20

CAB resistance : 1.9 ≤ R ≤ 2.7 Ω

TERMINAL & CONNECTOR INSPECTION EF3F408D

Refer to DTC B1101.

INSPECTION PROCEDURE E147C4B1

1. PREPARATION
   Refer to DTC B1101.

2. CHECK CAB RESISTANCE

   ⚠ ***CAUTION***

   Never attempt to measure the circuit resistance of the airbag module(squib) even if you are using the specified tester.

   1) Connect the Dummy and the Dummy Adapter on CAB harness connector.
      ● Refer to "SPECIAL SERVICE TOOL" section in this SERVICE MANUAL for the SST No. of Dummy and Dummy Adapter.

   2) Measure resistance between the terminal 10(11) and 9(12) of SRSCM harness connector(B).

CAB resistance : 1.5 ≤ R ≤ 5.7 Ω

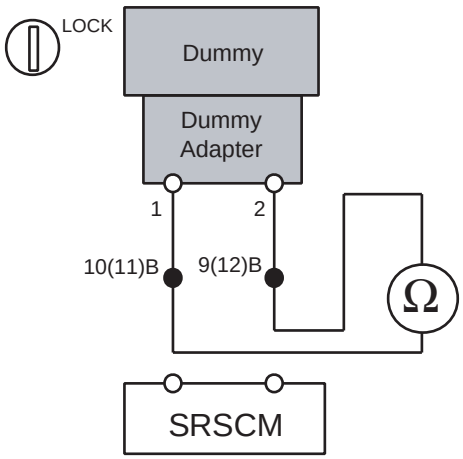

ERRF501C

Is the measured resistance within specification?

YES

▶Replace the Curtain Airbag(CAB) module.

NO

▶Check open circuit.

3. CHECK OPEN CIRCUIT

1) Measure resistance between the terminal 1 of CAB harness connector and the terminal 10(11) of SRSCM harness connector(B).

2) Measure resistance between the terminal 2 of CAB harness connector and the terminal 9(12) of SRSCM harness connector(B).

specification(resistance) : below 1 Ω

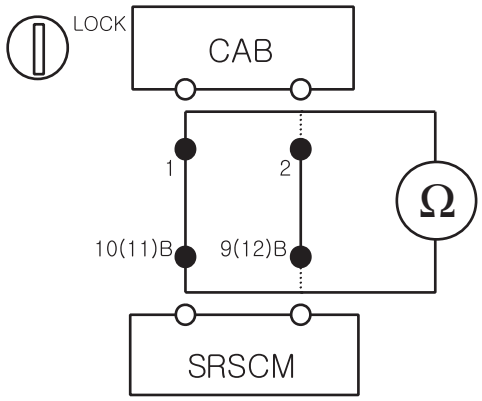

KRRE501Z

Is the measured resistance within specification?

YES

▶Check short circuit.

NO

▶Repair or replace the wiring harness between the CAB and the SRSCM.

4. CHECK SHORT CIRCUIT

1) Measure resistance between the terminal 1 and 2 of CAB harness connector.

specification(resistance) : infinite

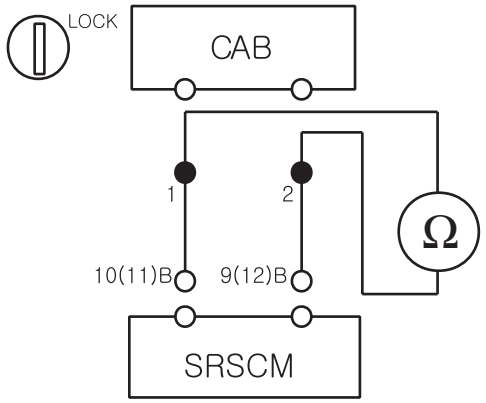

KRRE502A

Is the measured resistance within specification?

YES

▶ Go to next step.

NO

▶ Repair or replace the wiring harness between the CAB and the SRSCM.

5. CLEAR THE DTC AND CHECK THE VEHICLE AGAIN
   Refer to DTC B1328.

DTC B1475 DCAB SHORT TO GROUND
DTC B1479 PCAB SHORT TO GROUND

DTC DESCRIPTION E7BD197C

The CAB squib circuit consists of the SRSCM and CAB.It causes the SRS to deploy when the SRS deployment conditions are satisfied.The above DTC is recorded when short to ground is detected in the CAB squib circuit.

DTC DETECTING CONDITION E03A7F6E

DTC	Condition	Probable cause
B1475 B1479	• Short to ground between CAB and SRSCM • Curtain Airbag (CAB) Malfunction • SRSCM Malfunction	• Short to ground circuit on wiring harness • Curtain Airbag (CAB) squib • SRSCM

SCHEMATIC DIAGRAM E0F8C6A3

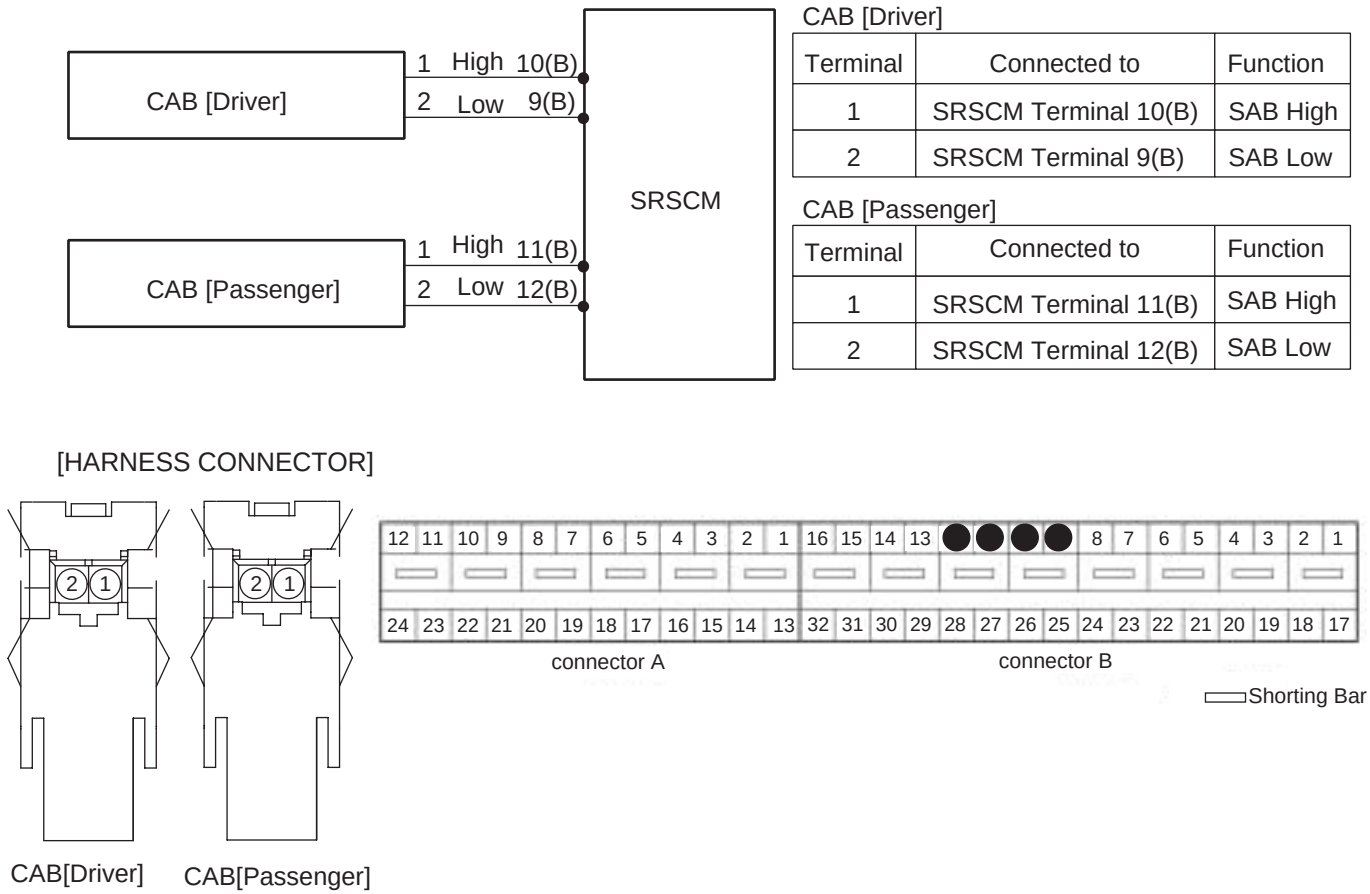

ERRF501B

TERMINAL & CONNECTOR INSPECTION E2BD5678

Refer to DTC B1101.

INSPECTION PROCEDURE E180D45A

1. PREPARATION
   Refer to DTC B1101.

2. CHECK SHORT TO GROUND

   1) Measure resistance between the terminal 1 of CAB harness connector and chassis ground.

specification(resistance) : infinite

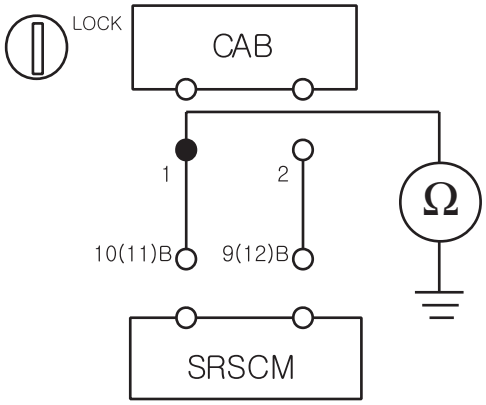

KRRE502B

Is the measured resistance within specification?

YES

▶ Check the CAB Module..

NO

▶ Repair or replace the wiring harness between the CAB and the SRSCM.

3. CHECK THE CAB MODULE

   1) Replace the Curtain Airbag(CAB) with a new one.
      ● Refer to "Curtain Airbag(CAB)" section in this SERVICE MANUAL.

   2) Install the DAB module and connect the DAB connector.

   3) Connect the connectors of the PAB, SAB, CAB, BPT, BUPT, FIS and SIS.

   4) Connect the SRSCM connector.

   5) Connect the negative (-) terminal to the battery.

   6) Connect a Hi-Scan(Pro) to the data link connector.

   7) Turn the ignition switch to ON and check the vehicle again.
      Does Hi-Scan (Pro) indicate any DTC related to Curtain Airbag(CAB)?

YES

▶ Go to next step.

NO

▶ Replace CAB module.

4. CLEAR THE DTC AND CHECK THE VEHICLE AGAIN
   Refer to DTC B1328.

DTC B1476 DCAB SHORT TO BATTERY
DTC B1480 PCAB SHORT TO BATTERY

DTC DESCRIPTION E3D7B480

The CAB squib circuit consists of the SRSCM and CAB.It causes the SRS to deploy when the SRS deployment conditions are satisfied.The above DTC is recorded when short to battery is detected in the CAB squib circuit.

DTC DETECTING CONDITION EB50D557

DTC	Condition	Probable cause
B1476 B1480	• Short to battery between CAB and SRSCM • Curtain Airbag (CAB) Malfunction • SRSCM Malfunction	• Short to battery line circuit on wiring harness • Curtain Airbag (CAB) squib • SRSCM

SCHEMATIC DIAGRAM E84DF9F7

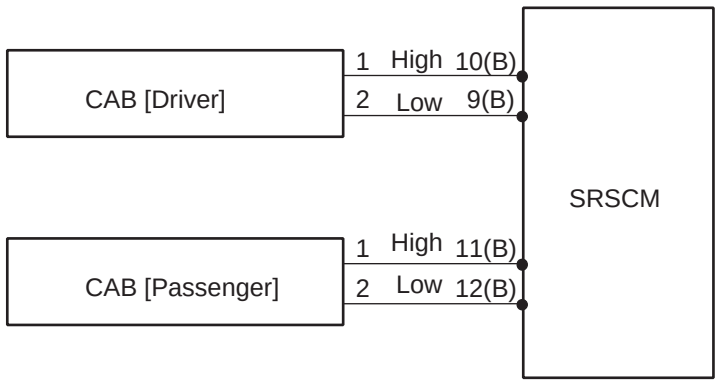

CAB [Driver]

Terminal	Connected to	Function
1	SRSCM Terminal 10(B)	SAB High
2	SRSCM Terminal 9(B)	SAB Low

CAB [Passenger]

Terminal	Connected to	Function
1	SRSCM Terminal 11(B)	SAB High
2	SRSCM Terminal 12(B)	SAB Low

[HARNESS CONNECTOR]

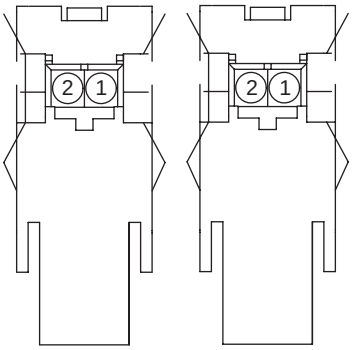

CAB[Driver] CAB[Passenger]

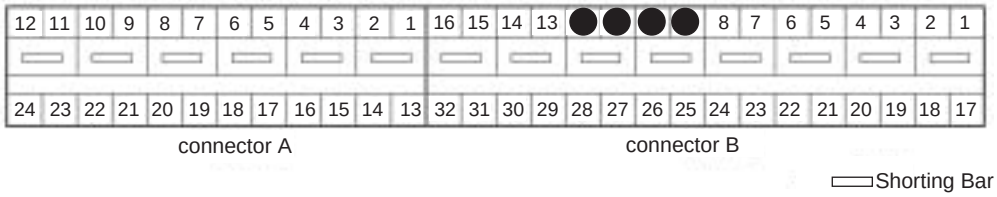

ERRF501B

TERMINAL & CONNECTOR INSPECTION E2924EA9

Refer to DTC B1101.

INSPECTION PROCEDURE EBC4E47F

1. PREPARATION
   Refer to DTC B1101.

2. CHECK SHORT TO BATTERY LINE

   1) Connect the negative (-) terminal to the battery.

   2) Turn the ignition switch to ON.

   3) Measure voltage between the terminal 1 of CAB harness connector and chassis ground(-).

specification(voltage) : Approximately 0 V

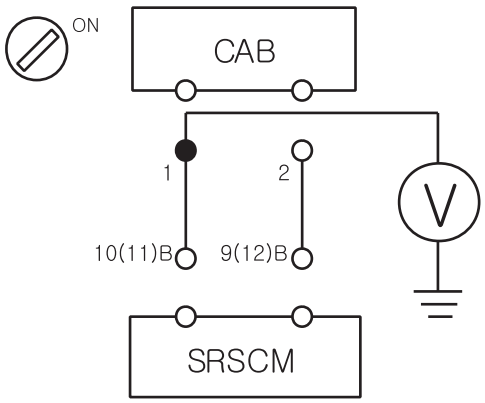

KRRE502C

Is the measured voltage within specification?

YES

▶ Check the CAB Module.

NO

▶ Repair the short to battery line circuit on wiring harness between the CAB and the SRSCM.

3. CHECK THE CAB MODULE

   1) Replace the Curtain Airbag(CAB) with a new one.
      ● Refer to "Curtain Airbag(CAB)" section in this SERVICE MANUAL.

   2) Install the DAB module and connect the DAB connector.

   3) Connect the connectors of the PAB, SAB, CAB, BPT, BUPT, FIS and SIS.

   4) Connect the SRSCM connector.

   5) Connect the negative (-) terminal to the battery.

   6) Connect a Hi-Scan(Pro) to the data link connector.

   7) Turn the ignition switch to ON and check the vehicle again.
      Does Hi-Scan (Pro) indicate any DTC related to Curtain Airbag(CAB)?

YES

▶ Go to next step.

NO

▶ Replace CAB module.

4. CLEAR THE DTC AND CHECK THE VEHICLE AGAIN
   Refer to DTC B1328.

DTC B1527 PASSENGER AIRBAG ON-OFF SWITCH OPEN OR SHORT TO BATTERY

DTC DESCRIPTION E1BAFE8B

The release system for the airbag consists of the SRSCM, an interface unit and the Passenger Airbag Disable(PAD) switch. The above DTC is recored when PAD short to ground is detected in the PAD circuit.

DTC DETECTING CONDITION E2085E94

DTC	Condition	Probable cause
B1527	• Short to battery line between PAD switch and SRSCM malfunction • squib Malfunction • SRSCM Malfunction • PAD switch malfunction	• PAD switch • Wiring harness • SRSCM

SCHEMATIC DIAGRAM EDC70BEB

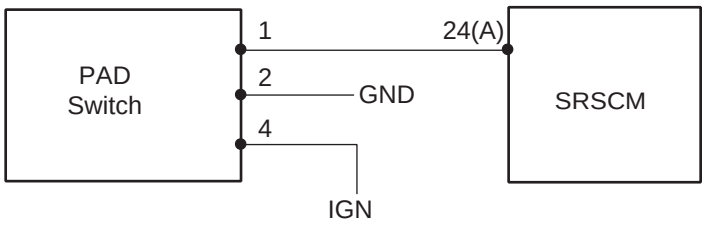

Terminal	Connected to	Function
1	SRSCM Terminal 24(A)	PAD Switch
4	IGN	Battery Voltage

[HARNESS CONNECTOR]

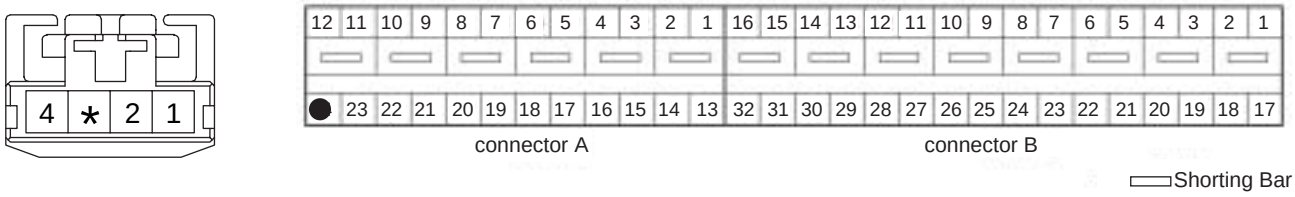

ERRF502F

SPECIFICATION E6682E1A

[PAD SWITCH DIAGNOSTIC CURRENT LIMITS]

Open/Short to Battery	Tolerance	PAB Enabled	Tolerance	Defect	Tolerance	PAB Disabled	Tolerance	Short/Short to ground
< 2.71 mA	2.71 ~ 2.96 mA	2.96 ~ 5.01 mA	5.01 ~ 5.46 mA	5.46 ~ 6.68 mA	6.68 ~ 7.28 mA	7.28 ~ 12.73 mA	12.73 ~ 13.87 mA	> 13.87 mA

TERMINAL & CONNECTOR INSPECTION E85ED489

Refer to DTC B1101.

INSPECTION PROCEDURE E1075E36

1. PREPARATION

   1) Turn the ignition switch to LOCK.

   2) Disconnect the negative (-) terminal from the battery and wait for at least 3 minutes.

   3) Remove the DAB module and disconnect the DAB connector.

   4) Disconnect the connectors of the PAB,SAB,CAB,BPT,BUPT,FIS and SIS.

   5) Disconnect the connector of the PAD switch.

   6) Disconnect the SRSCM connector.

2. CHECK OPEN CIRCUIT
   Measure resistance between the terminal 24 of the SRSCM harness connector(A) and 1 of PAD switch connector.

Specification (resistance) : below 1 Ω

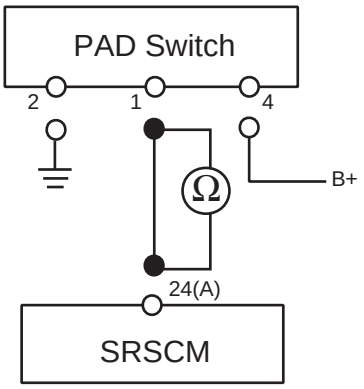

ERRF502G

Is the measured resistance within specification?

YES

▶ Check short to battery line.

NO

▶ Replace the harness between the SRSCM and the PAD switch.

3. CHECK SHORT TO BATTERY LINE

   1) Connect the negative (-) terminal to the battery.

   2) Turn the ignition switch to ON.

   3) Turn the ignition switch to LOCK, and wait for 30 seconds.

   4) Measure voltage between the terminal 1 of PAD switch harness connector and chassis ground(-).

specification(voltage) : Approximately 0 V

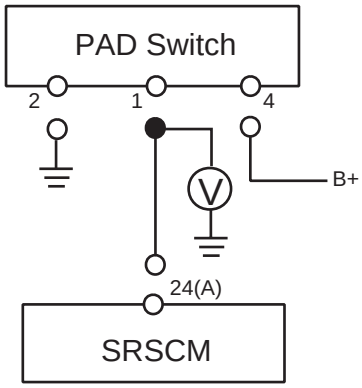

ERRF502H

Is the measured voltage within specification?

YES

▶ Go to next step.

NO

▶ Repair or replace the wiring harness between the PAD switch and the SRSCM.

4. CHECK THE PAD SWITCH

1) Connect the SRSCM connector.

2) Connect the PAD switch.

3) Connect the negative (-) terminal to the battery.

4) IG ON.

5) Measure current between the terminal 24 of the SRSCM harness connector(A) and 1 of PAD switch connector.

---

specification(current) :
PAD switch(Enabled position) : 2.96 ~ 5.01 mA (PAB enable)
PAD switch(Disabled position) : 7.28 ~ 12.73 mA (PAB disable)

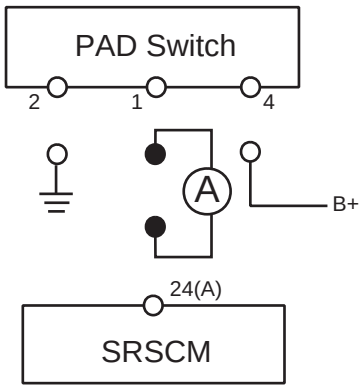

ERRF502I

Is the measured current within specification?

YES

▶ Go to next step.

NO

▶Replace the PAD switch.

5. CLEAR THE DTC AND CHECK THE VEHICLE AGAIN
   Refer to DTC B1328.

DTC B1528 PASSENGER AIRBAG ON-OFF SWITCH OPEN OR SHORT TO GROUND

DTC DESCRIPTION EB4B20EB

The release system for the airbag consists of the SRSCM, an interface unit and the Passenger Airbag Disable(PAD) switch. The above DTC is recored when PAD short to ground is detected in the PAD circuit.

DTC DETECTING CONDITION EDF9AEE5

DTC	Condition	Probable cause
B1528	• PAD switch malfunction • squib Malfunction • SRSCM Malfunction	• PAD switch • Wiring harness • SRSCM

SCHEMATIC DIAGRAM EE4528B9

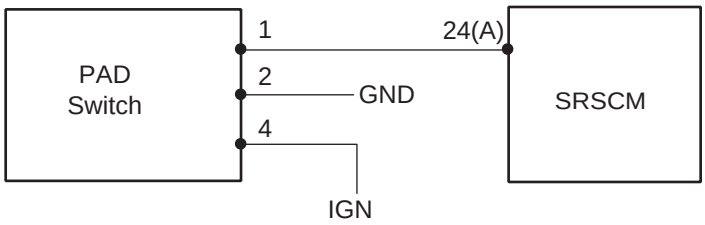

Terminal	Connected to	Function
1	SRSCM Terminal 24(A)	PAD Switch
4	IGN	Battery Voltage

[HARNESS CONNECTOR]

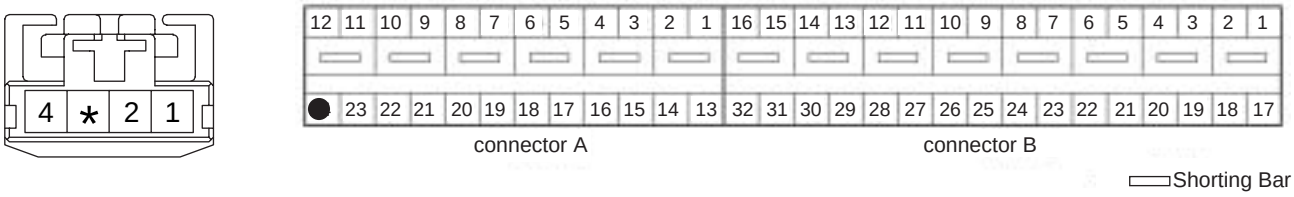

ERRF502F

SPECIFICATION EEF2AAEC

[PAD SWITCH DIAGNOSTIC CURRENT LIMITS]

Open/Short to Battery	Tolerance	PAB Enabled	Tolerance	Defect	Tolerance	PAB Disabled	Tolerance	Short/Short to ground
< 2.71 mA	2.71 ~ 2.96 mA	2.96 ~ 5.01 mA	5.01 ~ 5.46 mA	5.46 ~ 6.68 mA	6.68 ~ 7.28 mA	7.28 ~ 12.73 mA	12.73 ~ 13.87 mA	> 13.87 mA

TERMINAL & CONNECTOR INSPECTION EF8ED7F5

Refer to DTC B1101.

INSPECTION PROCEDURE E7A20A4B

1. PREPARATION
   Refer to DTC B1527.

2. CHECK SHORT TO GROUND
   Measure resistance between chassis ground and 1 of PAD switch connector.

Specification (resistance) : infinite

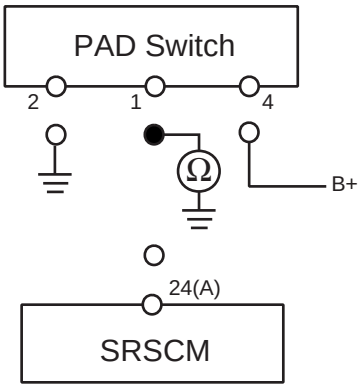

ERRF502J

Is the measured resistance within specification?

YES

▶Check short .

NO

▶Replace the harness between the SRSCM and the PAD switch.

3. CHECK SHORT

   1) Measure resistance between 1 and 2 of PAD switch connector.

   2) Measure resistance between 1 and 4 of PAD switch connector.

Specification (resistance) : infinite

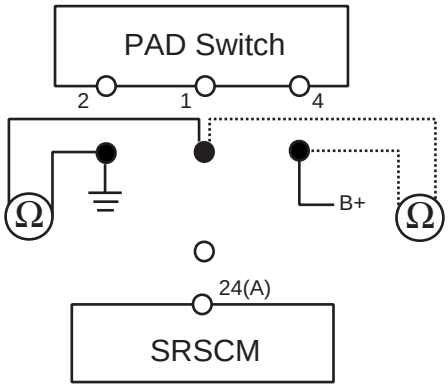

ERRF502K

Is the measured resistance within specification?

YES

▶ Go to next step.

NO

▶ Repair or replace the wiring harness between the PAD switch and the SRSCM.

4. CHECK THE PAD SWITCH

1) Connect the SRSCM connector.

2) Connect the PAD switch.

3) Connect the negative (-) terminal to the battery.

4) IG ON.

5) Measure current between the terminal 24 of the SRSCM harness connector(A) and 1 of PAD switch connector.

specification(current) :
PAD switch(Enabled position) : 2.96 ~ 5.01 mA (PAB enable)
PAD switch(Disabled position) : 7.28 ~ 12.73 mA (PAB disable)

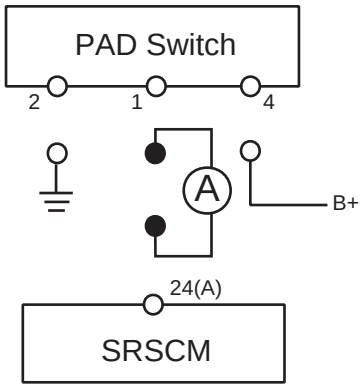

ERRF502I

Is the measured current within specification?

YES

▶ Go to next step.

NO

▶ Replace the PAD switch.

5. CLEAR THE DTC AND CHECK THE VEHICLE AGAIN
   Refer to DTC B1328.

DTC B1529 PASSENGER AIRBAG ON-OFF SWITCH DEFECT
DTC B1530 PASSENGER AIRBAG ON-OFF SWITCH INSTABILITY

DTC DESCRIPTION E4BAACC9

The release system for the airbag consists of the SRSCM, an interface unit and the Passenger Airbag Disable(PAD) switch. The above DTC is recored when PAD short to ground is detected in the PAD circuit.

DTC DETECTING CONDITION EB7BD4EA

DTC	Condition	Probable cause
B1529 B1530	• PAD switch malfunction • squib Malfunction • SRSCM Malfunction	• PAD switch • Wiring harness • SRSCM

SCHEMATIC DIAGRAM E2AC806A

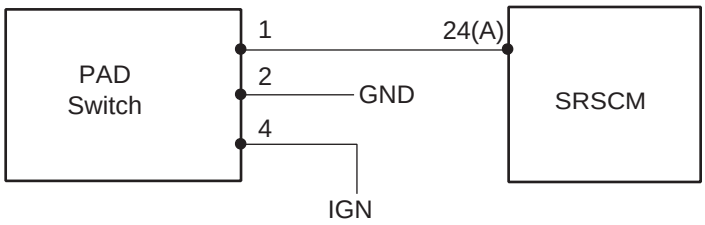

Terminal	Connected to	Function
1	SRSCM Terminal 24(A)	PAD Switch
4	IGN	Battery Voltage

[HARNESS CONNECTOR]

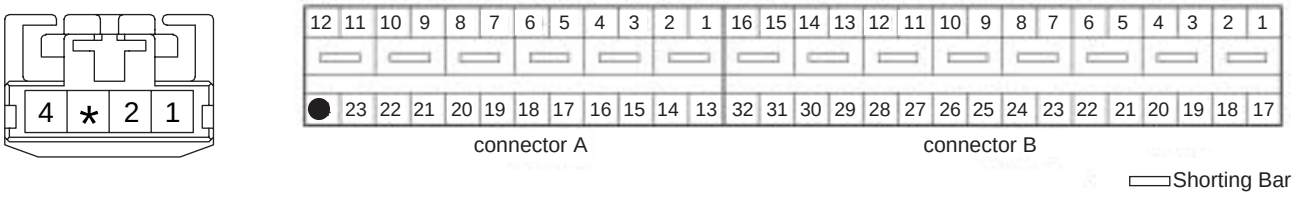

ERRF502F

SPECIFICATION E31AE4FB

[PAD SWITCH DIAGNOSTIC CURRENT LIMITS]

Open/Short to Battery	Tolerance	PAB Enabled	Tolerance	Defect	Tolerance	PAB Disabled	Tolerance	Short/Short to ground
< 2.71 mA	2.71 ~ 2.96 mA	2.96 ~ 5.01 mA	5.01 ~ 5.46 mA	5.46 ~ 6.68 mA	6.68 ~ 7.28 mA	7.28 ~ 12.73 mA	12.73 ~ 13.87 mA	> 13.87 mA

TERMINAL & CONNECTOR INSPECTION E10BC487

Refer to DTC B1101.

INSPECTION PROCEDURE E41DDC7B

1. PREPARATION
   Refer to DTC B1101.

2. CHECK POWER SUPPLY CIRCUIT INSPECTION

   1) Connect the negative(-) terminal.

   2) IG ON.

   3) Measure voltage between chassis ground and 4 of PAD switch connector.

Specification (voltage) : 9 ~ 16 V

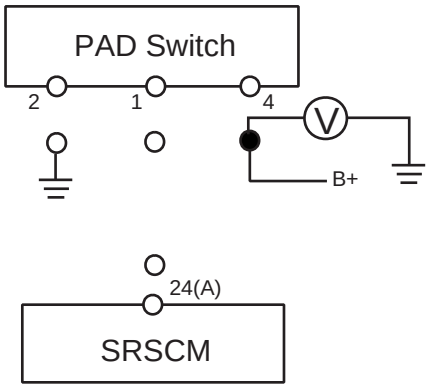

ERRF502L

Is the measured voltage within specification?

YES

▶ Check ground circuit inspection.

NO

▶Replace the harness between the battery line and the PAD switch.

3. CHECK GROUND CIRCUIT INSPECTION

   1) IG OFF.

   2) Disconnect the negative(-) terminal.

   3) Measure resistance between chassis ground and 2 of PAD switch connector.

Specification (resistance) : 0 Ω

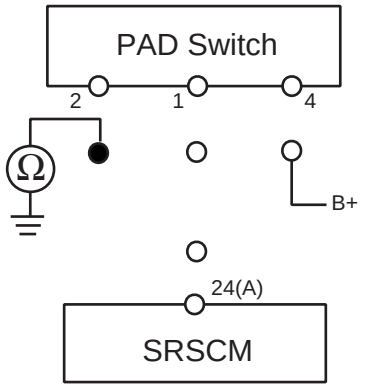

ERRF502M

Is the measured resistance within specification?

YES

▶ Go to next step.

NO

▶ Repair or replace the wiring harness between the PAD switch and the chassis ground.

4. CHECK THE PAD SWITCH

1) Connect the SRSCM connector.

2) Connect the PAD switch.

3) Connect the negative (-) terminal to the battery.

4) IG ON.

5) Measure current between the terminal 24 of the SRSCM harness connector(A) and 1 of PAD switch connector.

specification(current) :
PAD switch(Enabled position) : 2.96 ~ 5.01 mA (PAB enable)
PAD switch(Disabled position) : 7.28 ~ 12.73 mA (PAB disable)

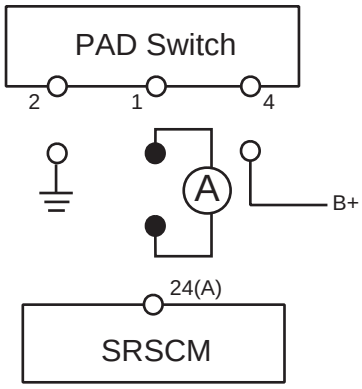

ERRF502I

Is the measured current within specification?

YES

▶ Go to next step.

NO

▶ Replace the PAD switch.

5. CLEAR THE DTC AND CHECK THE VEHICLE AGAIN
   Refer to DTC B1328.

DTC B1620 AIRBAG UNIT INTERNAL FAULT
DTC B1650 CRASH RECORDED IN FRONT AIRBAG
DTC B1651 CRASH RECORDED DRIVER SIDE AIRBAG
DTC B1652 CRASH RECORDED PASSENGER SIDE AIRBAG
DTC B1655 CRASH RECORDED - PASSENGER SIDE WITH PAB INHIBITED

DTC DESCRIPTION EBF51CCD

The SRSCM shall also cyclically monitor the following :

1. Functional readliness of the firing circuit activation transistors.
2. Adequacy of deployment energy reserves.
3. Safing sensor integtity : detection of faulty closure.
4. Plausibility of accelerometer signal.
5. Operation of SRSCM components.

INSPECTION PROCEDURE EBF8C633

The SRSCM must be replaced once the fault codes mentioned above are confirmed.

DTC B1659 REAR IMPACT DETECTED

DTC DESCRIPTION E3478CEA

DTC is detected when a rear Crash is recorded in the SRS Control module .Although it is detected , any airbag doesn't inflate. And DTC code is only eliminated by using HI-scan.

TERMINAL & CONNECTOR INSPECTION EEFCC365

Refer to DTC B1101.

INSPECTION PROCEDURE E423E9AE

1. PREPARATION

   1) Turn the ignition switch to LOCK, remove battery(-) cable. wait for 1 min.

   2) Connect battery(-) cable ,connect Hi-scan. Turn on the ignition , wait for 30 sec.

   3) IGN ON, Engine off. select "Diagnostic Trouble Codes(DTCs)" mode.

   4) Monitor diagnostic trouble code and present of trouble code.

   5) Using a scan tool, clear the DTCs.
      Is a DTC monitored?

      YES

      ▶ If a DTC can,t be eliminated, replace SRSCM. Then go to next step.

2. CLEAR THE DTC AND CHECK THE VEHICLE AGAIN
   Refer to DTC B1328.

DTC B1701 DRIVER BUCKLE PRETENSIONER RESISTANCE TOO HIGH
DTC B1702 DRIVER BUCKLE PRETENSIONER RESISTANCE TOO LOW
DTC B1706 PASSENGER BUCKLE PRETENSIONER RESISTANCE TOO HIGH
DTC B1707 PASSENGER BUCKLE PRETENSIONER RESISTANCE TOO LOW

DTC DESCRIPTION ED0CFC6E

The Buckle Pretensioner circuit consists of the SRSCM and two Buckle Pretensioner (BUPT). The SRSCM sets above DTC(s) if it detects that the resistance of BUPT squib is too high or low.

DTC DETECTING CONDITION E9C428BB

DTC	Condition	Probable cause
B1701 B1702 B1706 B1707	• Too high or low resistance between BUPT high(+) and BUPT low (-) • Seat Buckle Pretensioner (BUPT) Malfunction • SRSCM Malfunction	• Open or short circuit on wiring harness • Seat Buckle Pretensioner (BUPT) squib • SRSCM

SCHEMATIC DIAGRAM E26DAB47

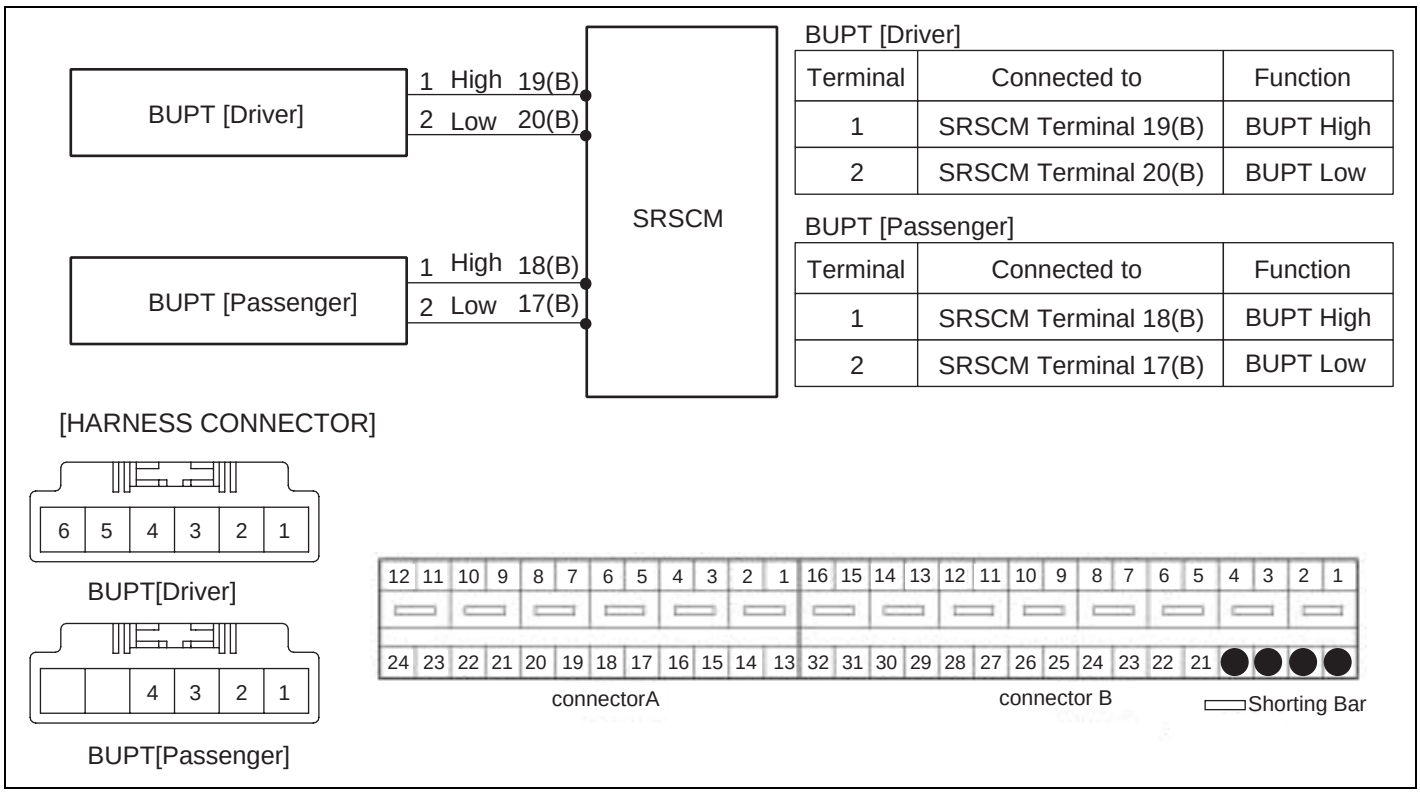

BUPT [Driver]

Terminal	Connected to	Function
1	SRSCM Terminal 19(B)	BUPT High
2	SRSCM Terminal 20(B)	BUPT Low

BUPT [Passenger]

Terminal	Connected to	Function
1	SRSCM Terminal 18(B)	BUPT High
2	SRSCM Terminal 17(B)	BUPT Low

ERRF501E

SPECIFICATION EF60FAAB

BUPT resistance : $1.9 \leq R \leq 2.7\ \Omega$

TERMINAL & CONNECTOR INSPECTION EA3C1743

Refer to DTC B1101.

INSPECTION PROCEDURE E7DAE4E1

1. PREPARATION
   Refer to DTC B1101.

2. CHECK BUPT RESISTANCE

   ⚠ ***CAUTION***

   Never attempt to measure the circuit resistance of the airbag module(squib) even if you are using the specified tester.

   1) Connect the Dummy and the Dummy Adapter on BUPT harness connector.
      ● Refer to "SPECIAL SERVICE TOOL" section in this SERVICE MANUAL for the SST No. of Dummy and Dummy Adapter.

   2) Measure resistance between the terminal 19(18) and 20(17) of SRSCM harness connector(B).

CAB resistance : 1.9 ≤ R ≤ 2.7 Ω

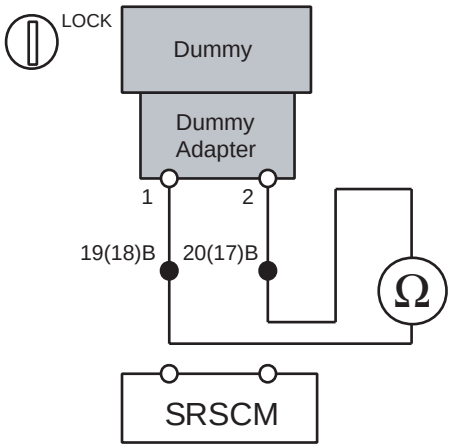

ERRF501F

Is the measured resistance within specification?

YES

▶ Replace the Buckle Pretensioner(BUPT) module.

NO

▶ Check open circuit.

3. CHECK OPEN CIRCUIT

1) Measure resistance between the terminal 1 of BUPT harness connector and the terminal 19(18) of SRSCM harness connector(B).

2) Measure resistance between the terminal 2 of BUPT harness connector and the terminal 20(17) of SRSCM harness connector(B).

specification(resistance) : below 1 Ω

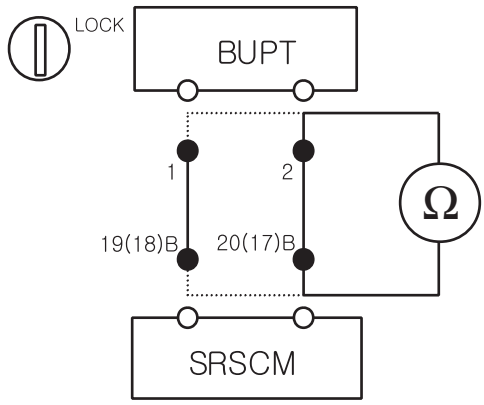

KRRE502F

Is the measured resistance within specification?

YES

▶ Check short circuit.

NO

▶ Repair or replace the wiring harness between the BUPT and the SRSCM.

4. CHECK SHORT CIRCUIT

1) Measure resistance between the terminal 1 and 2 of BUPT harness connector.

specification(resistance) : infinite

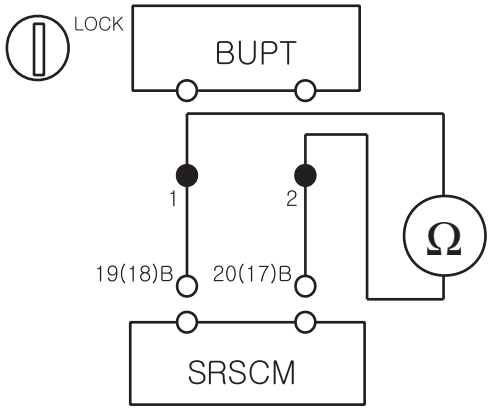

KRRE502G

Is the measured resistance within specification?

YES

▶ Go to next step.

NO

▶ Repair or replace the wiring harness between the BUPT and the SRSCM.

5. CLEAR THE DTC AND CHECK THE VEHICLE AGAIN
   Refer to DTC B1328.

DTC B1703 DRIVER BUCKLE PRETENSIONER SHORT TO GROUND
DTC B1708 PASSENGER BUCKLE PRETENSIONER SHORT TO GROUND

DTC DESCRIPTION E03A7FDD

The Buckle Pretensioner circuit consists of the SRSCM and two Buckle Pretensioner (BUPT). The SRSCM sets above DTC(s) if it detects short to ground on the BUPT circuit.

DTC DETECTING CONDITION EF8CF3F0

DTC	Condition	Probable cause
B1703 B1708	• Short to ground between BUPT and SRSCM • Seat Buckle Pretensioner (BUPT) Malfunction • SRSCM Malfunction	• Short to ground circuit on wiring harness • Seat Buckle Pretensioner (BUPT) squib • SRSCM

SCHEMATIC DIAGRAM E43A0022

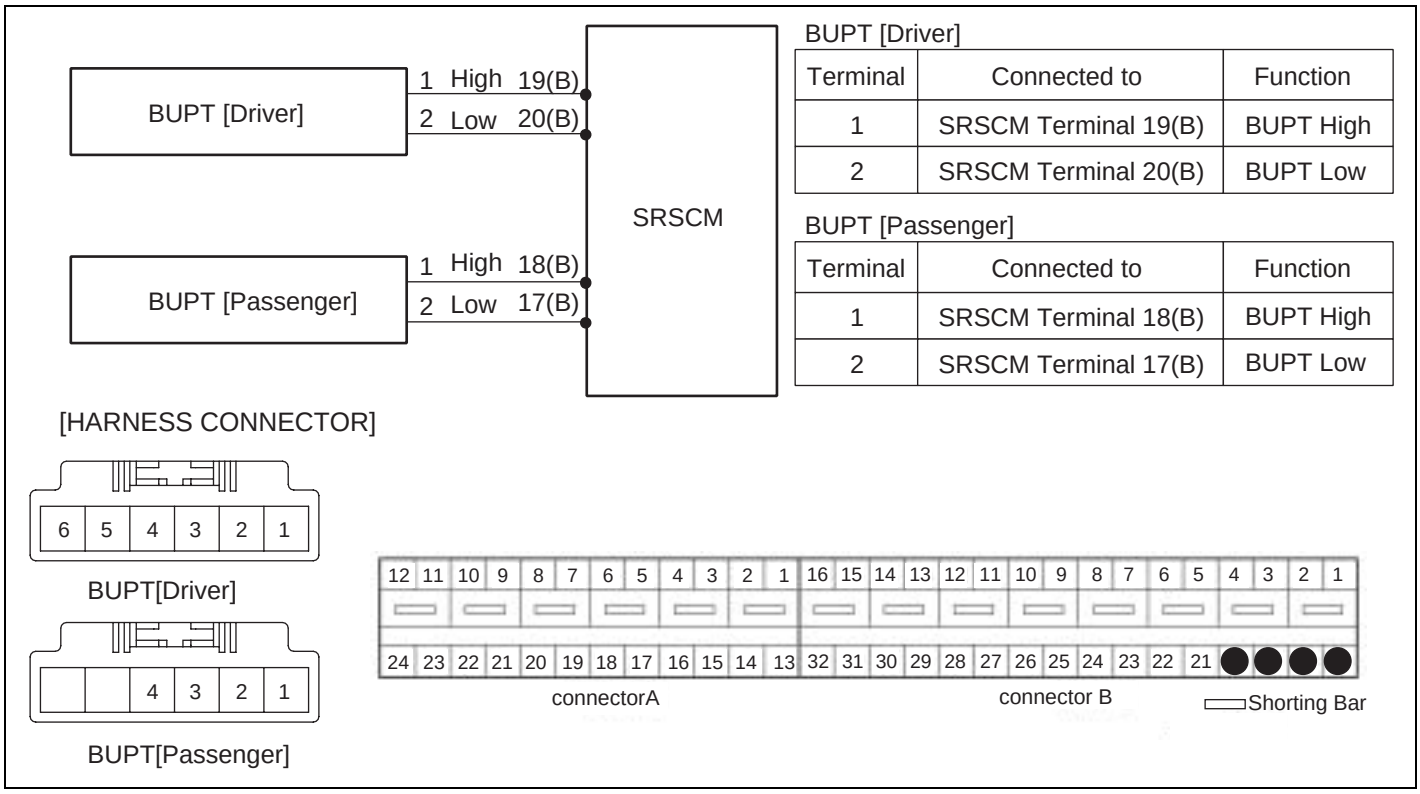

BUPT [Driver]

Terminal	Connected to	Function
1	SRSCM Terminal 19(B)	BUPT High
2	SRSCM Terminal 20(B)	BUPT Low

BUPT [Passenger]

Terminal	Connected to	Function
1	SRSCM Terminal 18(B)	BUPT High
2	SRSCM Terminal 17(B)	BUPT Low

ERRF501E

TERMINAL & CONNECTOR INSPECTION E3BC60BA

Refer to DTC B1101.

INSPECTION PROCEDURE E5712B8F

1. PREPARATION
   Refer to DTC B1101.

2. CHECK SHORT TO GROUND

1) Measure resistance between the terminal 1 of BUPT harness connector and chassis ground.

specification(resistance) : infinite

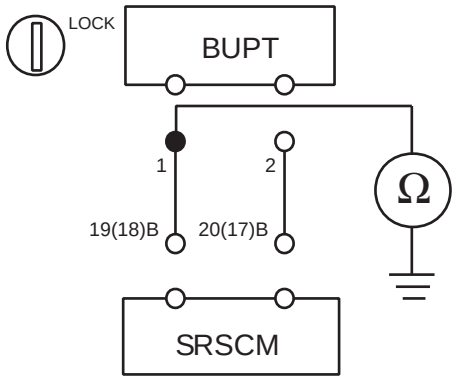

ERRF502N

Is the measured resistance within specification?

YES

▶ Check the BUPT Module.

NO

▶ Repair or replace the wiring harness between the BUPT and the SRSCM.

3. CHECK THE BUPT MODULE

1) Replace the Buckle Pretensioner(BUPT) with a new one.
● Refer to "Buckle Pretensioner(BUPT)" section in this SERVICE MANUAL.

2) Install the DAB module and connect the DAB connector.

3) Connect the connectors of the PAB, SAB, CAB, BPT, BUPT, FIS and SIS.

4) Connect the SRSCM connector.

5) Connect the negative (-) terminal to the battery.

6) Connect a Hi-Scan(Pro) to the data link connector.

7) Turn the ignition switch to ON and check the vehicle again.
Does Hi-Scan (Pro) indicate any DTC related to Buckle Pretensioner(BUPT)?

YES

▶ Go to next step.

NO

▶ Replace BUPT module.

4. CLEAR THE DTC AND CHECK THE VEHICLE AGAIN
Refer to DTC B1328.

DTC B1704 DRIVER BUCKLE PRETENSIONER SHORT TO BATTERY
DTC B1709 PASSENGER BUCKLE PRETENSIONER SHORT TO BATTERY

DTC DESCRIPTION EFAE95BA

The Buckle Pretensioner circuit consists of the SRSCM and two Buckle Pretensioner (BUPT). The SRSCM sets above DTC(s) if it detects short to battery on the BUPT circuit.

DTC DETECTING CONDITION E382548C

DTC	Condition	Probable cause
B1704 B1709	• Short to battery between BUPT and SRSCM • Seat Buckle Pretensioner (BUPT) Malfunction • SRSCM Malfunction	• Short to battery line circuit on wiring harness • Buckle Pretensioner(BUPT) squib • SRSCM

SCHEMATIC DIAGRAM ECA48AA8

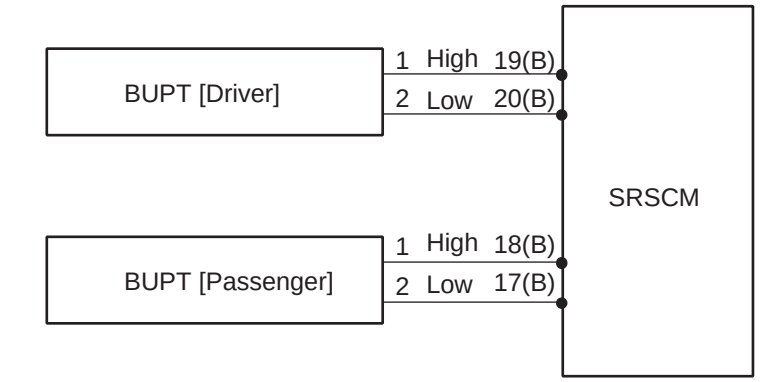

BUPT [Driver]

Terminal	Connected to	Function
1	SRSCM Terminal 19(B)	BUPT High
2	SRSCM Terminal 20(B)	BUPT Low

BUPT [Passenger]

Terminal	Connected to	Function
1	SRSCM Terminal 18(B)	BUPT High
2	SRSCM Terminal 17(B)	BUPT Low

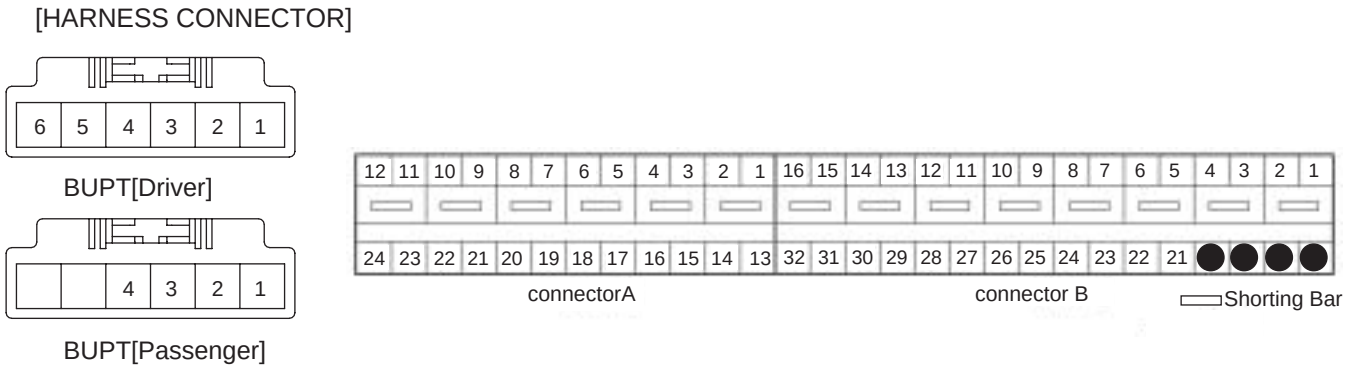

ERRF501E

TERMINAL & CONNECTOR INSPECTION EF5271BF

Refer to DTC B1101.

INSPECTION PROCEDURE EE1CE7EC

1. PREPARATION
   Refer to DTC B1101.

2. CHECK SHORT TO BATTERY LINE

   1) Connect the negative (-) terminal to the battery.

   2) Turn the ignition switch to ON.

   3) Measure voltage between the terminal 1 of BUPT harness connector and chassis ground(-).

specification(voltage) : Approximately 0 V

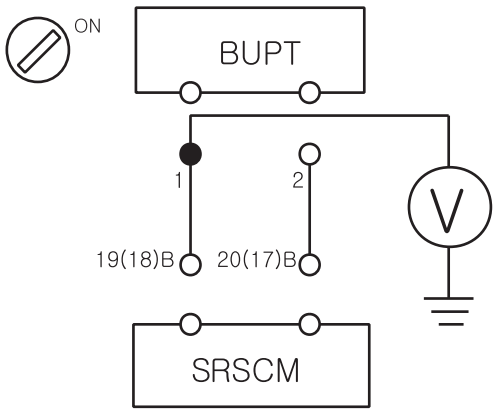

KRRE502I

Is the measured voltage within specification?

YES

▶ Check the BUPT Module.

NO

▶ Repair the short to battery line circuit on wiring harness between the BUPT and the SRSCM.

3. CHECK THE BUPT MODULE

   1) Replace the Buckle Pretensioner(BUPT) with a new one.
      ● Refer to "Buckle Pretensioner(BUPT)" section in this SERVICE MANUAL.

   2) Install the DAB module and connect the DAB connector.

   3) Connect the connectors of the PAB, SAB, CAB, BPT, BUPT, FIS and SIS.

   4) Connect the SRSCM connector.

   5) Connect the negative (-) terminal to the battery.

   6) Connect a Hi-Scan(Pro) to the data link connector.

   7) Connect a Hi-Scan(Pro) to the data link connector.
      Does Hi-Scan (Pro) indicate any DTC related to Buckle Pretensioner(BUPT)?

YES

▶ Go to next step.

NO

▶ Replace BUPT module.

4. CLEAR THE DTC AND CHECK THE VEHICLE AGAIN
   Refer to DTC B1328

DTC B2500 SRS SRI (WARNING LAMP) FAILURE

DTC DESCRIPTION EED1F698

The SRS warning lamp is located in the cluster. When the airbag system is normal, the SRS SRI flashes for approx. 6 seconds after the ignition switch is turned " ON ", and then turns off automatically.If there is a malfunction in the airbag system, the SRS SRI lights up to inform the driver of the abnormality.The SRSCM shall measure the voltage at the SRS SRI output pin, both when the lamp is on and when the lamp is off, to detect whether the commanded state matches the actual state.

DTC DETECTING CONDITION EBDAEA5E

DTC	Condition	Probable cause
B2500	• Airbag fuse • Warning Lamp Bulb • Open between warning lamp and SRSCM • Short to ground or battery line between the warning lamp and SRSCM • SRSCM Malfunction	• Fuse • Warning lamp bulb • Wiring Harness • SRSCM

SCHEMATIC DIAGRAM E4C05057

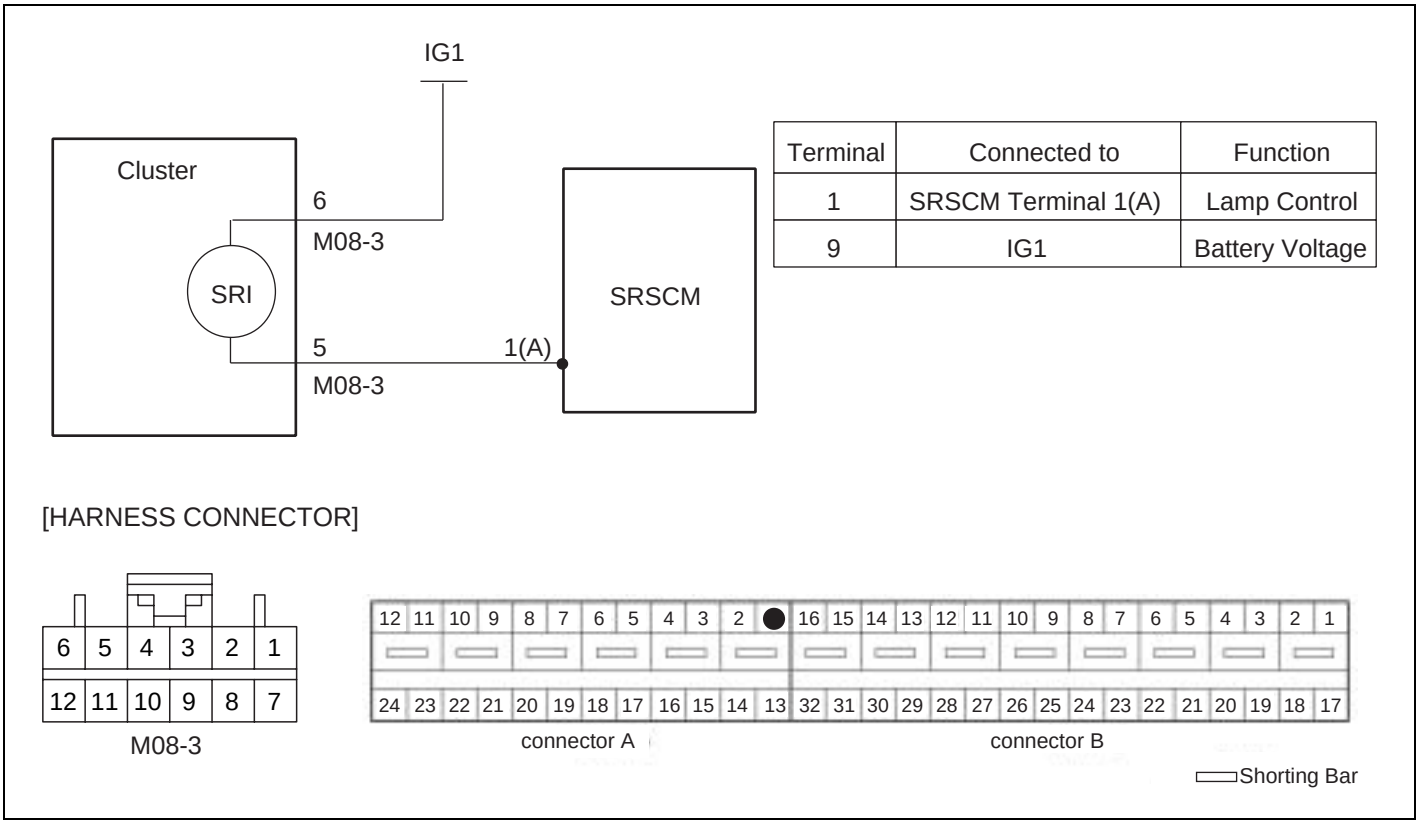

Terminal	Connected to	Function
1	SRSCM Terminal 1(A)	Lamp Control
9	IG1	Battery Voltage

ERRF501G

TERMINAL & CONNECTOR INSPECTION EE409ECF

Refer to DTC B1101.

INSPECTION PROCEDURE E07CB7A9

1. PREPARATION
   Refer to DTC B1101.

2. CHECK THE FUSE

   1) Remove the airbag fuse and the airbag warning lamp fuse from junction block.

   2) Inspect the fuses.
      Are the fuses normal?

      YES

      ▶ Check the warning lamp bulb.

      NO

      ▶ Repair or replace the fuses.

3. CHECK THE WARNING LAMP BULB

   1) Remove the bulb from the instrument cluster.

   2) Inspect the bulb.
      Is the bulb normal?

      YES

      ▶Check source voltage.

      NO

      ▶ Repair or replace the bulb.

4. CHECK SOURCE VOLTAGE

   1) Connect the negative (-) terminal to the battery.

   2) Turn the ignition switch to ON.

   3) Measure voltage between the terminal 6 of the instrument Cluster harness connector and chassis ground(-).

specification(voltage) : 9 ~ 16 V

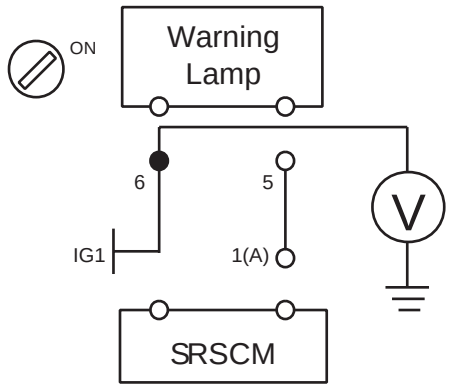

ERRF501H

Is the measured voltage within specification?

YES

▶Check short to battery line.

NO

▶Repair or replace the wiring harness between ignition switch and the Warning Lamp.

5. CHECK SHORT TO BATTERY LINE

1) Measure voltage between the terminal 5 of the instrument Cluster harness connector and chassis ground(-).

specification(voltage) : Approximately 0 V

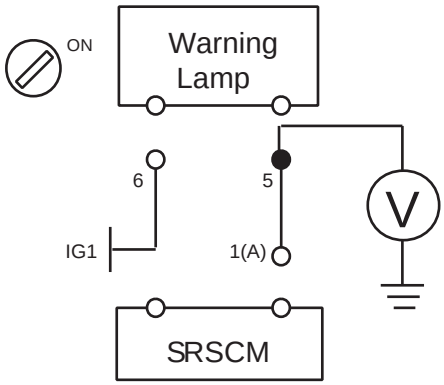

ERRF501I

Is the measured voltage within specification?

YES

▶ Check short or short to ground.

NO

▶ Repair the short to battery line circuit on wiring harness between the SRSCM and the Warning Lamp.

6. CHECK SHORT OR SHORT TO GROUND

1) Turn the ignition switch to LOCK.

2) Disconnect the negative(-) terminal from the battery.

3) Measure resistance between the terminal 5 of the instrument cluster harness connector and chassis ground.

4) Measure resistance between the terminal 5 and 6 of the Instrument Cluster harness connector.

specification(resistance) : infinite

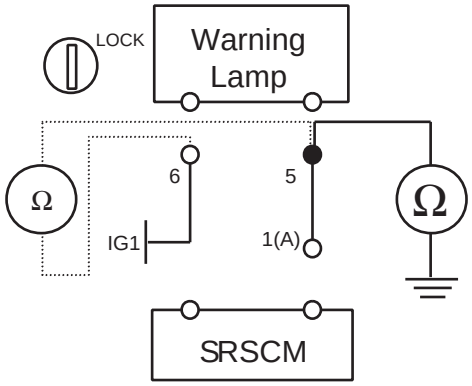

ERRF501J

Is the measured resistance within specification?

YES

▶Check open circuit.

NO

▶ Repair the short or short to ground circuit on wiring harness between the SRSCM and the Warning Lamp.

7. CHECK OPEN CIRCUIT

1) Measure resistance between the terminal 5 of the Instrument Cluster connector and the terminal 1 of SRSCM harness connector(A).

specification(resistance) : below 1 Ω

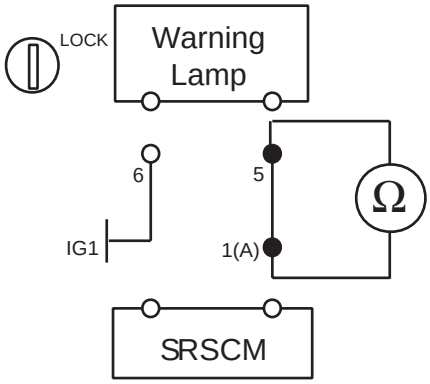

ERRF501S

Is the measured resistance within specification?

YES

▶ Go to next step.

NO

▶ Repair the open circuit on wiring harness between the SRSCM and the Warning Lamp.

8. CLEAR THE DTC AND CHECK THE VEHICLE AGAIN
Refer to DTC B1328

DTC B2505 PASSENGER AIRBAG DISABLE LAMP FAILURE

DTC DESCRIPTION E030919C

The Passenger airbag disable(PAD) lamp is located in the cluster. An on-off switch allows an passenger air bag to be turned on and off. The on-off switch can be installed for the passenger. When the PAD lamp is turned off, enable to inflate passenger airbag.

DTC DETECTING CONDITION E12C96BC

DTC	Condition	Probable cause
B2505	• Airbag fuse • PAD Lamp Bulb • Open between PAD lamp and SRSCM • Short to ground or battery line between the PAD lamp and SRSCM • SRSCM Malfunction	• Fuse • PAD lamp bulb • Wiring Harness • SRSCM

SCHEMATIC DIAGRAM EE3CCA7A

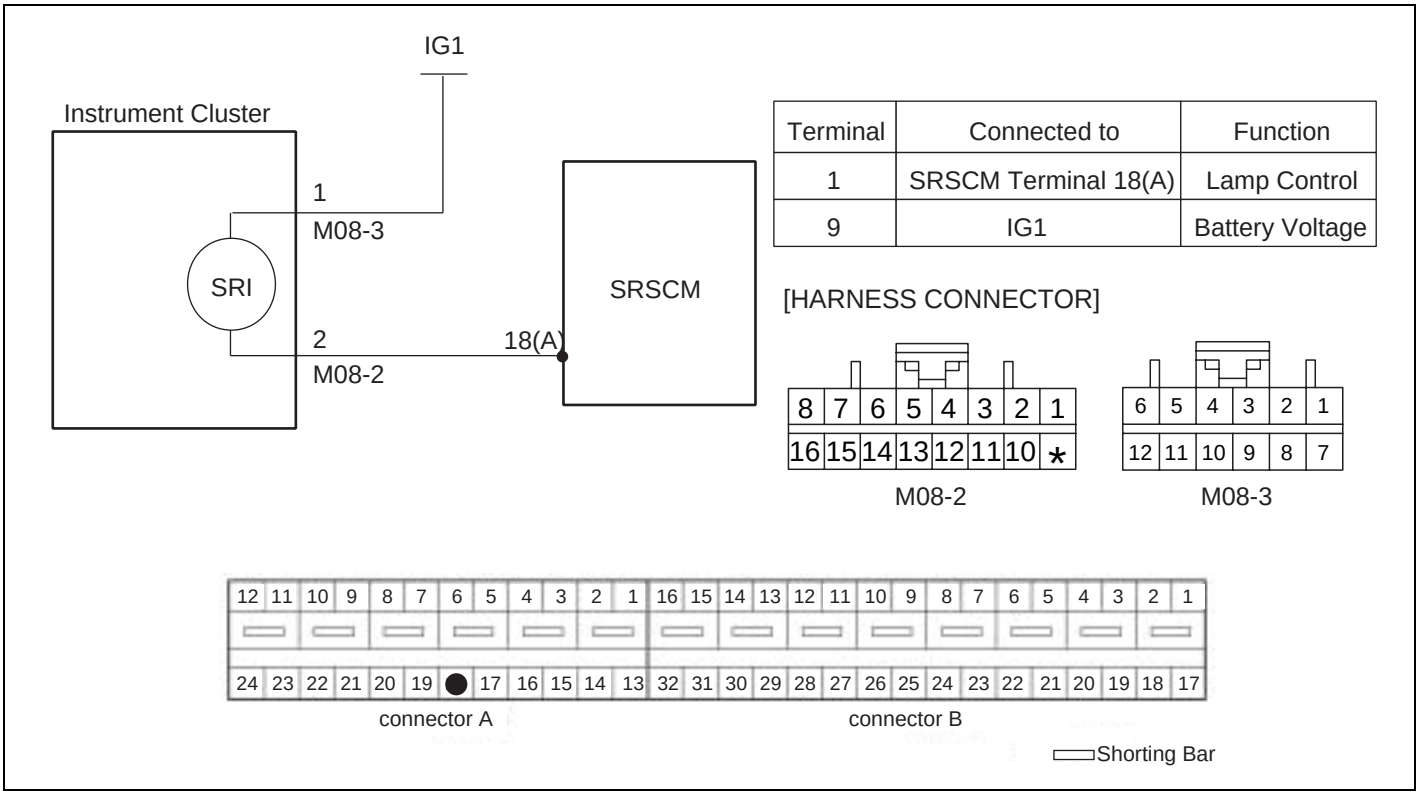

Terminal	Connected to	Function
1	SRSCM Terminal 18(A)	Lamp Control
9	IG1	Battery Voltage

ERRF502O

TERMINAL & CONNECTOR INSPECTION EEBFD3E6

Refer to DTC B1101.

INSPECTION PROCEDURE EAB30DFC

1. PREPARATION
   Refer to DTC B1101.

2. CHECK THE FUSE

1) Remove the airbag fuse and the PAD lamp fuse from junction block.

2) Inspect the fuses.
Are the fuses normal?

YES

▶ Check the PAD lamp bulb.

NO

▶ Repair or replace the fuses.

3. CHECK THE PAD LAMP BULB

1) Remove the bulb from the instrument cluster.

2) Inspect the bulb.
Is the bulb normal?

YES

▶Check source voltage.

NO

▶ Repair or replace the bulb.

4. CHECK SOURCE VOLTAGE

1) Connect the negative (-) terminal to the battery.

2) Turn the ignition switch to ON.

3) Measure voltage between the terminal 1 of the instrument Cluster(M08–3) harness connector and chassis ground(-).

specification(voltage) : 9 ~ 16 V

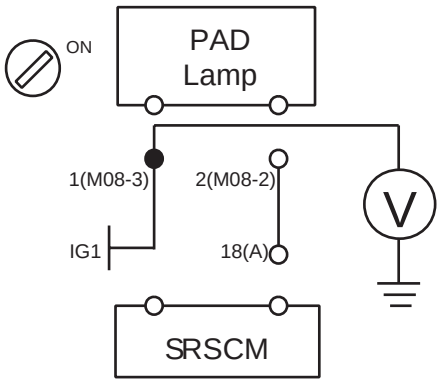

ERRF502P

Is the measured voltage within specification?

YES

▶Check short to battery line.

NO

▶ Repair or replace the wiring harness between ignition switch and the PAD Lamp.

5. CHECK SHORT TO BATTERY LINE

1) Measure voltage between the terminal 2 of the instrument Cluster(M08–2) harness connector and chassis ground(-).

specification(voltage) : Approximately 0 V

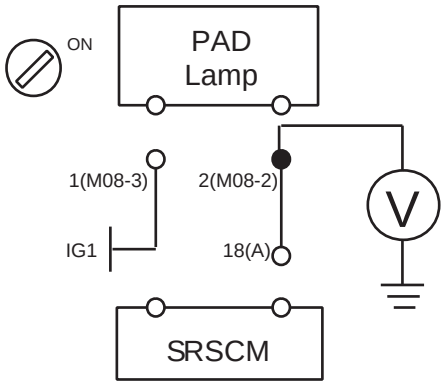

ERRF502Q

Is the measured voltage within specification?

YES

▶ Check short or short to ground.

NO

▶ Repair the short to battery line circuit on wiring harness between the SRSCM and the PAD Lamp.

6. CHECK SHORT OR SHORT TO GROUND

1) Turn the ignition switch to LOCK.

2) Disconnect the negative(-) terminal from the battery.

3) Measure resistance between the terminal 2 of the instrument cluster(M08–2) harness connector and chassis ground.

4) Measure resistance between the terminal 1(M08–3) and 2(M08–2) of the Instrument Cluster harness connector.

specification(resistance) : infinite

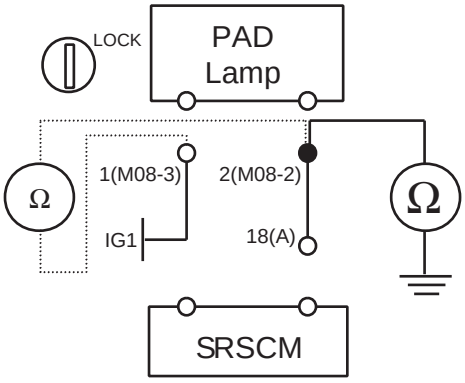

ERRF502R

Is the measured resistance within specification?

YES

▶Check open circuit.

NO

▶ Repair the short or short to ground circuit on wiring harness between the SRSCM and the PAD Lamp.

7. CHECK OPEN CIRCUIT

1) Measure resistance between the terminal 2 of the Instrument Cluster(M08–2) connector and the terminal 18 of SRSCM harness connector(A).

specification(resistance) : below 1 Ω

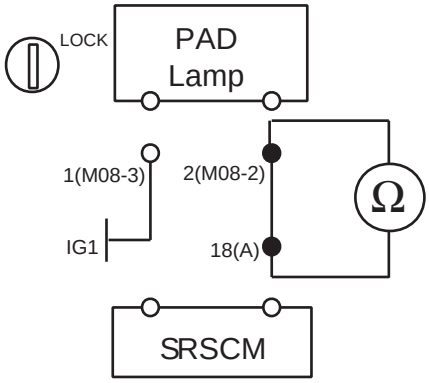

ERRF502S

Is the measured resistance within specification?

YES

▶ Go to next step.

NO

▶ Repair the open circuit on wiring harness between the SRSCM and the PAD Lamp.

8. CLEAR THE DTC AND CHECK THE VEHICLE AGAIN
Refer to DTC B1328

AIR BAG MODULE DISPOSAL

AIRBAG DISPOSAL E3D44BEF

SPECIAL TOOL REQUIRED

Deployment tool 0957A-34100A

Before scrapping any airbags or side airbags (including those in a whole vehicle to be scrapped), the airbags or side airbags must be deployed. If the vehicle is still within the warranty period, before deploying the airbags or side airbags, the Technical Manager must give approval and/or special instruction. Only after the airbags or side airbags have been deployed (as the result of vehicle collision, for example), can they be scrapped.
If the airbags or side airbags appear intact (not deployed), treat them with extreme caution. Follow this procedure.

DEPLOYING AIRBAGS IN THE VEHICLE

If an SRS equipped vehicle is to be entirely scrapped, its airbags or side airbags should be deployed while still in thevehicle. The airbags or side airbags should not be considered as salvageable parts and should never be installed in another vehicle.

1. Turn the ignition switch OFF, and disconnect the battery negative cable and wait at least three minutes.
2. Confirm that each airbag or side airbag are securely mounted.
3. Confirm that the special tool is functioning properly by following the check procedure.

DRIVER'S AIRBAG :

1. Remove the driver's airbag and the install the SST(0957A-38500).
2. Install the driver's airbag on the steering wheel.

FRONT PASSENGER'S AIRBAG :

1. Remove the glove box, then disconnect the 2P connector between the front passenger's airbag and SRS main harness.
2. Install the SST(0957A-38100).

SIDE AIRBAG :

1. Disconnect the 2P connector between the side airbag and side wire harness.
2. Install the SST (0957A-38100).

CURTAIN AIRBAG :

1. Disconnect the 2P connector between the curtain airbag and wire harness.
2. Install the SST(0957A-38500).

SEAT BELT PRETENSIONER :

1. Disconnect the 2P connector from the seat belt pretensioner.
2. Install the SST(0957A-38500).

SEAT BELT BUCKLE PRETENSIONER :

1. Disconnect the connector from the seat belt buckle pretensioner.
2. Install the SST(0957A-2E210).
3. Place the deployment tool at least thirty feet (10 meters) away from the airbag.
4. Connect a 12 volt battery to the tool.
5. Push the tool's deployment switch. The airbag should deploy (deployment is both highly audible and visible: a loud noise and rapid inflation of the bag, followed by slow deflection)
6. Dispose of the complete airbag. No part of it can be reused. Place it in a sturdy plastic bag and seal it securely.

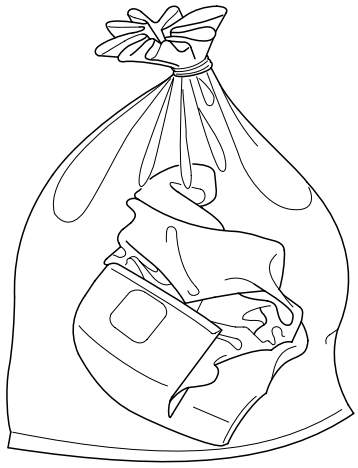

ERKD002U

DEPLOYING THE AIRBAG OUT OF THE VEHICLE

If an intact airbag has been removed from a scrapped vehicle, or has been found defective or damage during transit, storage or service, it should be deployed as follows :

1. Confirm that the special is functioning properly by following the check procedure on this page.

2. Position the airbag face up, outdoors on flat ground at least thirty feet (10meters) from any obstacles or people.

DISPOSAL OF DAMAGED AIRBAG

1. If installed in a vehicle, follow the removal procedure of driver's airbag front passenger's and side airbag.

2. In all cases, make a short circuit by twisting together the two airbag inflator wires.

3. Package the airbag in exactly the same packing that the new replacement part come in.